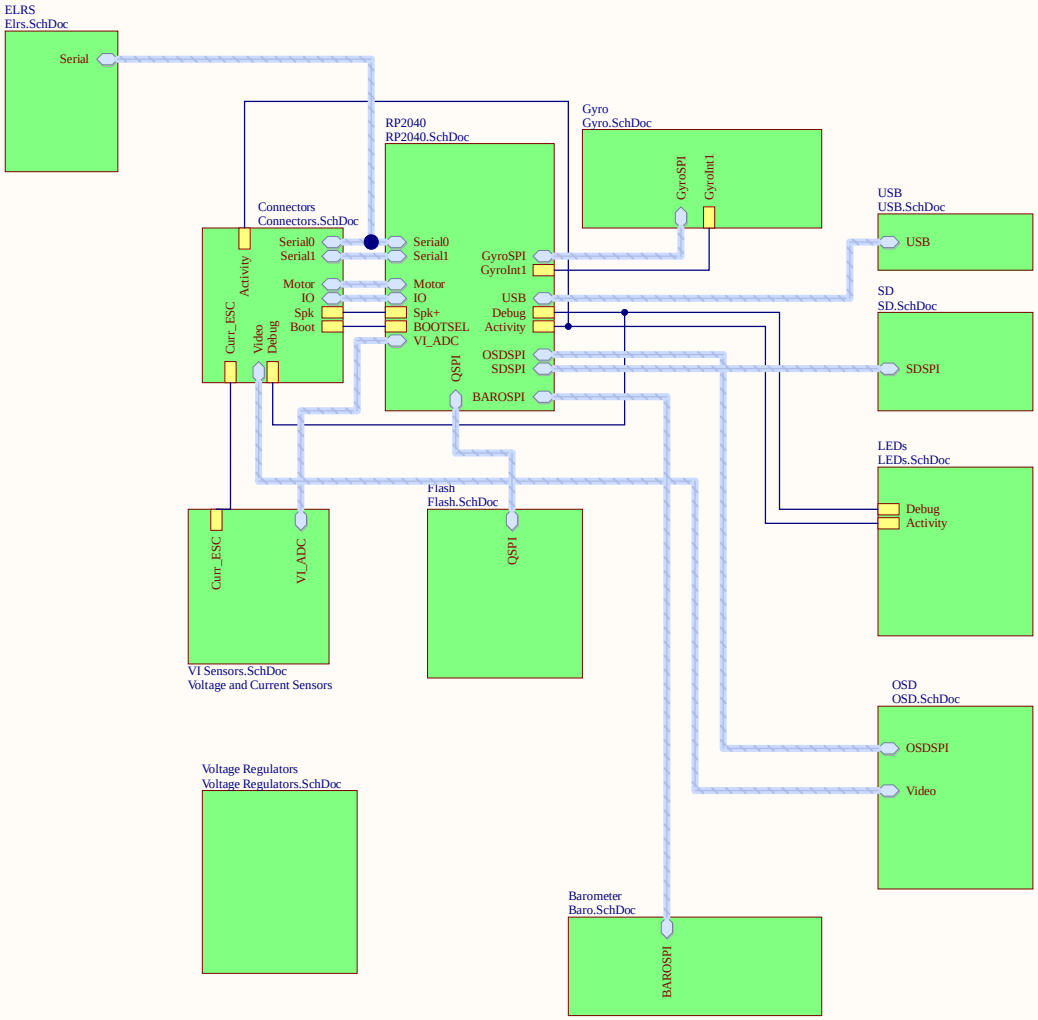

Title		
Size A3	Number	Revision
Date: 12.13.2023		Sheet of
File: D:\Dokumente\..\Main.SchDoc		Drawn By:

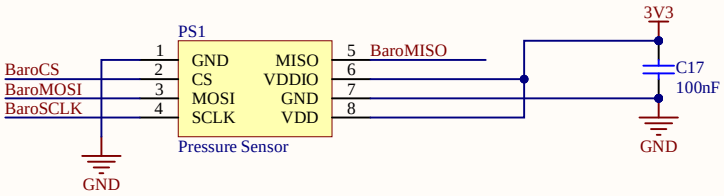

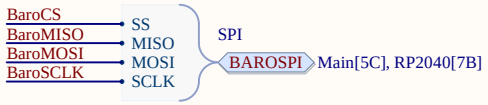

Title		
Size: A4	Number	Revision
Date: 12.13.2023		Sheet of
File: D:\Dokumente\..\Baro.SchDoc		Drawn By:

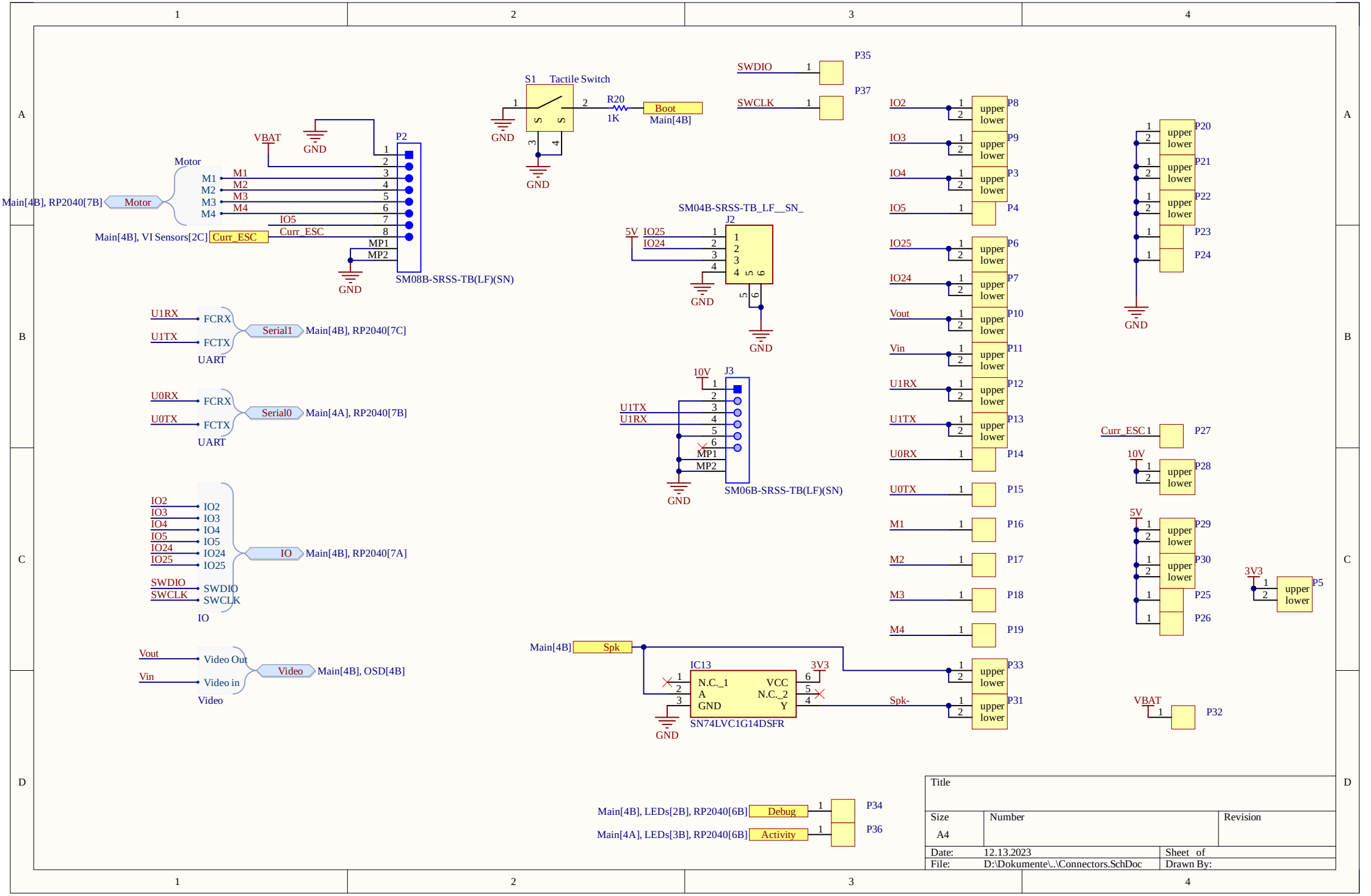
P2
VBAT
GND
Motor
M1
M2
M3
M4
Main[4B], RP2040[7B]
Motor
IO5
Curr_ESC
Main[4B], VI Sensors[2C]
Curr_ESC
MP1
MP2
SM08B-SRSS-TB(LF)(SN)
S1
Tactile Switch
R20
1K
Boot
Main[4B]
SWDIO
SWCLK
P35
P37
SM04B-SRSS-TB_LF__SN_
J2
5V
IO25
IO24
J3
10V
U1TX
U1RX
MP1
MP2
SM06B-SRSS-TB(LF)(SN)
U1RX
U1TX
FCRX
FCTX
Serial1
Main[4B], RP2040[7C]
UART
U0RX
U0TX
Serial0
Main[4A], RP2040[7B]
IO2
IO3
IO4
IO5
IO24
IO25
SWDIO
SWCLK
IO
Main[4B], RP2040[7A]
Vout
Vin
Video Out
Video in
Video
Main[4B], OSD[4B]
Main[4B]
Spk
IC13
3V3
N.C._1
A
GND
VCC
N.C._2
Y
SN74LVC1G14DSFR
Spk-
P8
P9
P3
P4
P6
P7
P10
P11
P12
P13
P14
P15
P16
P17
P18
P19
P33
P31
P20
P21
P22
P23
P24
P27
P28
P29
P30
P25
P26
P5
P32
Main[4B], LEDs[2B], RP2040[6B]
Debug
Main[4A], LEDs[3B], RP2040[6B]
Activity
P34
P36
upper
lower
Title
Size
A4
Number
Revision
Date:
12.13.2023
Sheet of
File:
D:\Dokumente\..\Connectors.SchDoc
Drawn By:

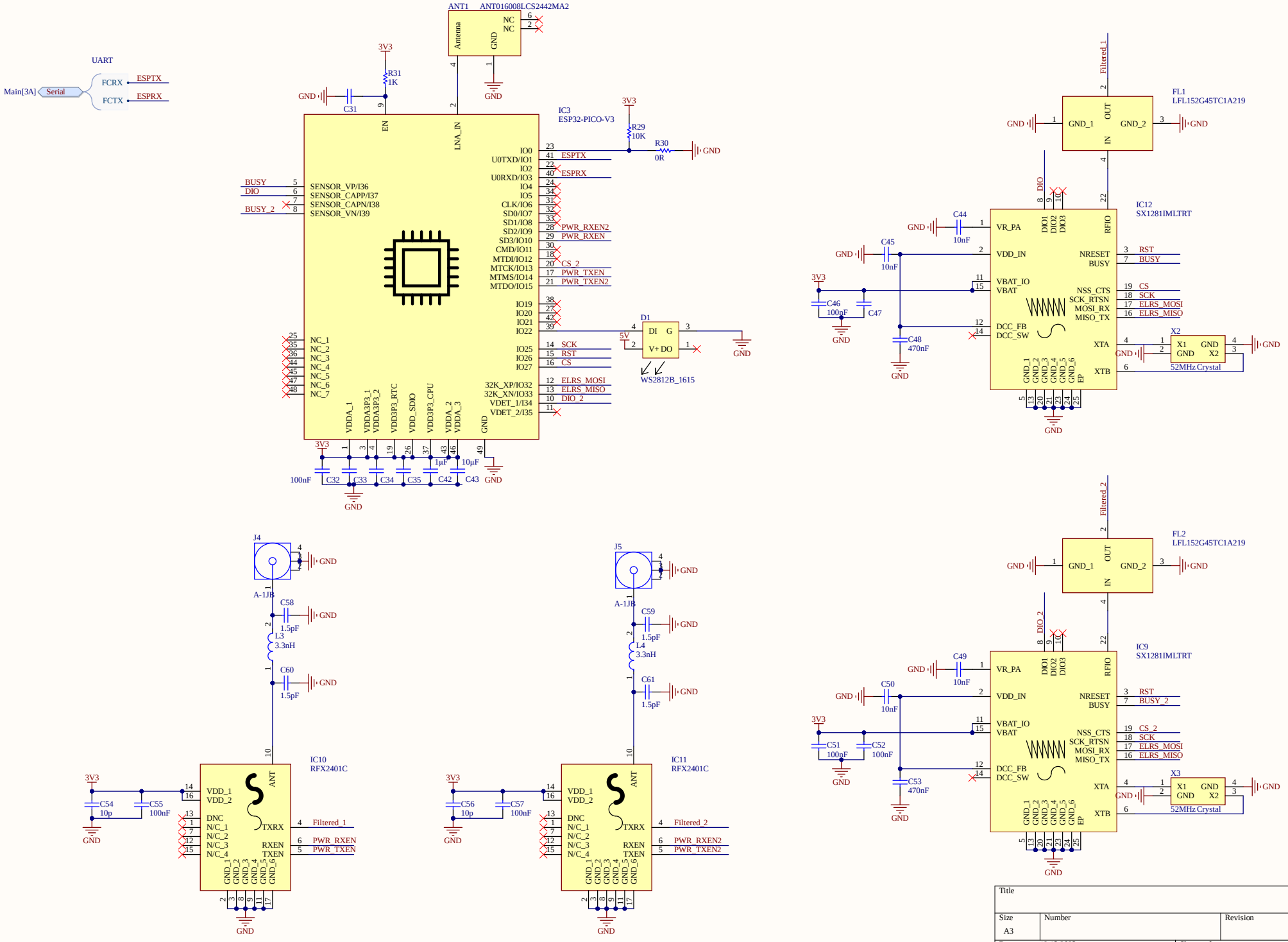
UART
Main[3A]
Serial
FCRX
FCTX
ESPTX
ESPRX
ANT1
ANT016008LCS2442MA2
Antenna
GND
NC
NC
3V3
R31
1K
C31
IC3
ESP32-PICO-V3
EN
LNA_IN
R29
10K
R30
0R
BUSY
DIO
BUSY_2
SENSOR_VP/I36
SENSOR_CAPP/I37
SENSOR_CAPN/I38
SENSOR_VN/I39
IO0
U0TXD/IO1
IO2
U0RXD/IO3
IO4
IO5
CLK/IO6
SD0/IO7
SD1/IO8
SD2/IO9
SD3/IO10
CMD/IO11
MTDI/IO12
MTCK/IO13
MTMS/IO14
MTDO/IO15
PWR_RXEN2
PWR_RXEN
CS_2
PWR_TXEN
PWR_TXEN2
IO19
IO20
IO21
IO22
IO25
IO26
IO27
SCK
RST
CS
ELRS_MOSI
ELRS_MISO
DIO_2
32K_XP/IO32
32K_XN/IO33
VDET_1/I34
VDET_2/I35
NC_1
NC_2
NC_3
NC_4
NC_5
NC_6
NC_7
VDDA_1
VDDA3P3_1
VDDA3P3_2
VDD3P3_RTC
VDD_SDIO
VDD3P3_CPU
VDDA_2
VDDA_3
D1
DI G
V+ DO
5V
WS2812B_1615
C32
C33
C34
C35
C42
C43
100nF
1µF
10µF
FL1
LFL152G45TC1A219
GND_1
OUT
GND_2
IN
Filtered_1
IC12
SX1281IMLTRT
VR_PA
VDD_IN
VBAT_IO
VBAT
DCC_FB
DCC_SW
DIO1
DIO2
DIO3
RFIO
NRESET
BUSY
NSS_CTS
SCK_RTSN
MOSI_RX
MISO_TX
XTA
XTB
GND_1
GND_2
GND_3
GND_4
GND_5
GND_6
EP
C44
C45
C46
C47
C48
10nF
100nF
470nF
X2
X1
GND
X2
52MHz Crystal
J4
J5
A-1JB
C58
C59
C60
C61
1.5pF
L3
L4
3.3nH
IC10
IC11
RFX2401C
VDD_1
VDD_2
DNC
N/C_1
N/C_2
N/C_3
N/C_4
ANT
TXRX
RXEN
TXEN
C54
C55
C56
C57
10p
100nF
Filtered_1
Filtered_2
PWR_RXEN
PWR_TXEN
PWR_RXEN2
PWR_TXEN2
FL2
LFL152G45TC1A219
IC9
SX1281IMLTRT
BUSY_2
C49
C50
C51
C52
C53
X3
Title
Size
A3
Number
Revision
Date:
12.13.2023
Sheet of
File:
D:\Dokumente\..\ELRS.SchDoc
Drawn By:

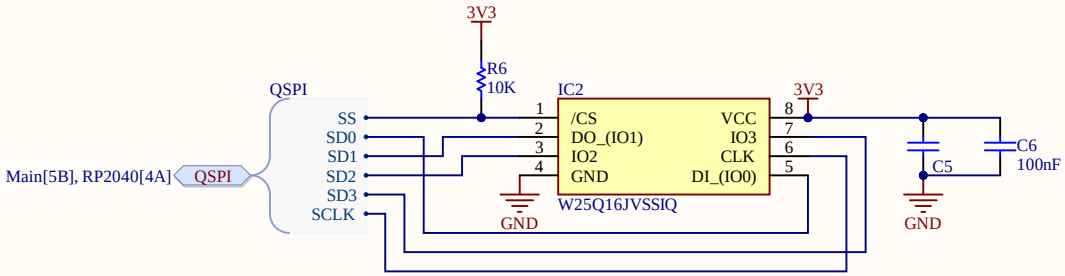

Title			
Size A4	Number		Revision
Date:	12.13.2023	Sheet of	
File:	D:\Dokumente\..\Flash.SchDoc	Drawn By:	

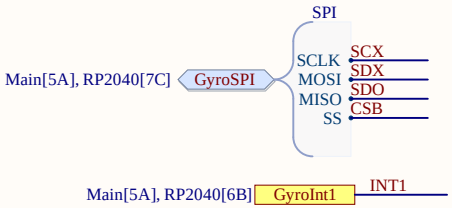

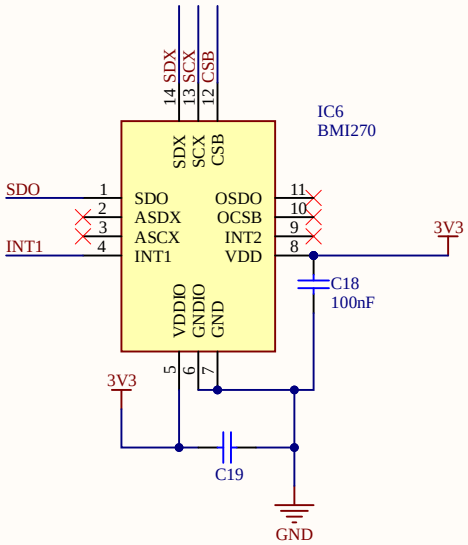

Title			
Size A4	Number		Revision
Date:	12.13.2023	Sheet of	
File:	D:\Dokumente\..\Gyro.SchDoc	Drawn By:	

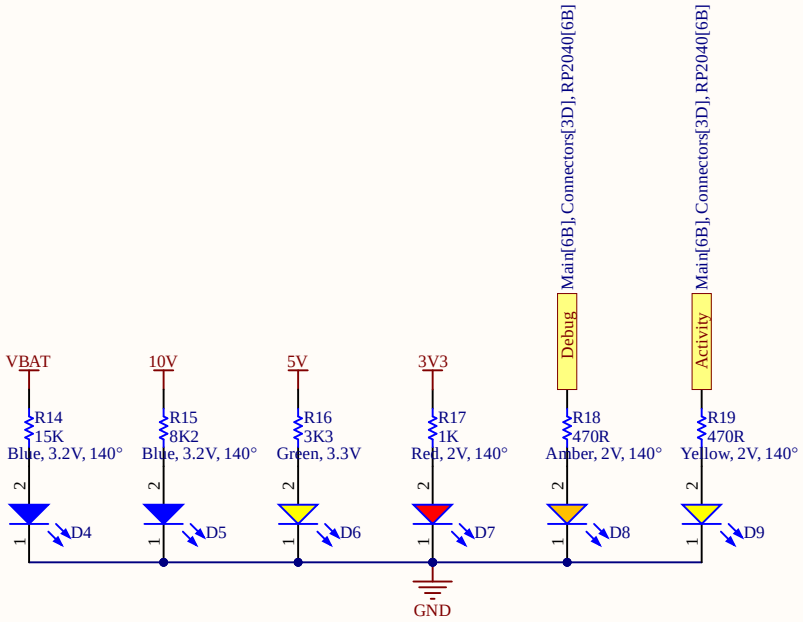

Title			
Size A4	Number		Revision
Date:	12.13.2023	Sheet of	
File:	D:\Dokumente\..\LEDs.SchDoc	Drawn By:	

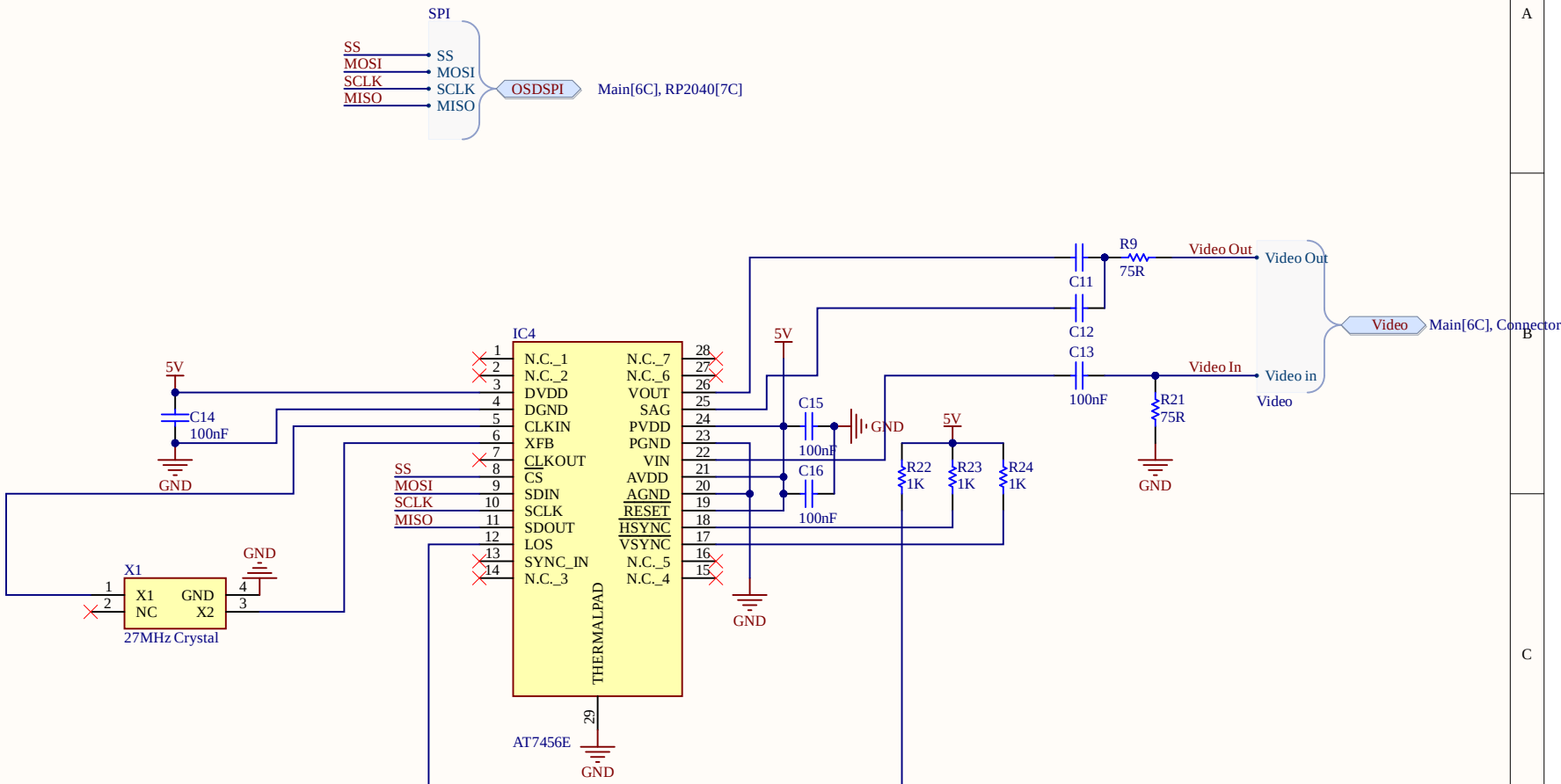

Title		
Size A4	Number	Revision
Date: 12.13.2023		Sheet of
File: D:\Dokumente\..\OSD.SchDoc		Drawn By:

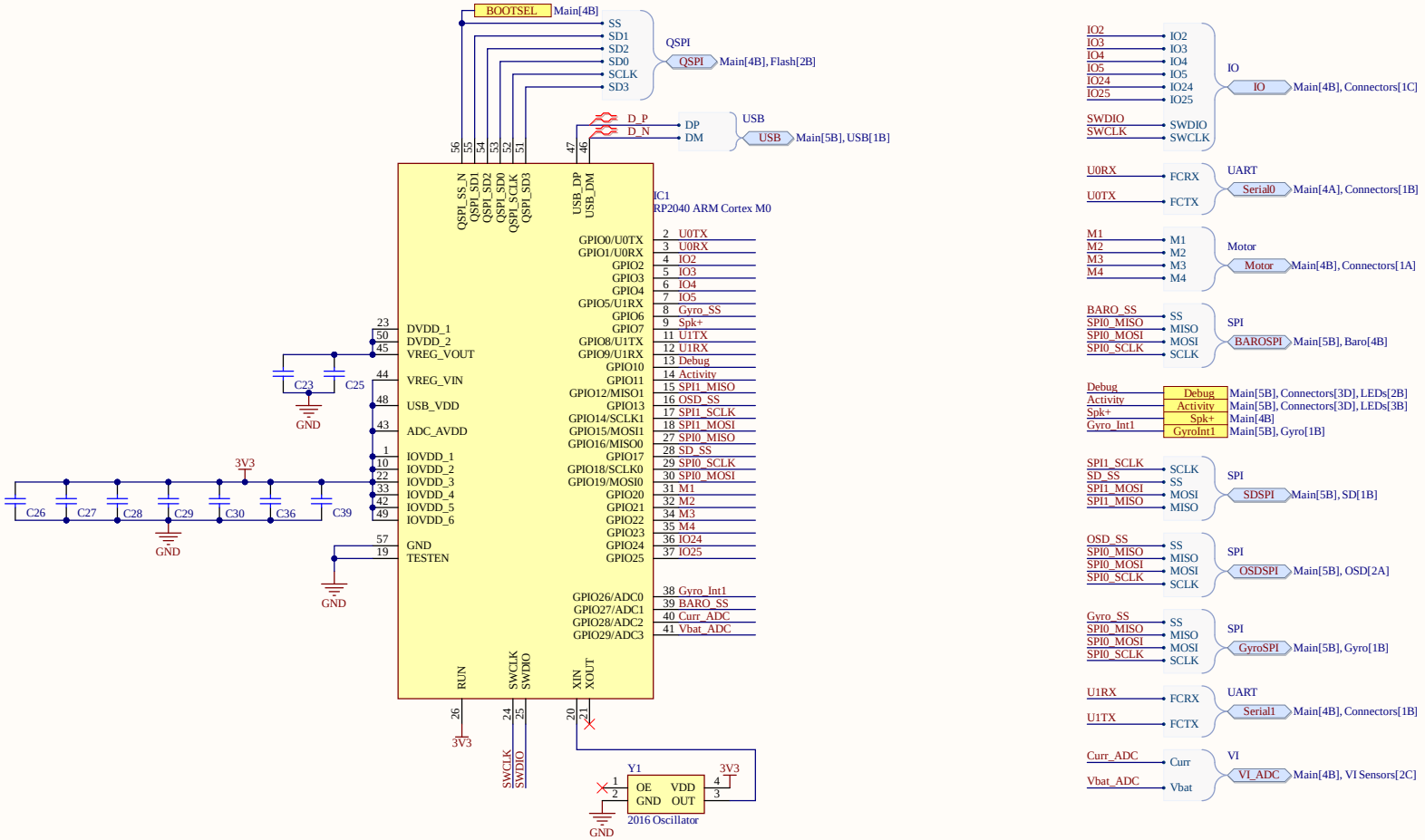

Title		
Size: A3	Number	Revision
Date: 12.13.2023		Sheet of
File: D:\Dokumente\...\RP2040.SchDoc		Drawn By:

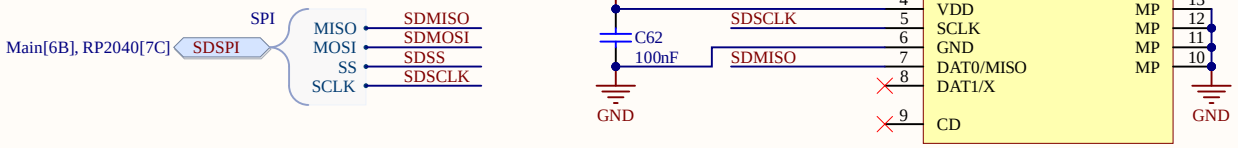

Title		
Size: A4	Number	Revision
Date: 12.13.2023		Sheet of
File: D:\Dokumente\..\SD.SchDoc		Drawn By:

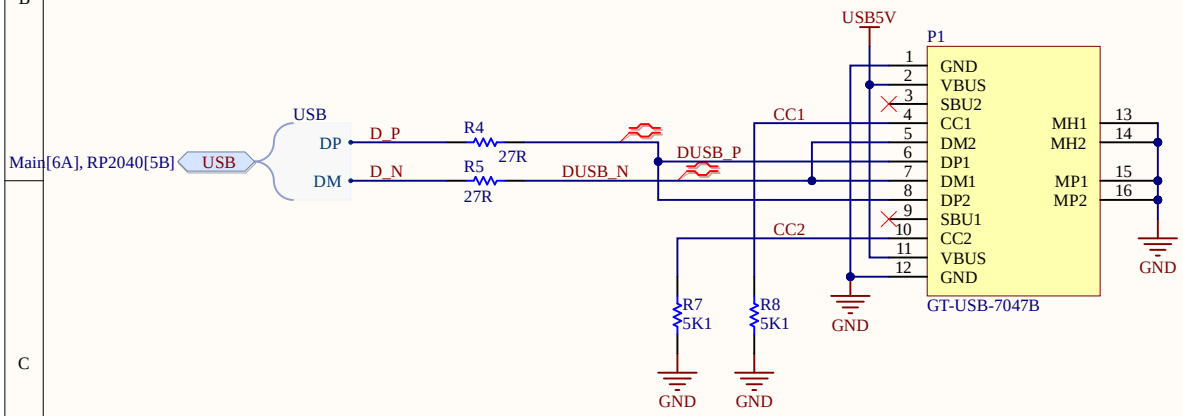

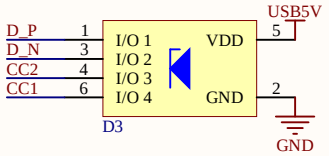

Title		
Size: A4	Number	Revision
Date: 12.13.2023		Sheet of
File: D:\Dokumente\..\USB.SchDoc		Drawn By:

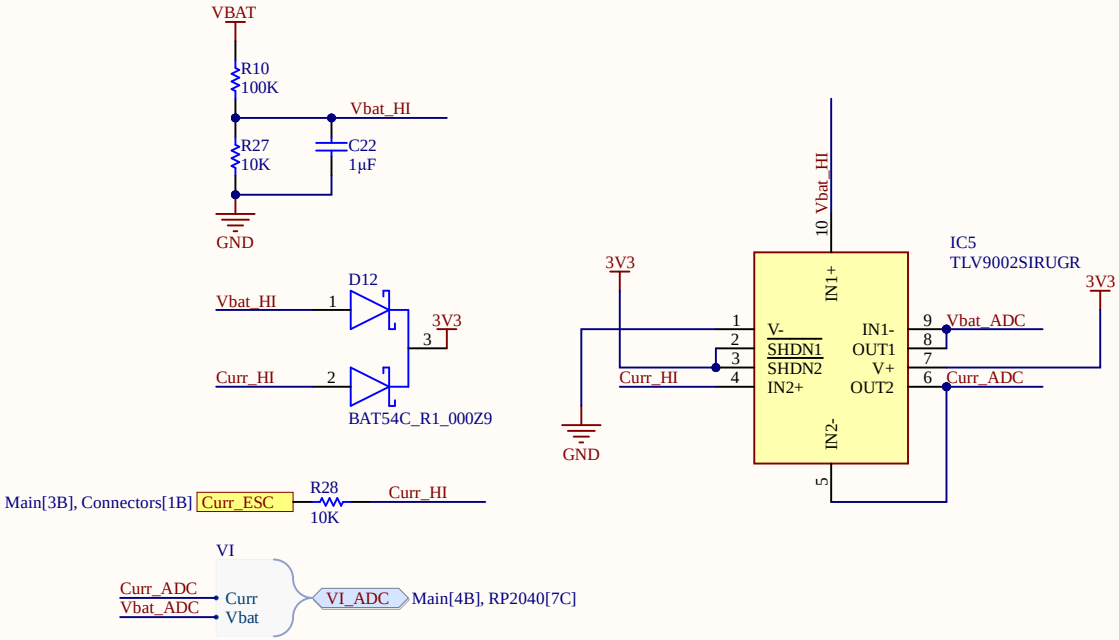

Title		
Size: A4	Number	Revision
Date: 12.13.2023		Sheet of
File: D:\Dokumente\..\VI Sensors.SchDoc		Drawn By:

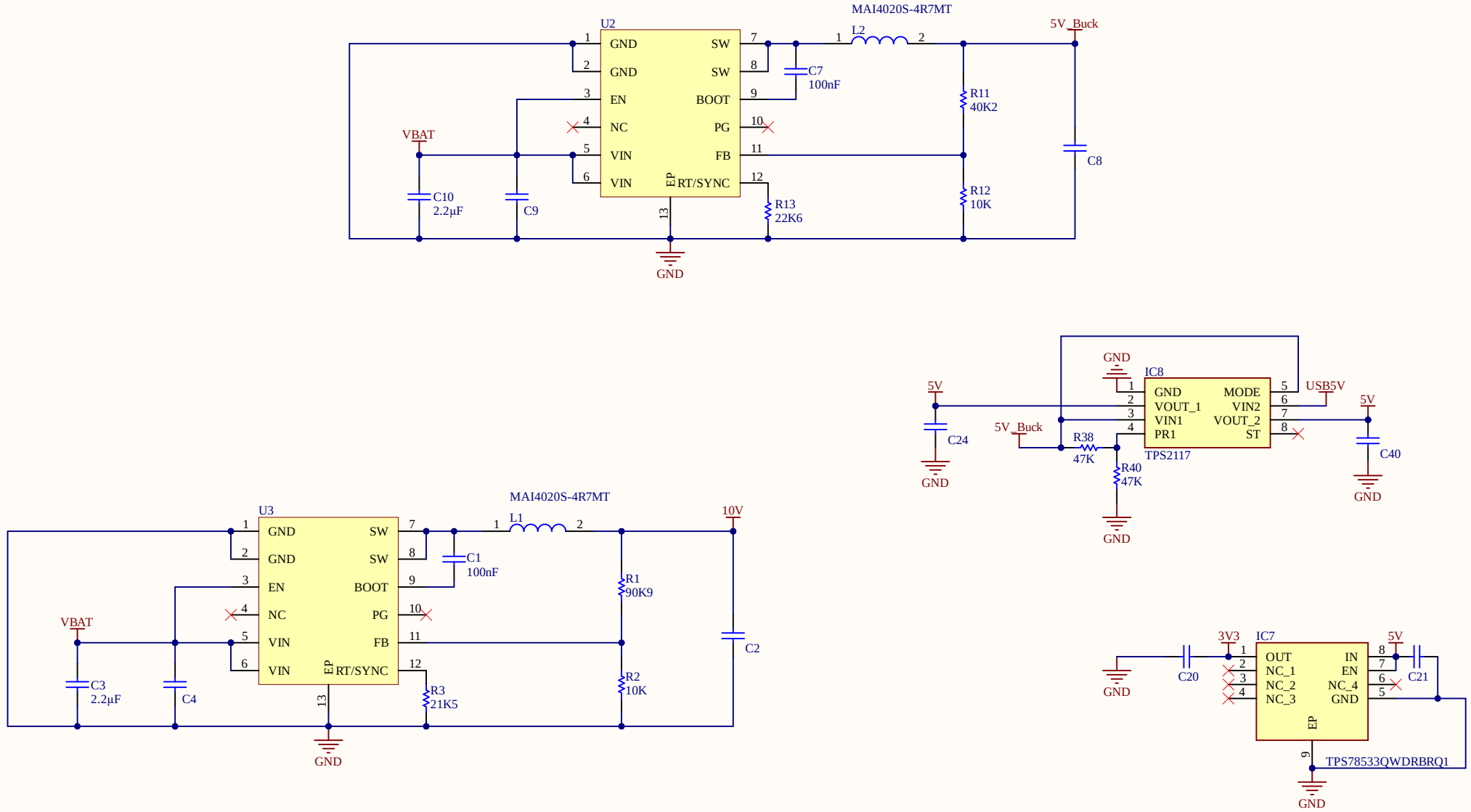

Title		
Size A4	Number	Revision
Date: 12.13.2023		Sheet of
File: D:\Dokumente\..\Voltage Regulators.SchDoc		Drawn By:

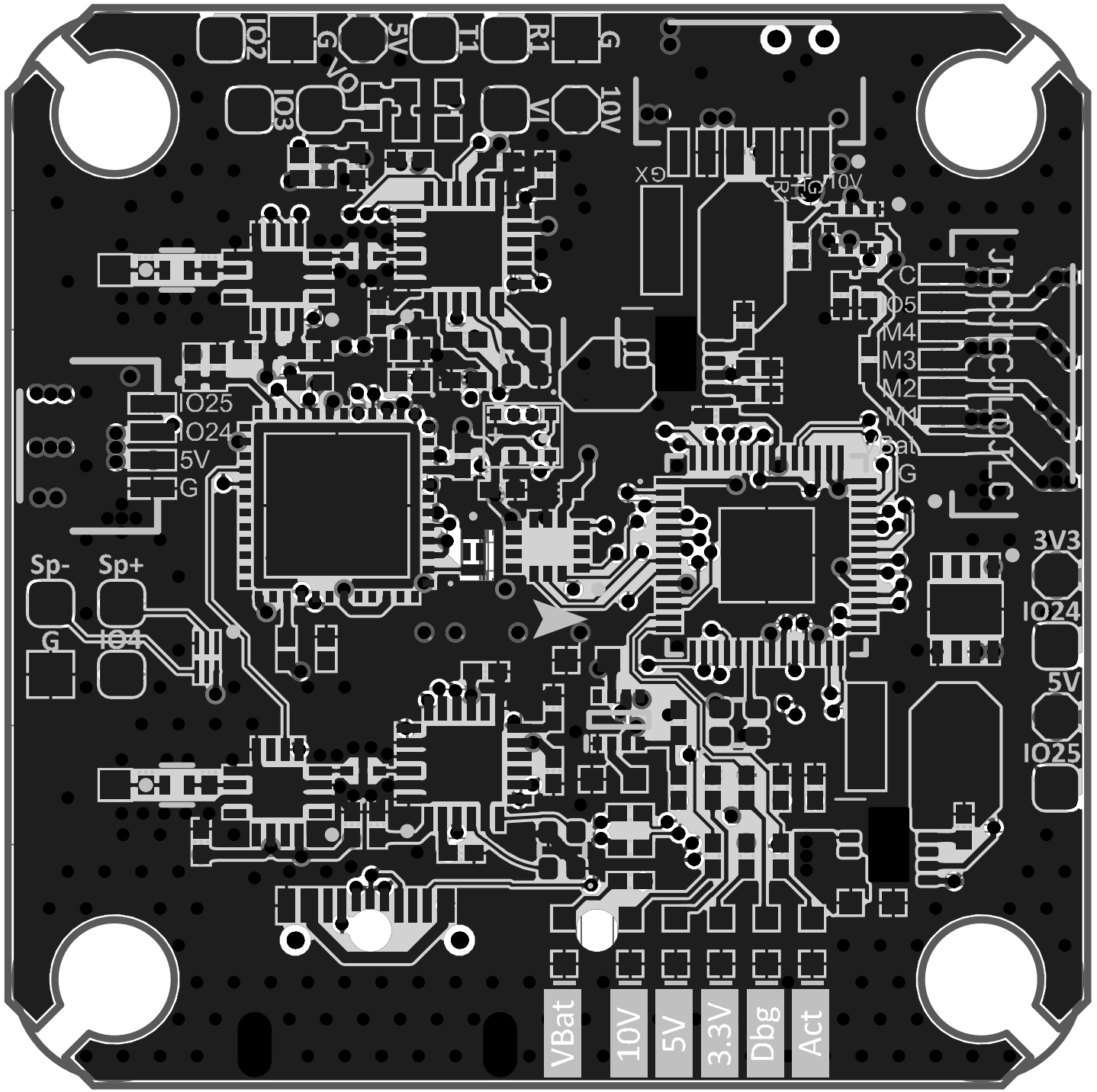
IO2
G
5V
T1
R1
G
VO
IO3
VI
10V
GX
R1
G
10V
C
IO5
M4
M3
M2
M1
Vbat
G
IO25
IO24
5V
G
Sp-
Sp+
G
IO4
3V3
IO24
5V
IO25
VBat
10V
5V
3.3V
Dbg
Act

Board Stack Report