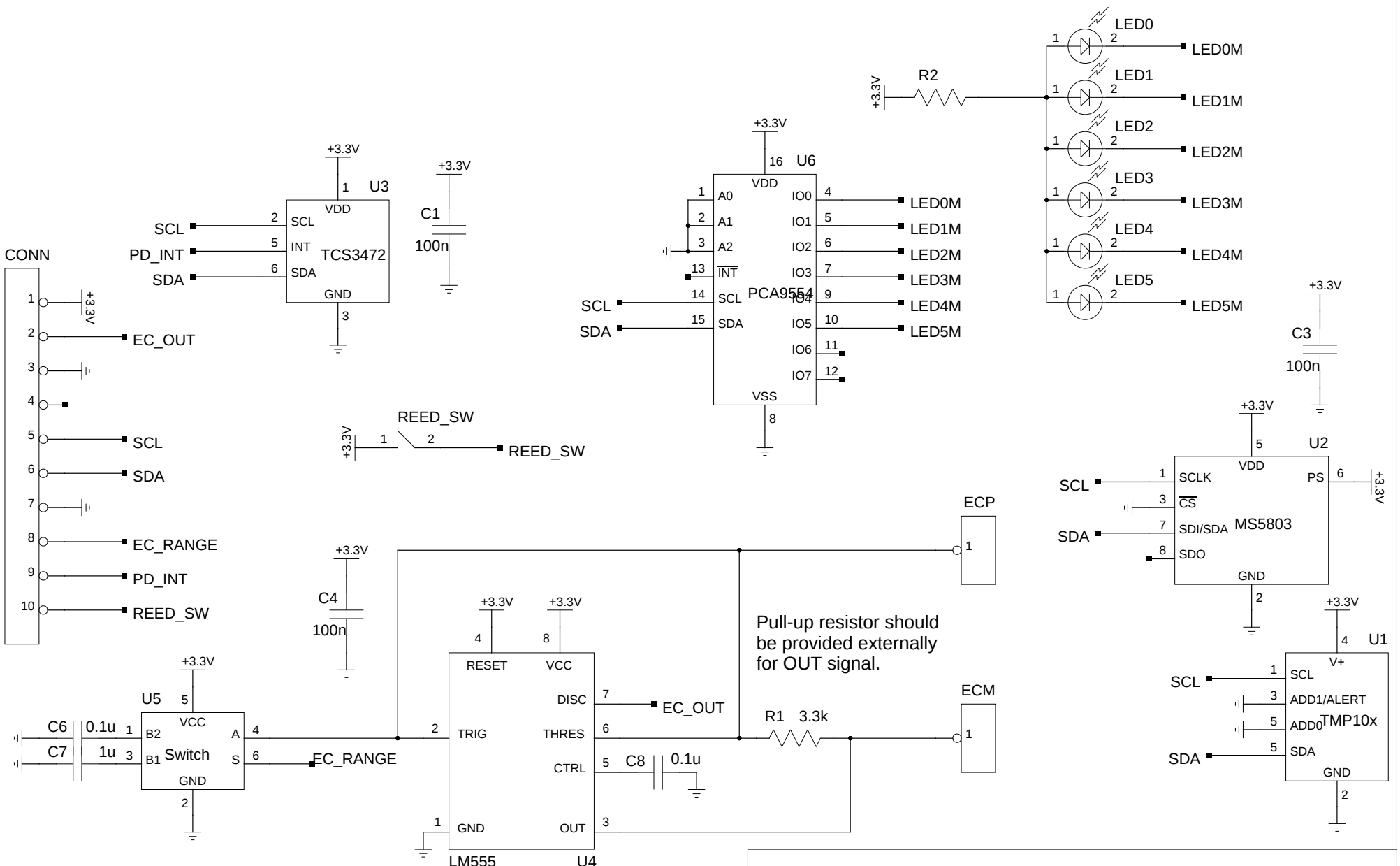

TITLE Remote sensor board

FILE:	REVISION:
PAGE OF	DRAWN BY: