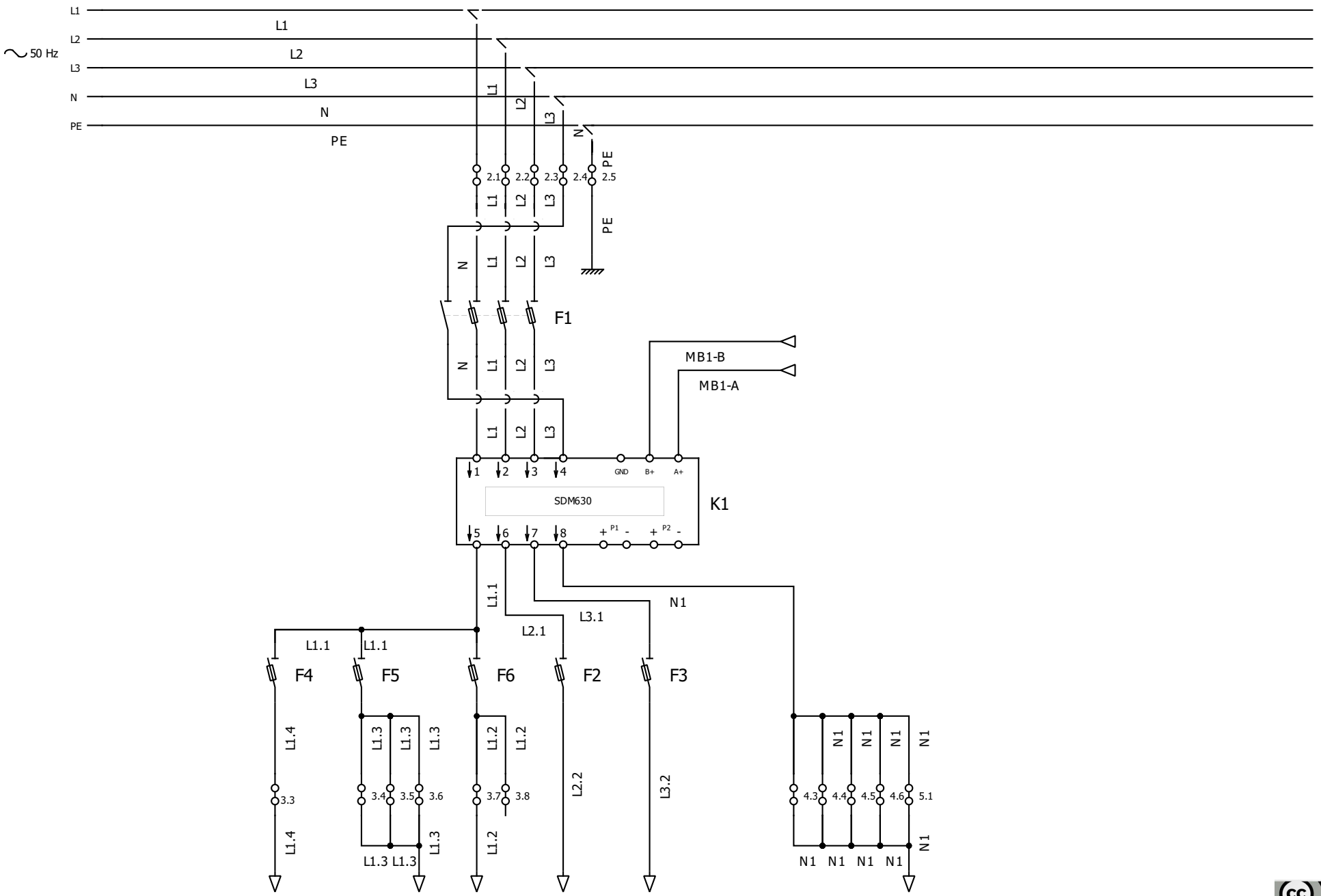

BY-NC-ND

9.3.2020 г.	Orlin Dimitrov				POLYGONTEAM LTD SOLUTIONS FOR EVERYONE	PROJET: Zontromat OBJET: Main Power MODEL: OfficeCab-Type1-L1	CLIENT: BCVT
9.3.2020 г.	NAME	APPD	REVISION	10	Title: Main Power		
DESIGN:		CHKD		APPD		File: Main Power	1/15
File: Main Power							

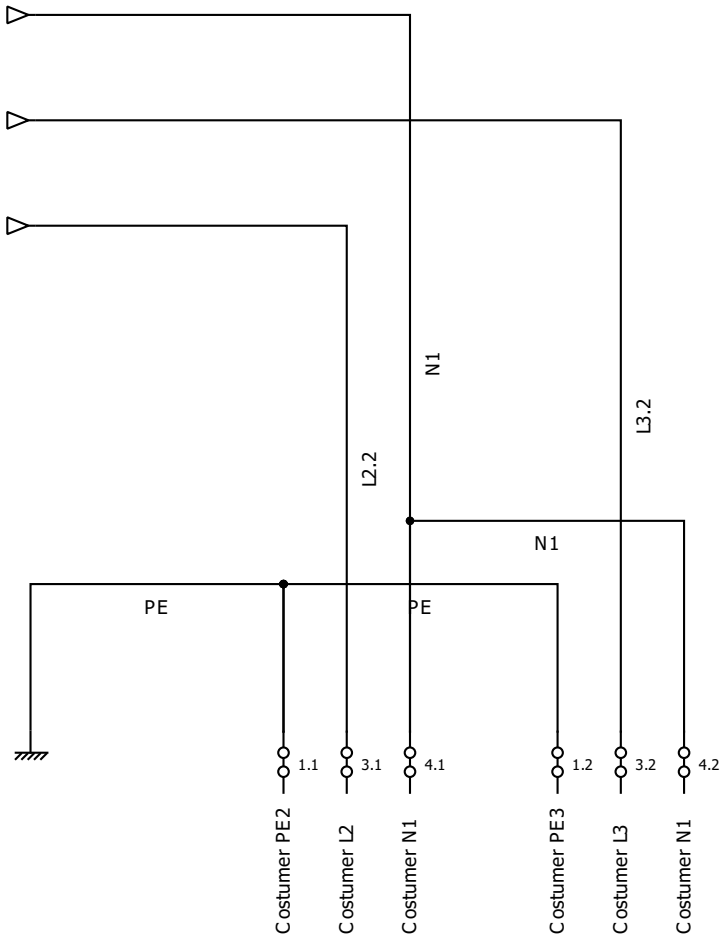

BY-NC-ND

30.10.2020 г.	Orlin Dimitrov				POLYGONTEAM LTD SOLUTIONS FOR EVERYONE	PROJET: BCVT OBJET: %title MODEL: OfficeCab-Type1-L1	CLIENT: BCVT
30.10.2020 г.	NAME	APPD	REVISION	10	Title: Clients Terminals		
DESIGN:		CHKD		APPD			File: Room Cabinet 3P 2/15
File: Room Cabinet 3P							

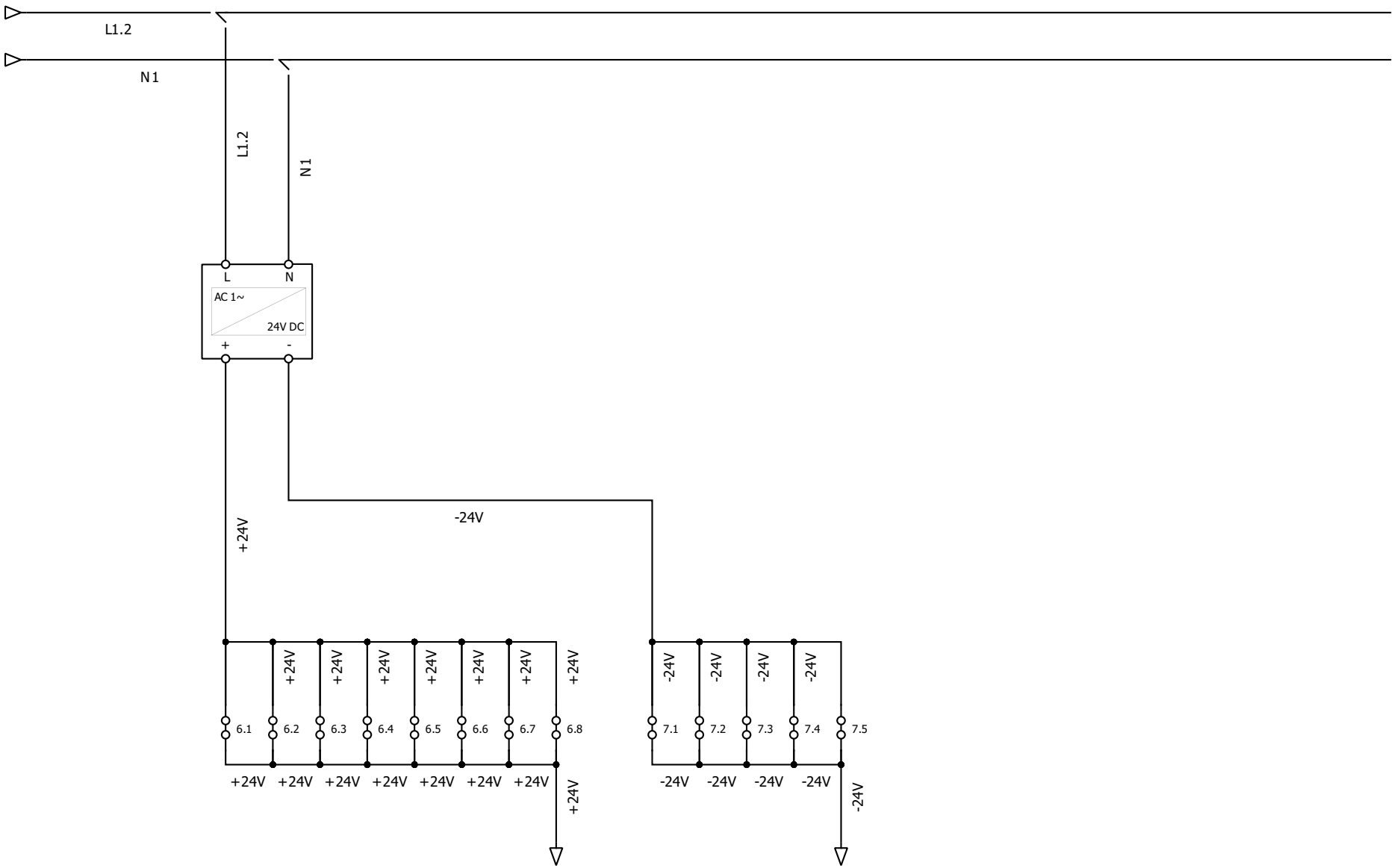

(cc) BY-NC-ND

2.11.2020 г.	Orlin Dimitrov				POLYGONTEAM LTD SOLUTIONS FOR EVERYONE	PROJET: Zontromat OBJET: %title MODEL: OfficeCabType1-L1	CLIENT: BCVT
2.11.2020 г.	NAME	APPD	REVISION	10	Title: Operation Voltage		
DESIGN:		CHKD		APPD			File: Office Cabinet 3P 3/15
File: Office Cabinet 3P							

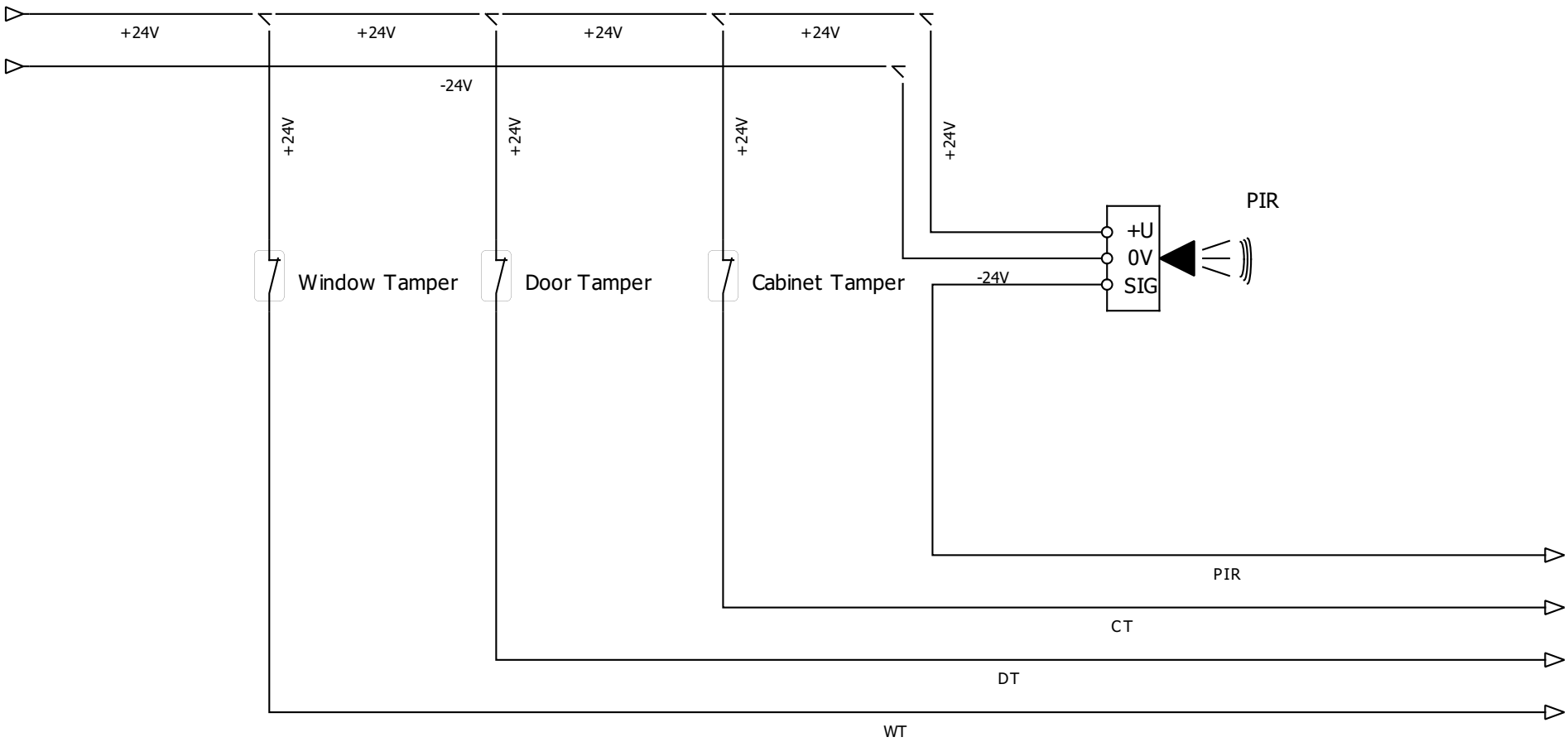

(cc) BY-NC-ND

2.11.2020 г.	Orlin Dimitrov				POLYGONTEAM LTD SOLUTIONS FOR EVERYONE	PROJET: Zontromat	CLIENT: BCVT
						OBJET: %title	
						MODEL: OfficeCabType1-L1	
2.11.2020 г.	NAME	APPD	REVISION	10	Title: Sensors 1		
DESIGN:		CHKD		APPD			File: 4/15
File:							

	1	2	3	4	5	6	7	8	9	10	11	12	13	14	15	16	17
A																	
B																	
C																	
D																	
E																	
F																	
G																	
H																	

(cc) BY-NC-ND

2.11.2020 г.	Orlin Dimitrov				POLYGONTEAM LTD SOLUTIONS FOR EVERYONE	PROJET: Zontromat	CLIENT: BCVT	
						OBJET: %title		
						MODEL: OfficeCabType1-L1		
2.11.2020 г.	NAME	APPD	REVISION	10	Title: Sensors 2			
DESIGN:		CHKD		APPD			File:	5/15
File:								

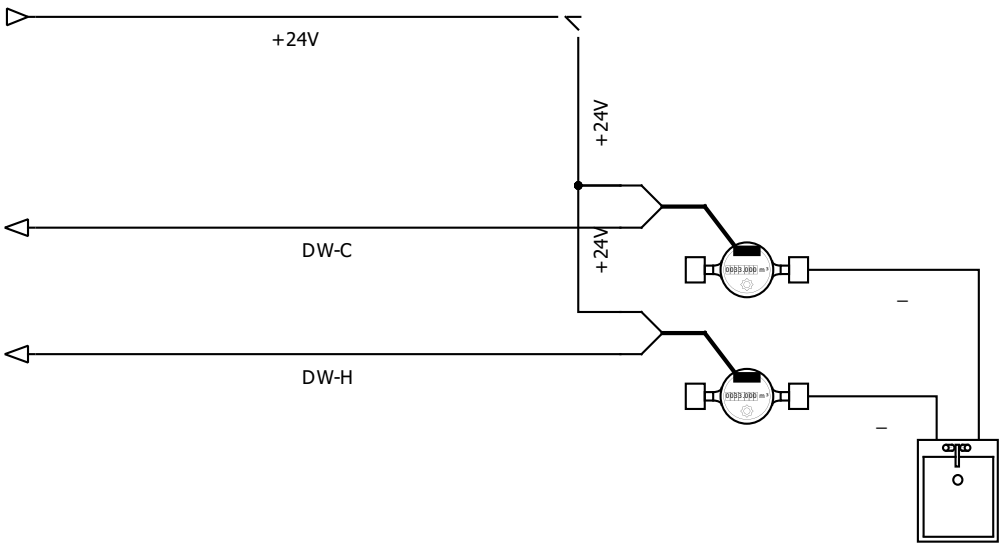

BY-NC-ND

2.11.2020 г.	Orlin Dimitrov				POLYGONTEAM LTD SOLUTIONS FOR EVERYONE	PROJET: Zontromat OBJET: %title MODEL: OfficeCabType1-L1	CLIENT: BCVT
2.11.2020 г.	NAME	APPD	REVISION	10	Title: Drink Water		
DESIGN:		CHKD	APPD				File: 6/15
File:							

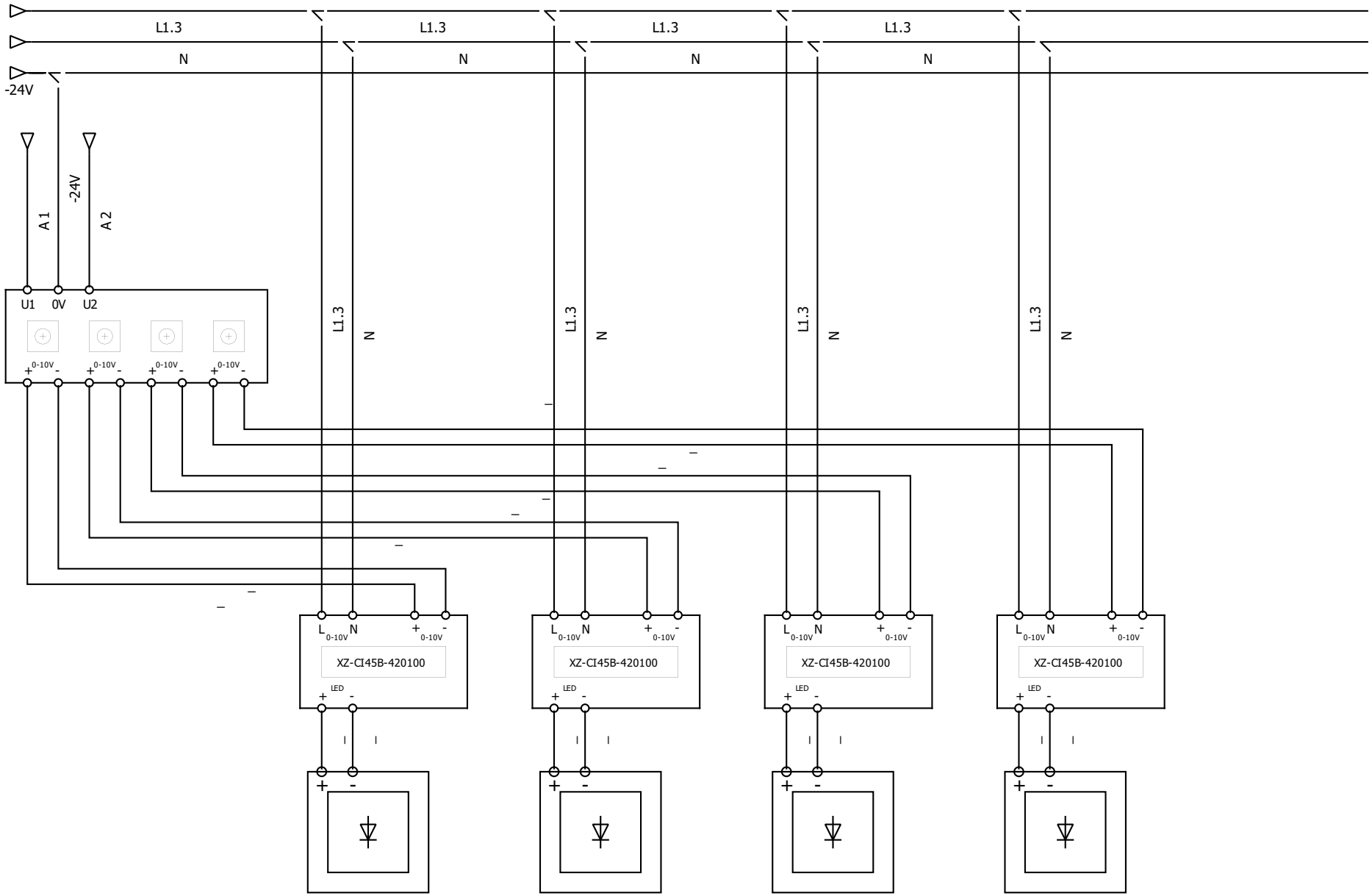

2.11.2020 г.	Orlin Dimitrov					POLYGONTEAM LTD SOLUTIONS FOR EVERYONE		PROJET: Zontromat		CLIENT: BCVT							
								OBJET: %title									
								MODEL: OfficeCabType1-L1									
2.11.2020 г.	NAME	APPD	REVISION		10	Title: Lamps											
DESIGN:		CHKD		APPD										File:		7/15	
File:																	

BY-NC-ND

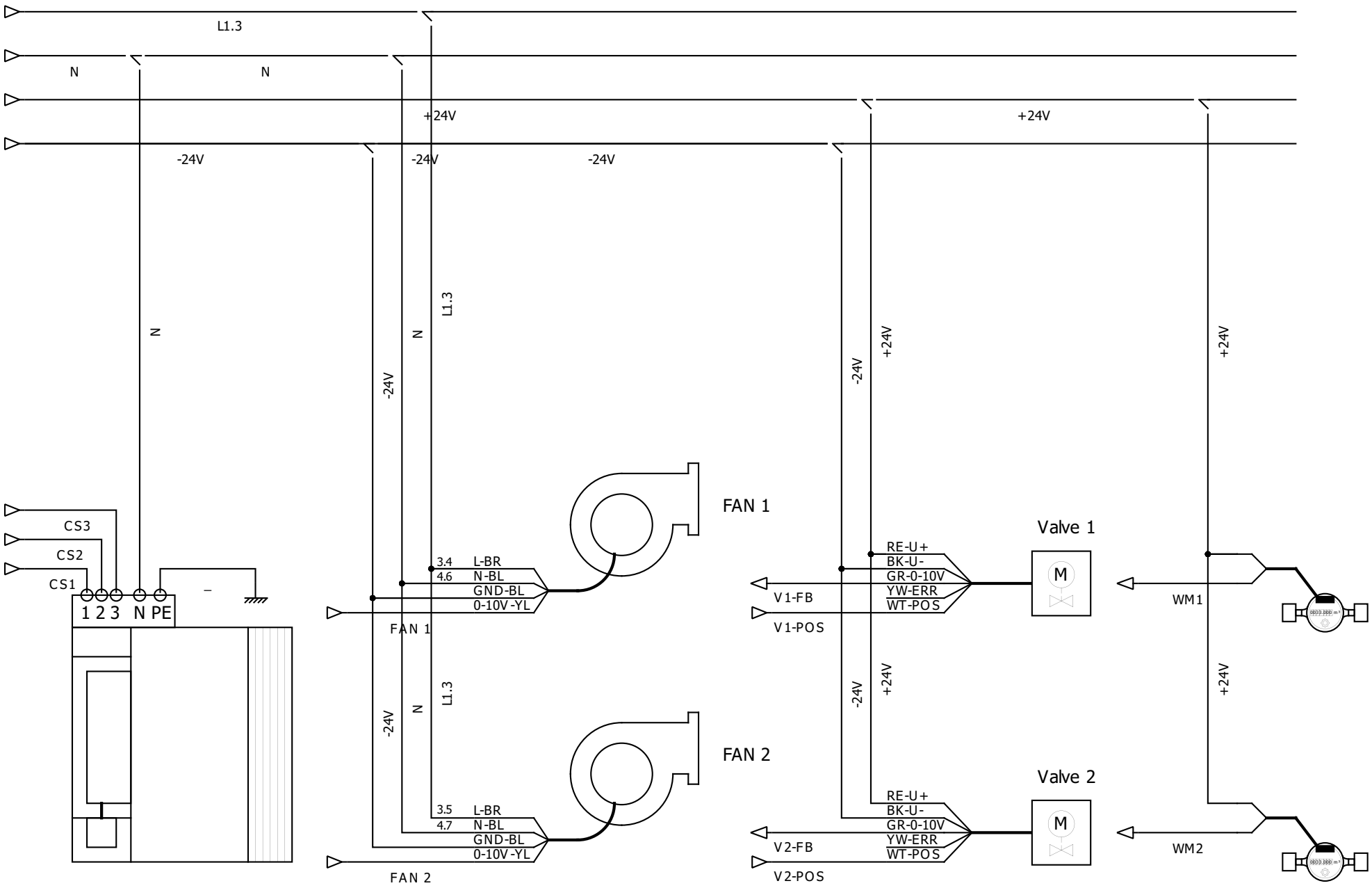

(cc) BY-NC-ND

2.11.2020 г.	Orlin Dimitrov				POLYGONTEAM LTD SOLUTIONS FOR EVERYONE	PROJET: Zontromat OBJET: %title MODEL: OfficeCabType1-L1	CLIENT: BCVT
2.11.2020 г.	NAME	APPD	REVISION	10	Title: HVAC		
DESIGN:		CHKD		APPD			File: 8/15
File:							

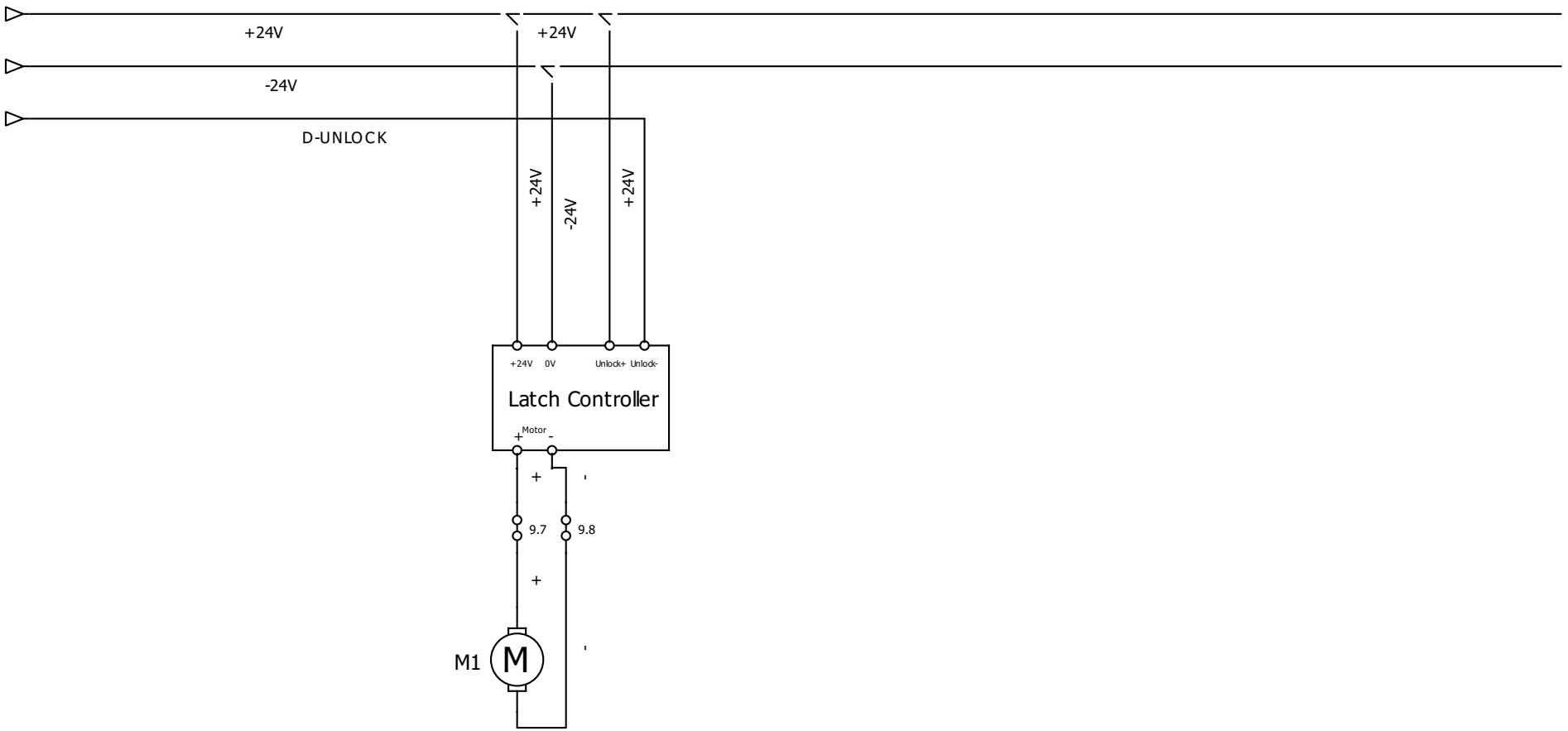

(cc) BY-NC-ND

2.11.2020 г.	Orlin Dimitrov				PROJET: Zontromat
					OBJET: %title
					MODEL: OfficeCabType1-L1
2.11.2020 г.	NAME	APPD	REVISION	10	Title: Door Lock
DESIGN:		CHKD		APPD	
File:					

POLYGONTEAM LTD
SOLUTIONS FOR EVERYONE

CLIENT: BCVT

File:

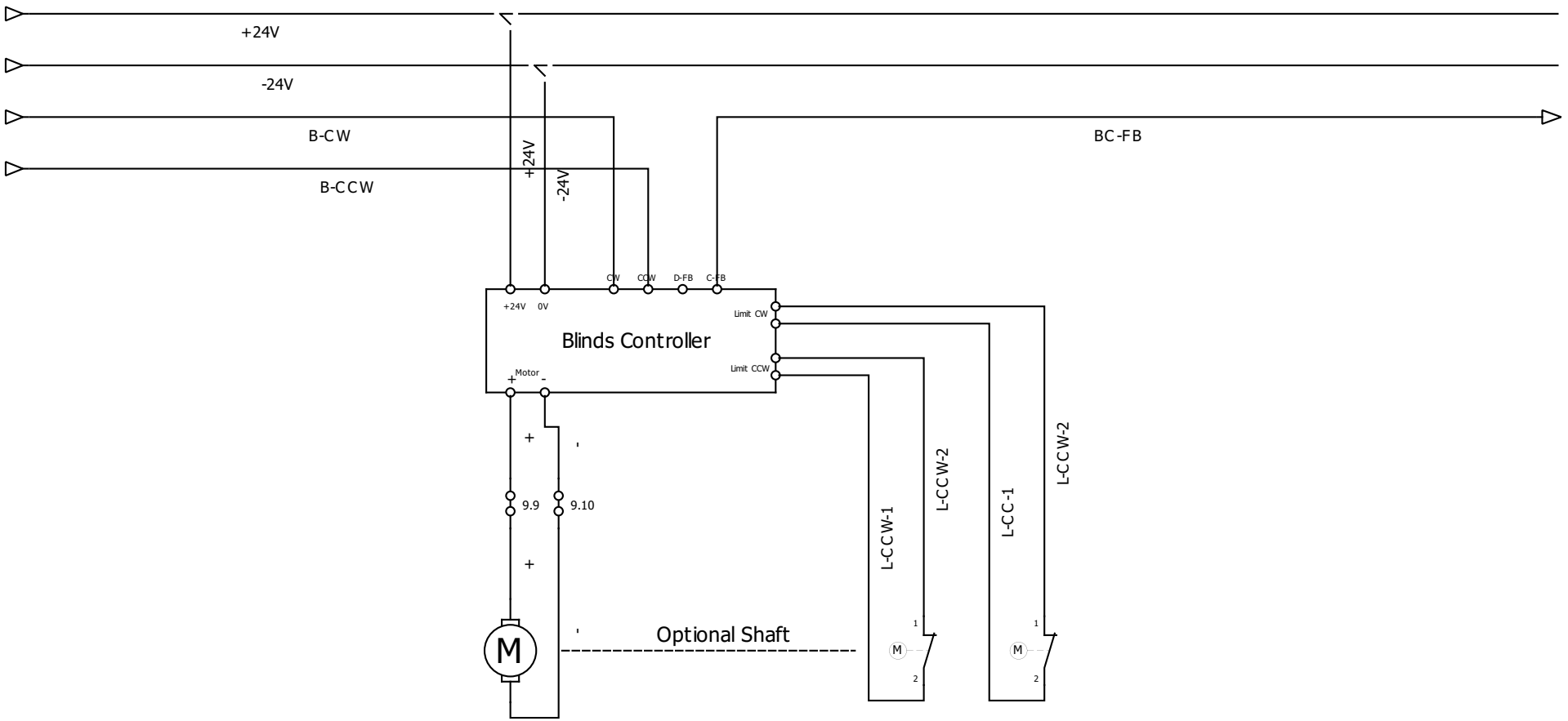

(cc) BY-NC-ND

2.11.2020 г.	Orlin Dimitrov				POLYGONTEAM LTD SOLUTIONS FOR EVERYONE	PROJET: Zontromat OBJET: %title MODEL: OfficeCabType1-L1	CLIENT: BCVT
2.11.2020 г.	NAME	APPD	REVISION	10	Title: Blinds		
DESIGN:		CHKD		APPD			File: 10/15
File:							

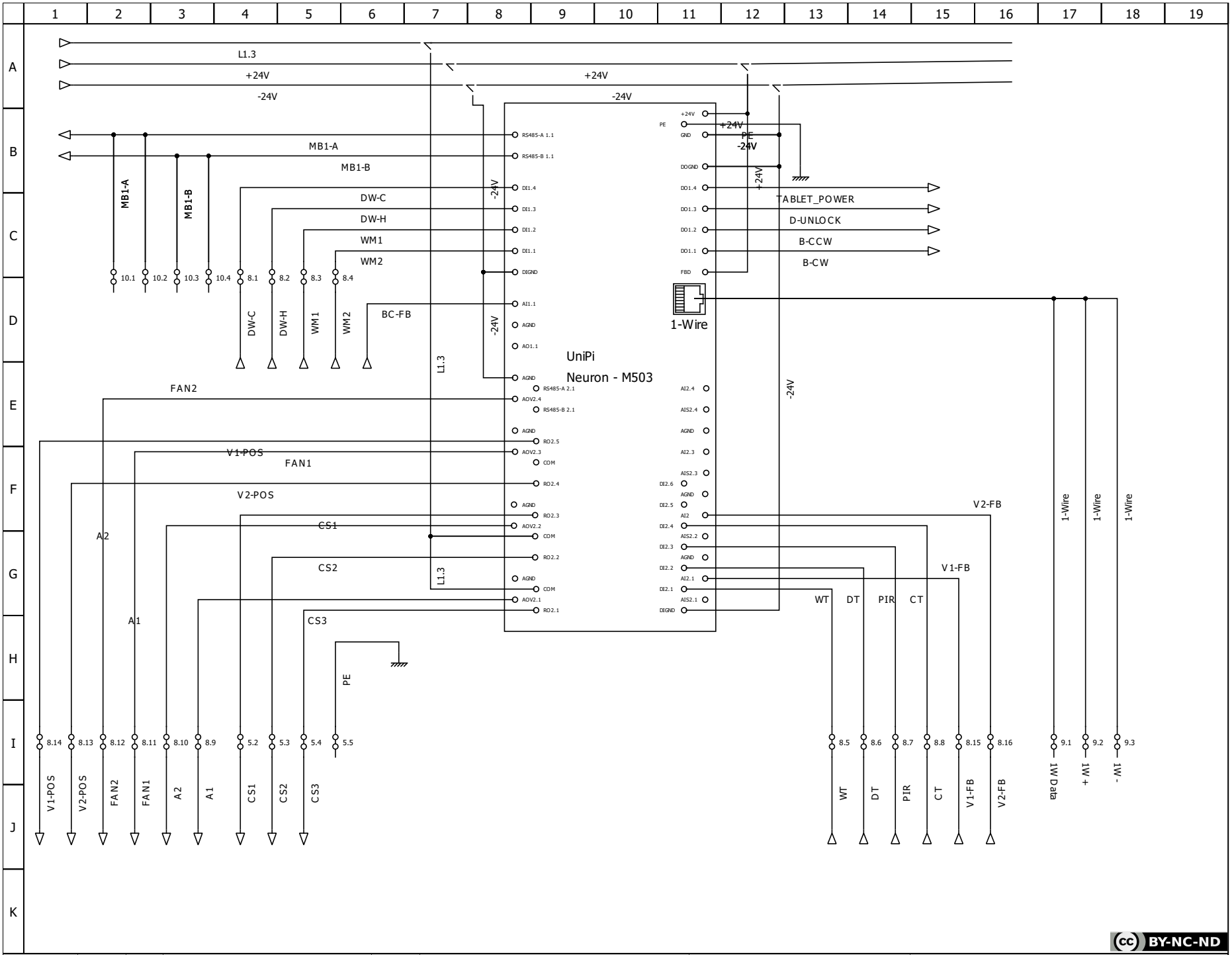

(cc) BY-NC-ND

2.11.2020 г.	Orlin Dimitrov				POLYGONTEAM LTD SOLUTIONS FOR EVERYONE	PROJET: Zontromat	CLIENT: BCVT		
						OBJET: %title			
2.11.2020 г.	NAME	APPD	REVISION	10		MODEL: OfficeCabType1-L1			
DESIGN:		CHKD		APPD	Title: Controller				
File:							File:	11/15	

№	Terminal	Signal Type	Siganl Name	Function	Location
1	1.1	PE	PE	Costumer 1	Cabinet
2	1.2	PE	PE	Costumer 2	Cabinet
3	2.1	L1	L1	MAIN L1	Cabinet
4	2.2	L3	L2	MAIN L2	Cabinet
5	2.3	L3	L3	MAIN L3	Cabinet
6	2.4	N	N	MAIN N	Cabinet
7	2.5	PE	PE	MAIN PE	Cabinet
8	3.1	L2	L2.1	Costumer 1	Cabinet
9	3.2	L3	L3.1	Costumer 2	Cabinet
10	3.3	L1	L1.1	Lignt	Cabinet
11	3.4	L1	L1.2	Fan 1	Cabinet
12	3.5	L1	L1.2	Fan 2	Cabinet
13	3.6	L1	L1.2	Convector	Cabinet
14	3.7	L1	L1.3	24-PU	Cabinet
15	3.8	L1	L1.3	FREE	Cabinet
16	4.1	N	N1	Costumer 1	Cabinet
17	4.2	N	N1	Costumer 2	Cabinet
18	4.3	N	N1	24-PU	Cabinet
19	4.4	N	N1	Light	Cabinet
20	4.5	N	N1	Fan 1	Cabinet
21	4.6	N	N1	Fan 1	Cabinet
22	5.1	N	N1	Convector	Cabinet
23	5.2	L1	CS1	Convector S1	Cabinet
24	5.3	L1	CS2	Convector S2	Cabinet
25	5.4	L1	CS3	Convector S3	Cabinet

(cc) BY-NC-ND

№ Terminal	Signal Type	Siganl Name	Function	Location
26 5.5	PE	PE	Convector	Cabinet
27 6.1	+24V	+24V	Water Meter Cool	Cabinet
28 6.2	+24V	+24V	Water Meter Hot	Cabinet
29 6.3	+24V	+24V	Water Meter Loop 1	Cabinet
30 6.4	+24V	+24V	Water Meter Loop 2	Cabinet
31 6.5	+24V	+24V	Window Tamper	Cabinet
32 6.6	+24V	+24V	Door Tamper	Cabinet
33 6.7	+24V	+24V	Cabinet Tamper	Cabinet
34 6.8	+24V	+24V	PIR Room	Cabinet
35 7.1	-24V	-24V	Light	Cabinet
36 7.2	-24V	-24V	Valve Loop 1	Cabinet
37 7.3	-24V	-24V	Valve Loop 2	Cabinet
38 7.4	-24V	-24V	Fan 1	Cabinet
39 7.5	-24V	-24V	Fan 2	Cabinet
40 7.10	-24V	-24V	FREE	Cabinet
41 8.1	DI-0-24V	DW-C	Water Meter Cool	Cabinet
42 8.2	DI-0-24V	DW-H	Water Meter Hot	Cabinet
43 8.3	DI-0-24V	WM1	Water Meter Loop 1	Cabinet
44 8.4	DI-0-24V	WM2	Water Meter Loop 2	Cabinet
45 8.5	DI-0-24V		Window Tamper	Cabinet
46 8.6	DI-0-24V		Door Tamper	Cabinet
47 8.7	DI-0-24V		PIR Room	Cabinet
48 8.8	DI-0-24V		Cabinet Tamper	Cabinet
49 8.9	AO-0-10V	A1	Light	Cabinet
50 8.10	AO-0-10V	A2	Light	Cabinet

(cc) BY-NC-ND

№	Terminal	Signal Type	Siganl Name	Function	Location
51	8.11	AO-0-10V	FAN 1	Fan 1	Cabinet
52	8.12	AO-0-10V	FAN 2	Fan 2	Cabinet
53	8.13	DO-0-24V	V1-POS	Valve Loop 1 POS	Cabinet
54	8.15	DO-0-24V	V2-POS	Valve Loop 2 POS	Cabinet
55	8.15	AI-0-10V	V1-FB	Valve Loop 1 FB	Cabinet
56	8.16	AI-0-10V	V2-FB	Valve Loop 2 FB	Cabinet
57	10.1	1 Wire	Data	1W Sensors	Cabinet
58	10.2	+5V	Power +	1W Sensors	Cabinet
59	10.3	0V	Power -	1W Sensors	Cabinet
60	11.1	Twisted Pear	MB1-A	Modbus RTU Neuron A	Cabinet
61	11.2	Twisted Pear	MB1-A	modbus RTU SDM630 A	Cabinet
62	11.3	Twisted Pear	MB1-B	Modbus RTU Neuron B	Cabinet
63	11.4	Twisted Pear	MB1-B	modbus RTU SDM630 B	Cabinet
64					
65					
66					
67					
68					
69					
70					
71					
72					
73					
74					
75					

(cc) BY-NC-ND

2.11.2020 г.	Orlin Dimitrov				POLYGONTEAM LTD SOLUTIONS FOR EVERYONE	PROJET: Zontromat	CLIENT: BCVT
						OBJET: %title	
						MODEL: OfficeCabType1-L1	
2.11.2020 г.	NAME	APPD	REVISION	10	Title: Terminals 3		
DESIGN:		CHKD	APPD			File:	14/15
File:							

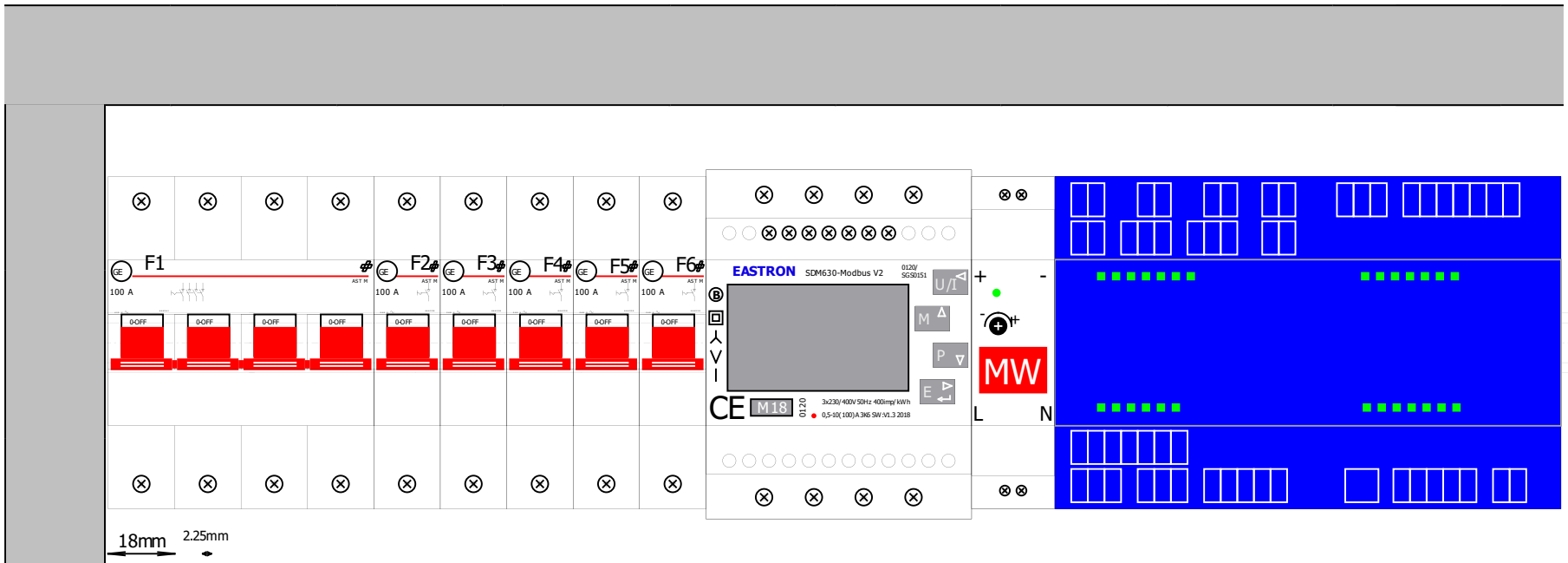

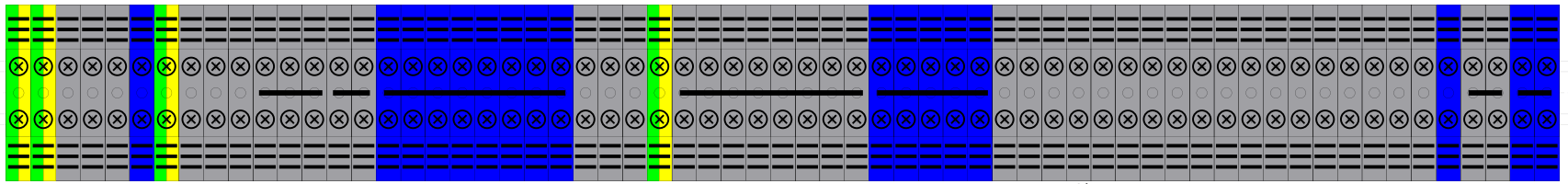

Cabinet PE
Costumer PE2
Costumer PE3
MAIN L1
MAIN L2
MAIN L3
MAIN N
MAIN PE
Costumer L2
Costumer L3
Light
Fan 1
Fan 2
Convector
24V PU
Consumer N2
Consumer N3
24V PU
Light
Fan 1
Fan 2
Convector N
Convector S1
Convector S2
Convector S3
Convector PE
Flowmeter Water C
Flowmeter Water H
Flowmeter Loop 1
Flowmeter Loop 2
Window Tamper
Door Tamper
Cabinet Tamper
PIR Room
Light
Valve 1
Valve 2
Fan 1
Fan 2
Flowmeter Water C
Flowmeter Water H
Flowmeter Loop 1
Flowmeter Loop 2
Window Tamper
Door Tamper
Cabinet Tamper
PIR Room
Light A0
Light A1
Fan 1
Fan 2
Valve 1 FB
Valve 2 FB
Valve 1
Valve 2
1W Bus
Modbus

BY-NC-ND

2.11.2020 г.	Orlin Dimitrov				POLYGONTEAM LTD SOLUTIONS FOR EVERYONE	PROJET: Zontromat	CLIENT: BCVT
						OBJET: %title	
2.11.2020 г.	NAME	APPD	REVISION	10		MODEL: OfficeCabType1-L1	
DESIGN:		CHKD	APPD		Title: Mounting		
File:						File:	15/15