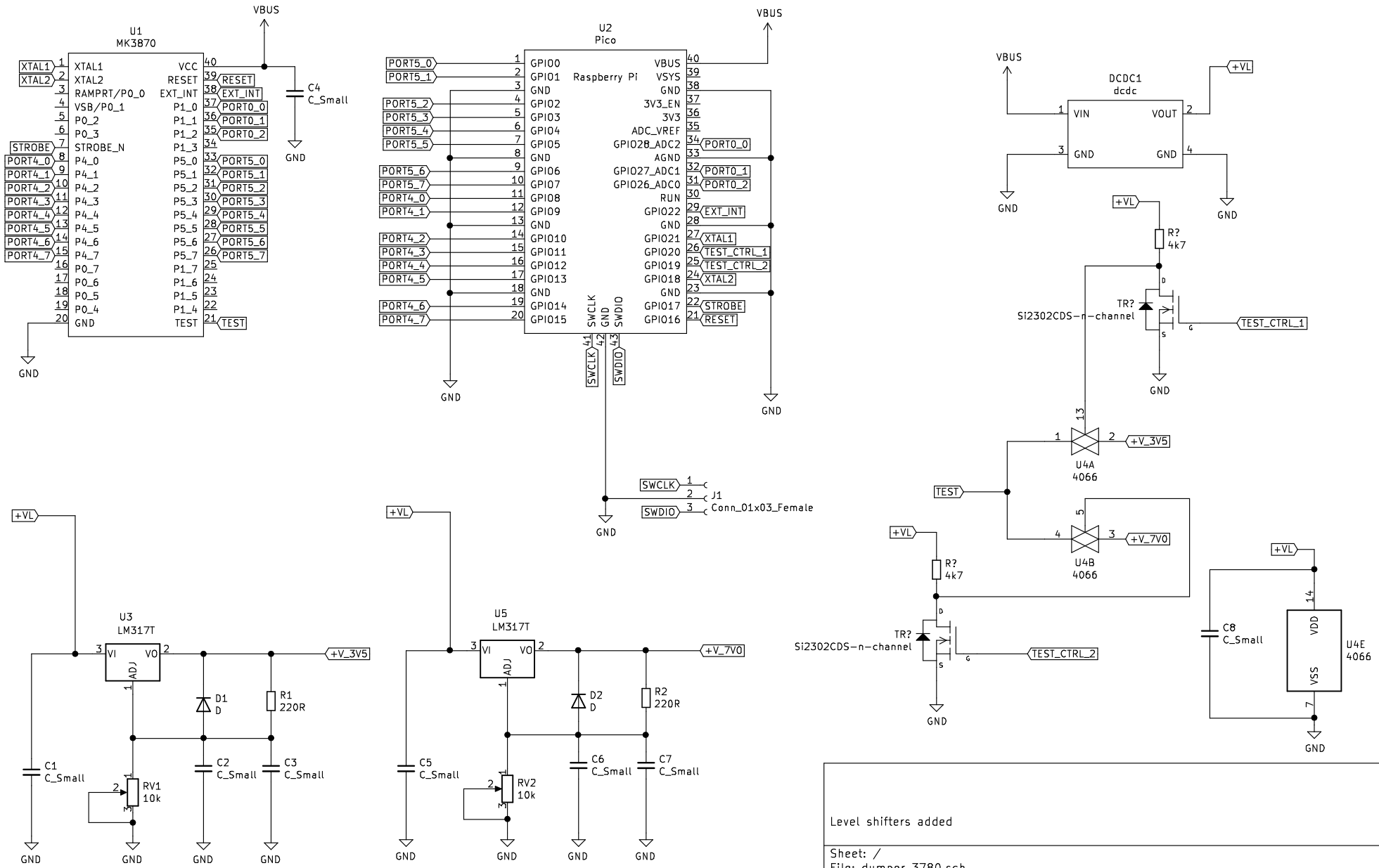

Level shifters added

Sheet: /
File: dumper_3780.sch

Title:

Size: A4	Date: 2024-02-18	**Rev: 2.0**
KiCad E.D.A. kicad 5.1.5+dfsg1-2build2		Id: 1/1