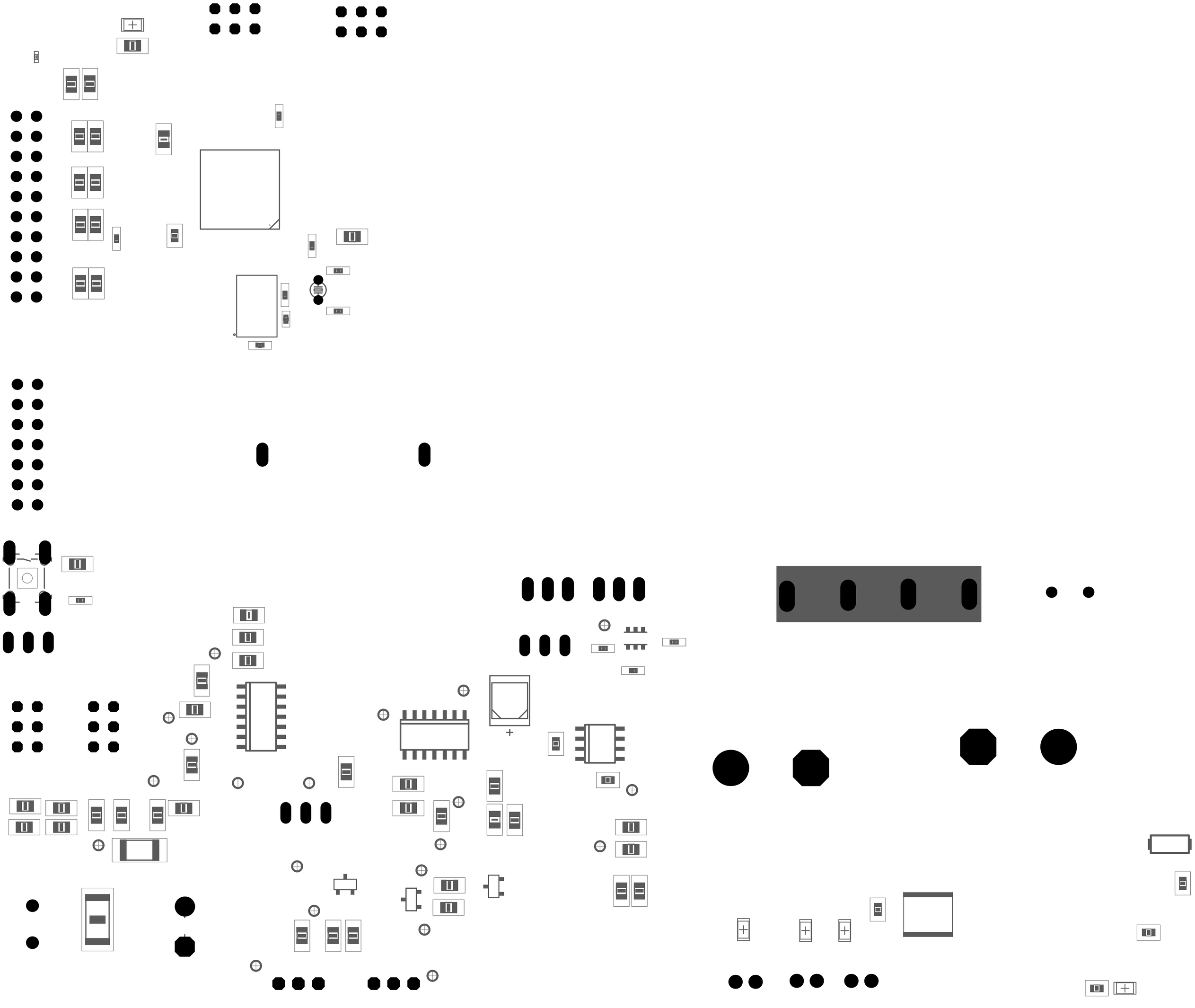

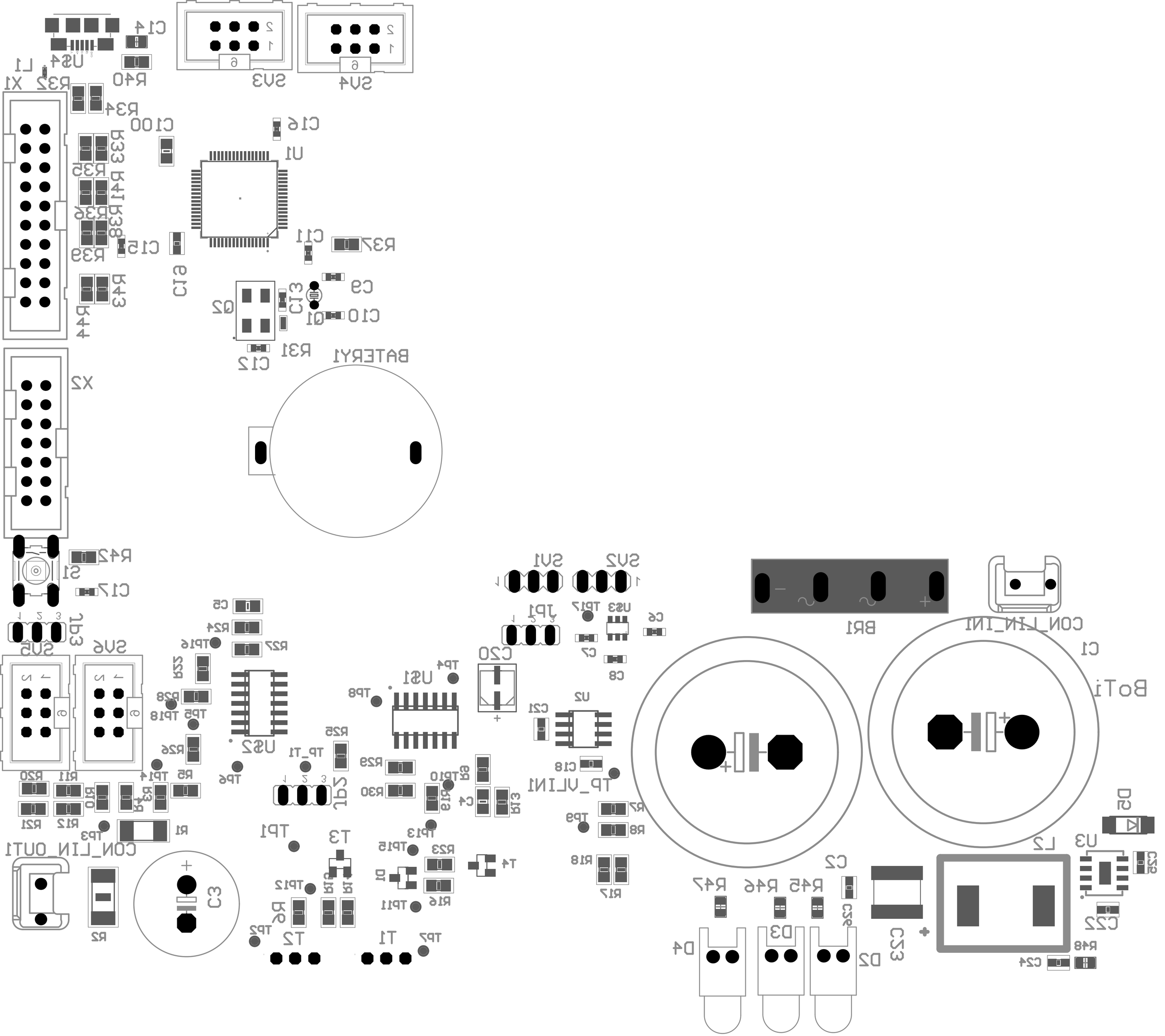
C14
U$4
L1
X1
R32
R40
SV3
SV4
R34
C100
C16
U1
R33
R35
R41
R38
R36
R39
C15
C12
C11
R37
R43
R44
Q2
C13
C9
Q1
C10
R31
C12
BATERYI
X2
R42
S1
C17
JP3
SV5
SV6
C5
R24
R27
TP16
R22
R28
TP5
TP18
R26
U$2
C20
TP4
U$1
TP8
SV1
SV2
JP1
U$3
TP12
C6
C7
C8
U2
C21
C18
TP_VLIN1
R25
TP_T1
R29
R30
TP10
R23
R13
C4
R7
R8
TP9
R18
R17
R20
R11
R10
R14
R3
R4
R5
TP14
TP6
JP2
R21
R12
TP3
R1
CON_LIN_OUT1
TP1
T3
TP13
TP15
R23
T4
D1
R16
TP11
TP12
R9
R2
C3
TP2
T2
T1
TP7
BR1
CON_LIN_IN1
C1
BoTi
D4
D3
D2
R45
R46
R47
C2
C22
C23
L2
U3
D5
C25
R48
C24

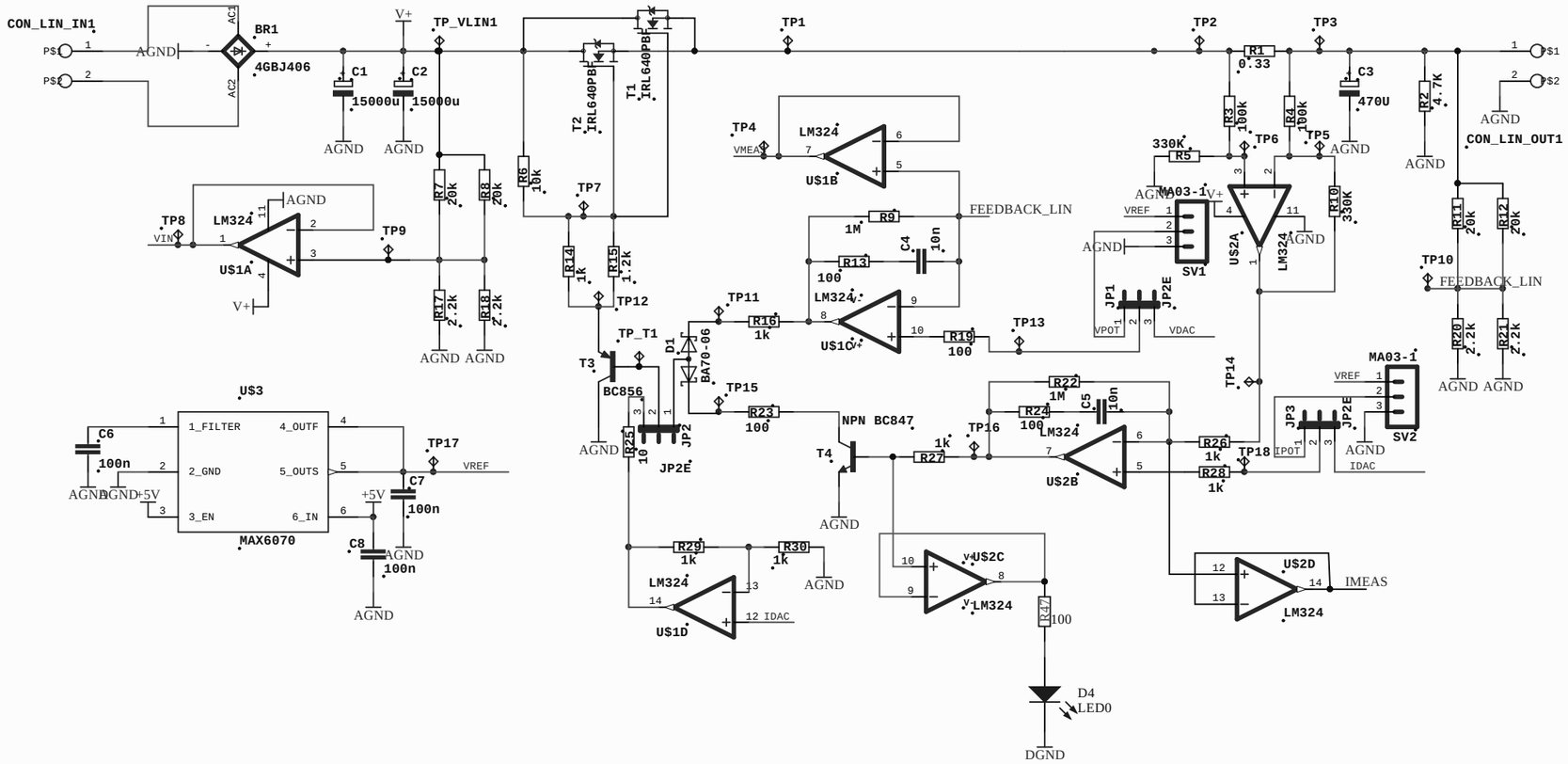

	powersupply_grid8.sch
	12/19/2018 10:57:11 PM
	Sheet: 1

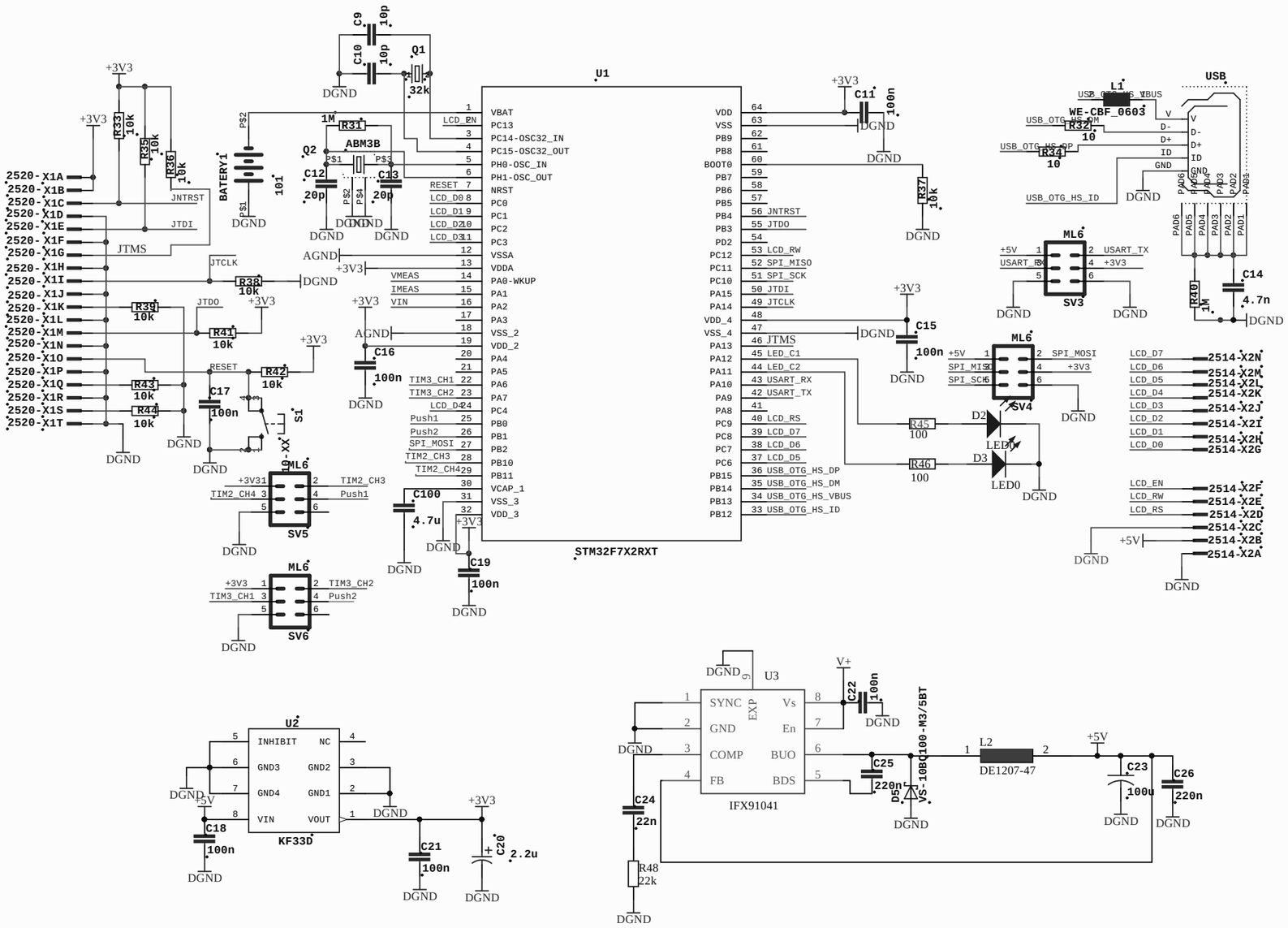

	powersupply_grid8.sch
	12/19/2018 10:57:12 PM
	Sheet: 2