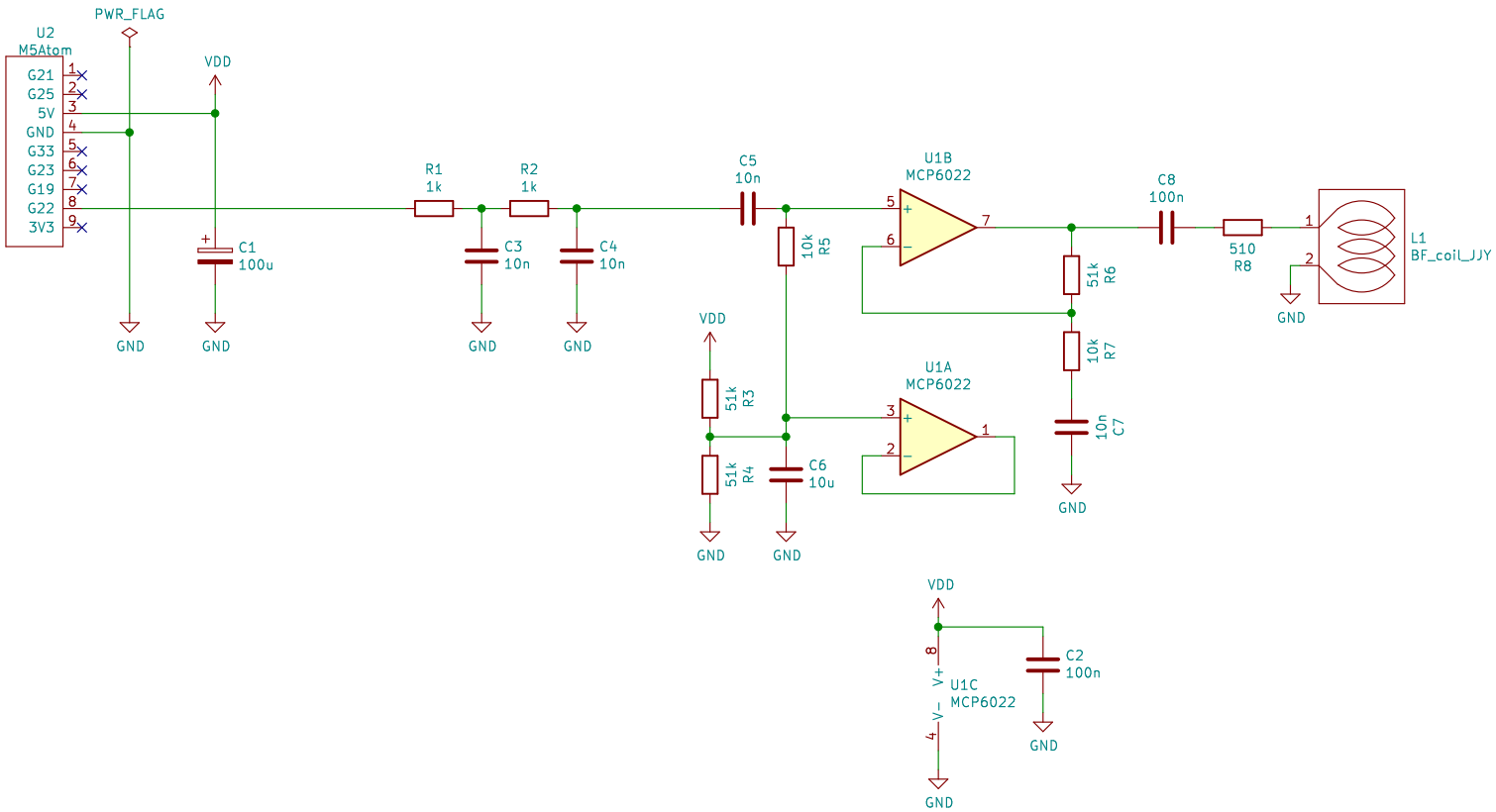

for low-pass filter: fc=1/(2pi x1kohm x10nF) =15.9kHz
for PSRR: fc=1/(2pi x(51kohm//51kohm) x10uF) =0.624Hz
for input: fc=1/(2pi x10kohm x10nF) =1.59kHz
for feedback: fc=1/(2pi x10kohm x10nF) =1.59kHz
for output: fc=1/(2pi x510ohm x100nF) =3.12kHz

JJY Antenna for M5Atom

Copyright 2020 BotanicFields, Inc.

Sheet: /
File: bf-018a.sch

Title: BF-018A

Size: A4	Date: 2020-11-06	**Rev: V01L02**
KiCad E.D.A. kicad (5.1.8)-1		Id: 1/1