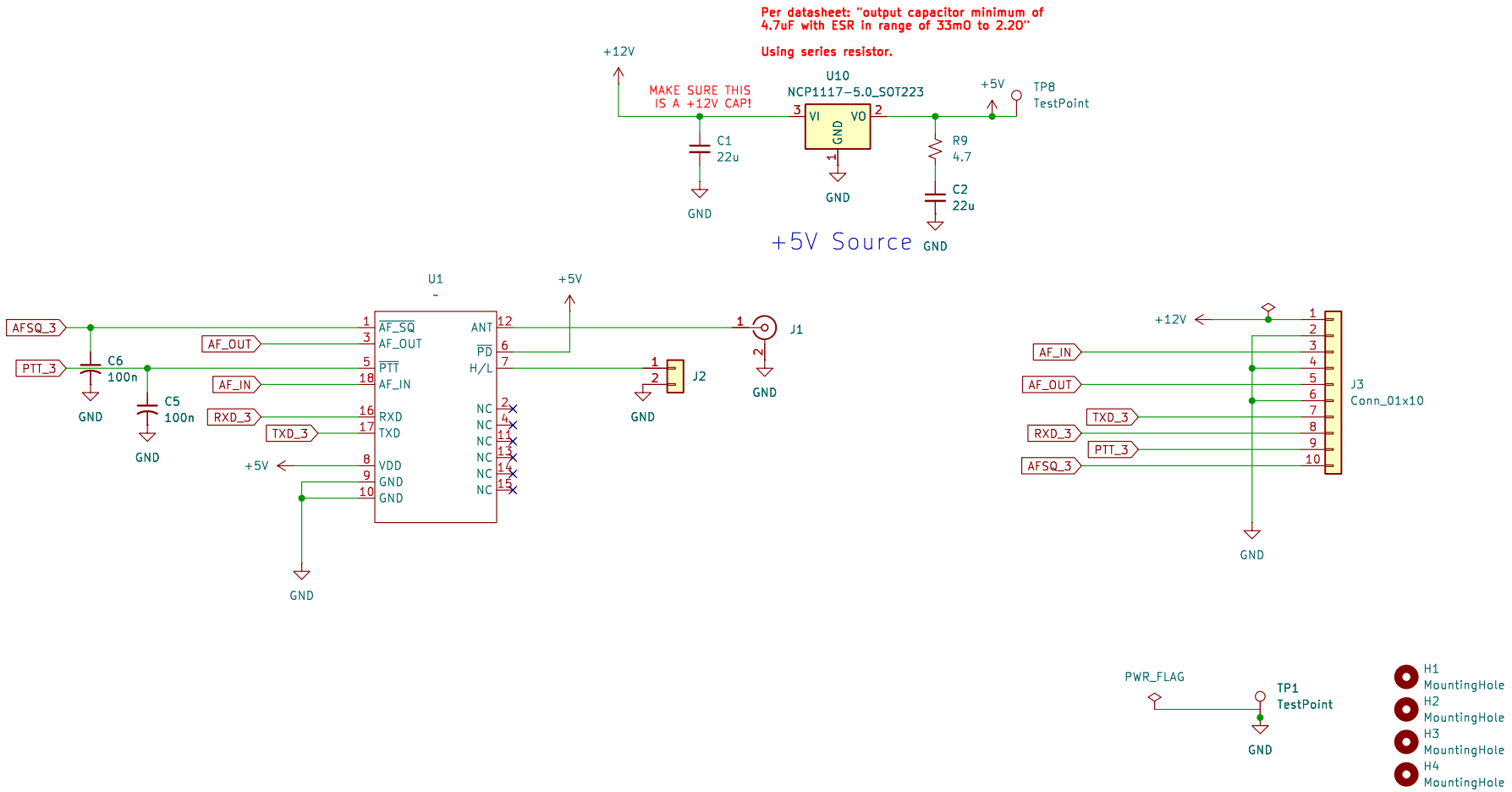

Copyright (C) 2025 - NOT FOR COMMERCIAL USE

Bruce MacKinnon KC1FSZ

Sheet: /

File: SA818-Breakout.kicad_sch

Title: SA818 Breakout

Size: USLetter	Date: 2025-10-06	**Rev: 1**
KiCad E.D.A. 9.0.4		Id: 1/1