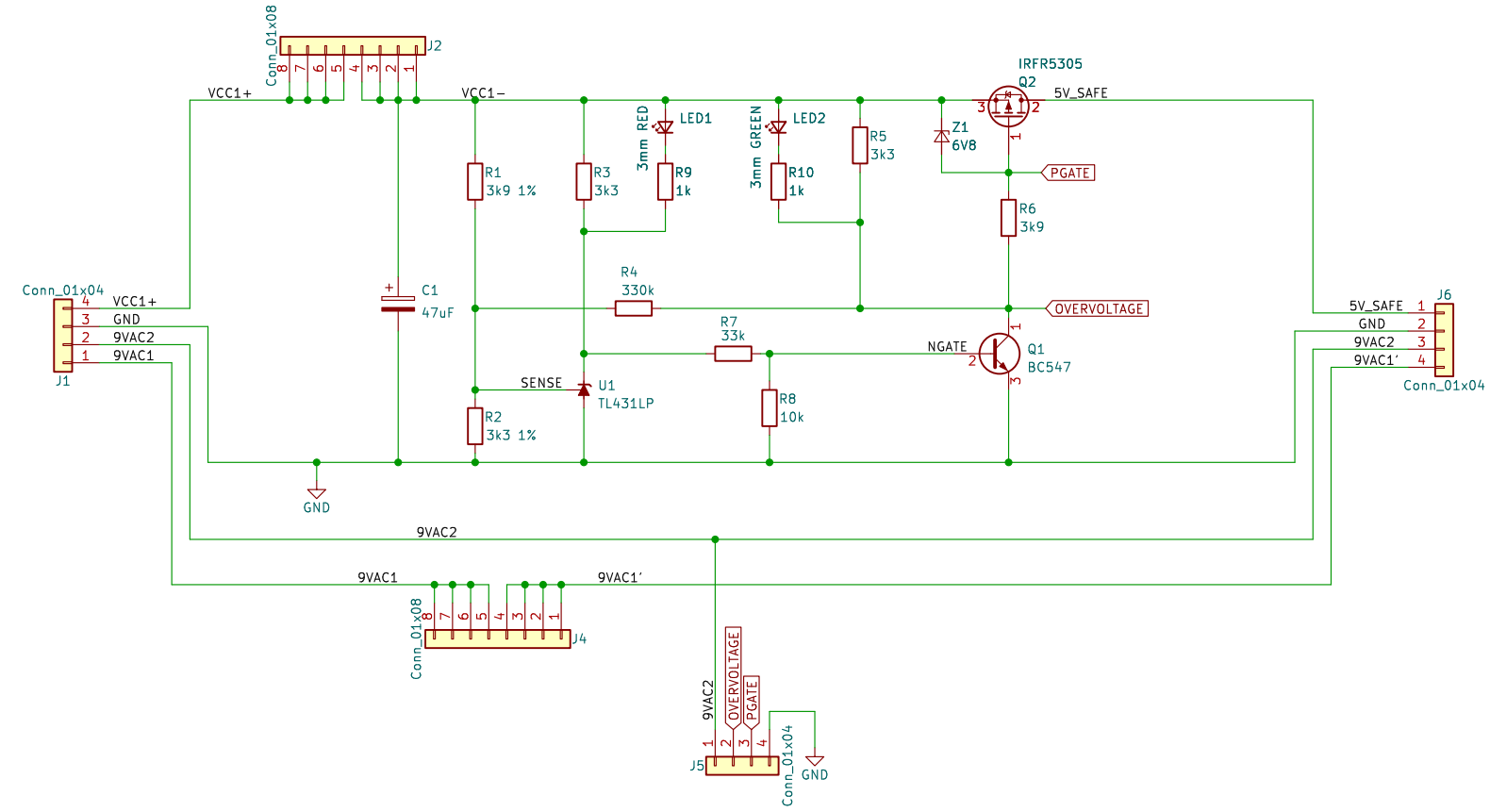

Sheet: /
File: C64Saver2.kicad_sch

Title: C64 Saver2 THT

Size: A4	Date: 2023-04-02	Rev: 2.6
KiCad E.D.A. kicad 7.0.1-3b83917a11~172~ubuntu20.04.1		Id: 1/1