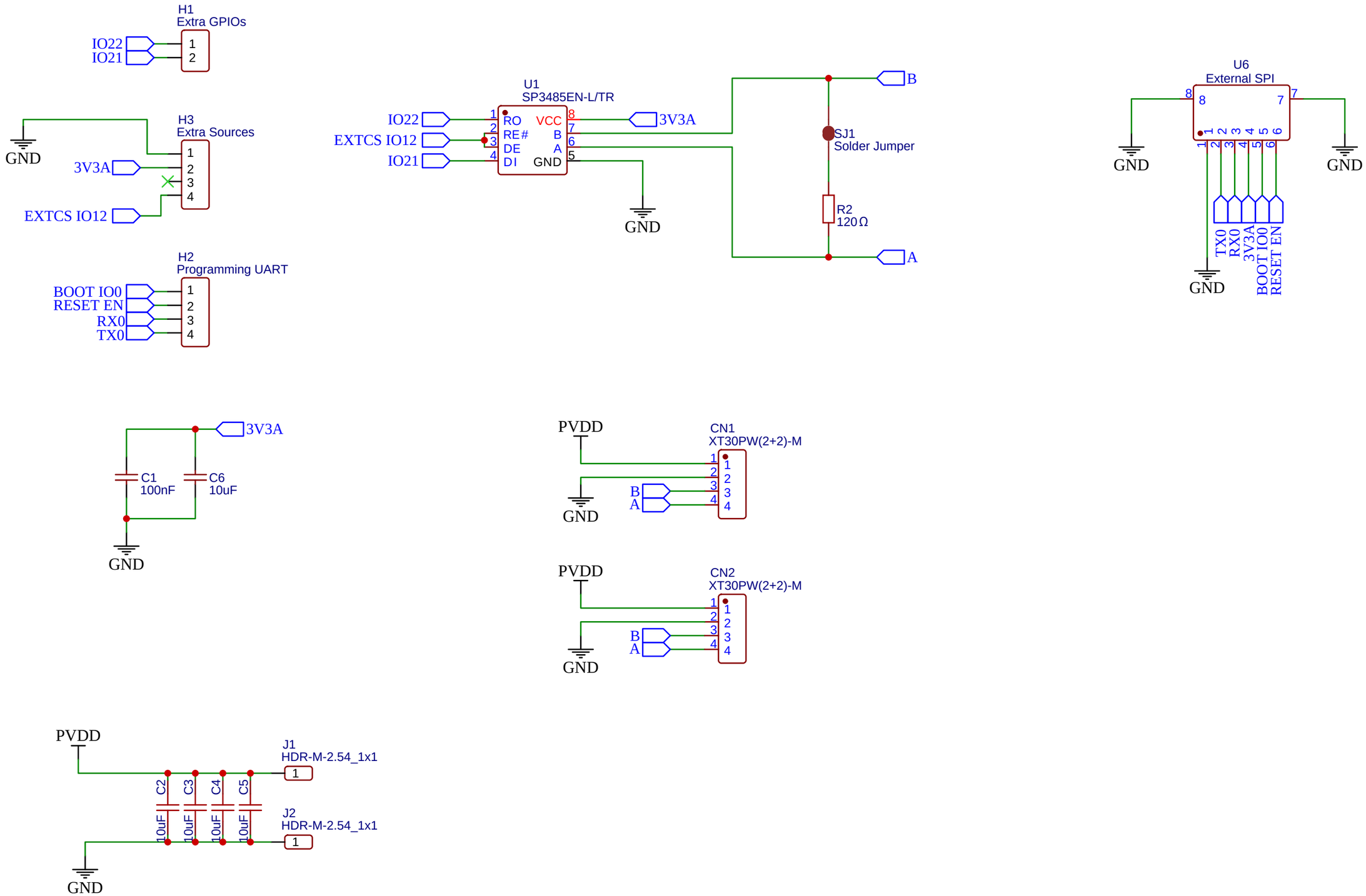

TITLE: RS-485 Daughter Board - Dagor Alpha	REV: 1.0
Company: Dagor Developments	Sheet: 1/1
Date: 2024-01-07 Drawn By: David Gonzalez	