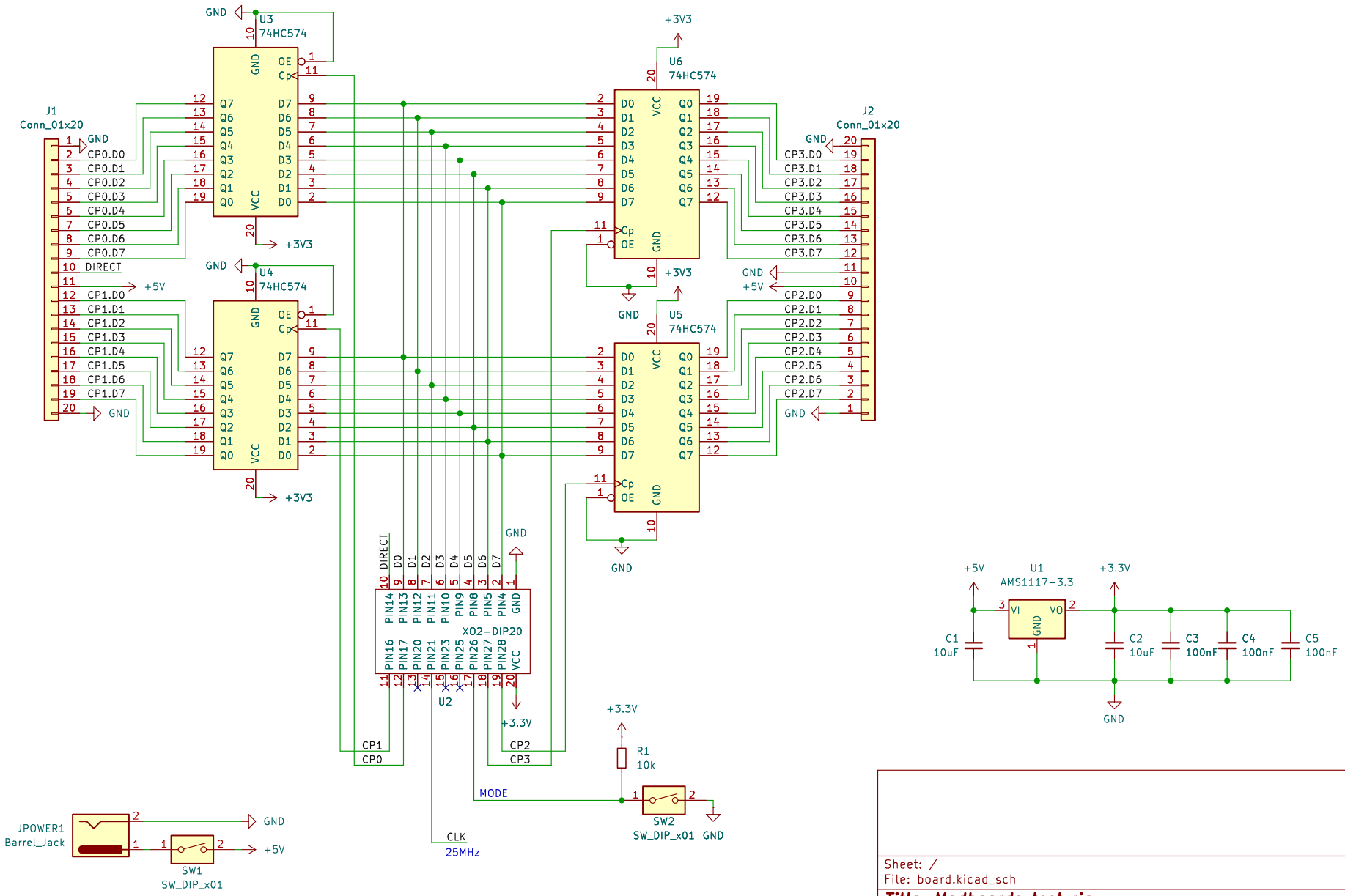

Sheet: /
File: board.kicad_sch

Title: Modboards test rig

Size: A4	Date:	Rev: 2
KiCad E.D.A. 8.0.1		Id: 1/1