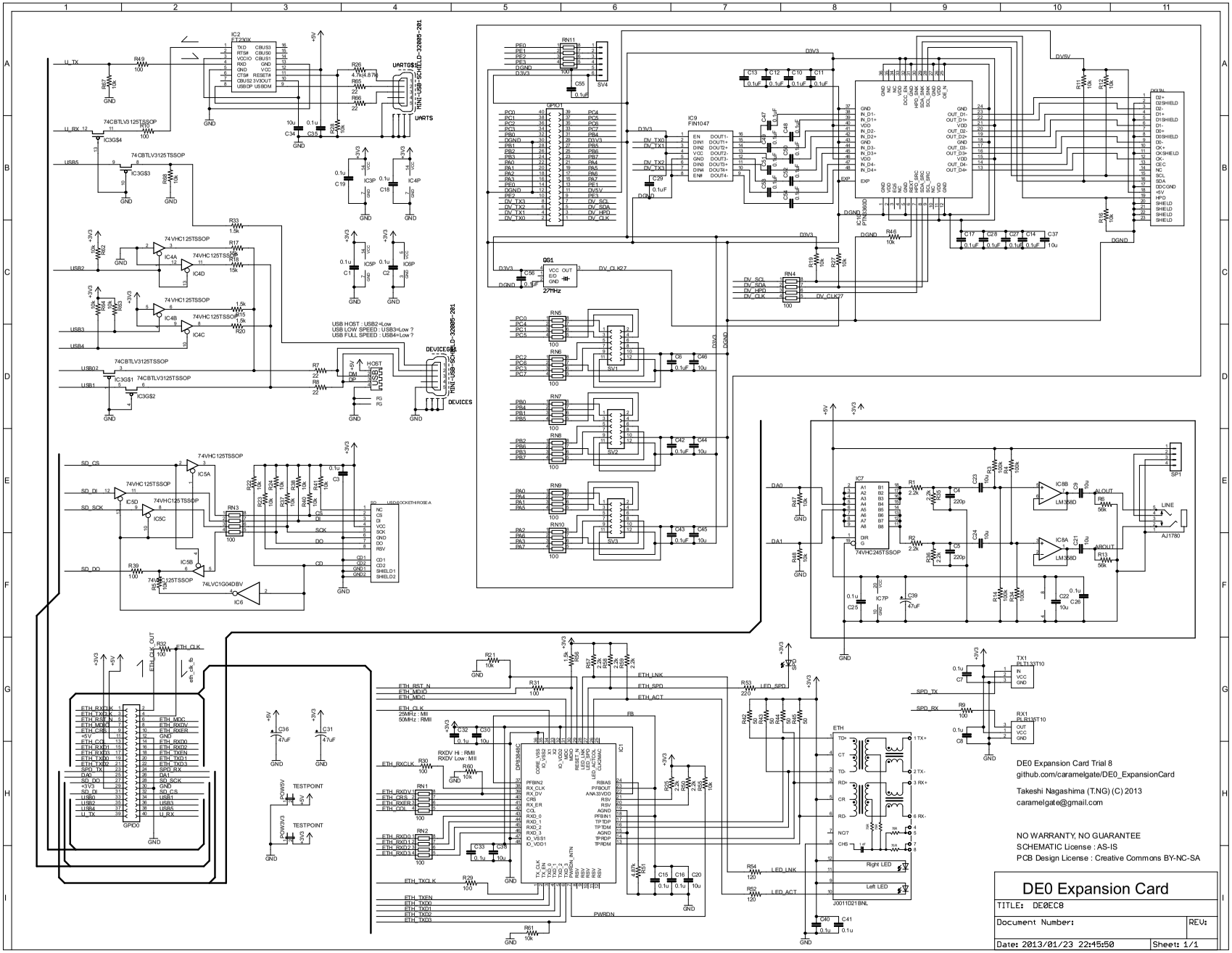
IC2 FT230X
TINI-USB-SHIELD-32085-201
UARTS
74CBTLV3125TSSOP
74VHC125TSSOP
USB HOST : USB2=Low
USB LOW SPEED : USB3=Low ?
USB FULL SPEED : USB4=Low ?
DEVICES
IC9 FIN1047
IC7 74VHC245TSSOP
IC8B LM358D
IC8A LM358D
SP1
AJ1780
LINE
ALOUT
AROUT
IC6 74LVC1G04DBV
USBDOCKETHROSIE-A
IC1 DP83848C
ETH
J0011D21BNL
Right LED
Left LED
TX1 PLT133/T10
RX1 PLR133/T10
TESTPOINT
DE0 Expansion Card Trial 8
github.com/caramelgate/DE0_ExpansionCard
Takeshi Nagashima (T.NG) (C) 2013
caramelgate@gmail.com
NO WARRANTY, NO GUARANTEE
SCHEMATIC License : AS-IS
PCB Design License : Creative Commons BY-NC-SA
DE0 Expansion Card
TITLE: DE0EC8
Document Number:
REV:
Date: 2013/01/23 22:45:50
Sheet: 1/1