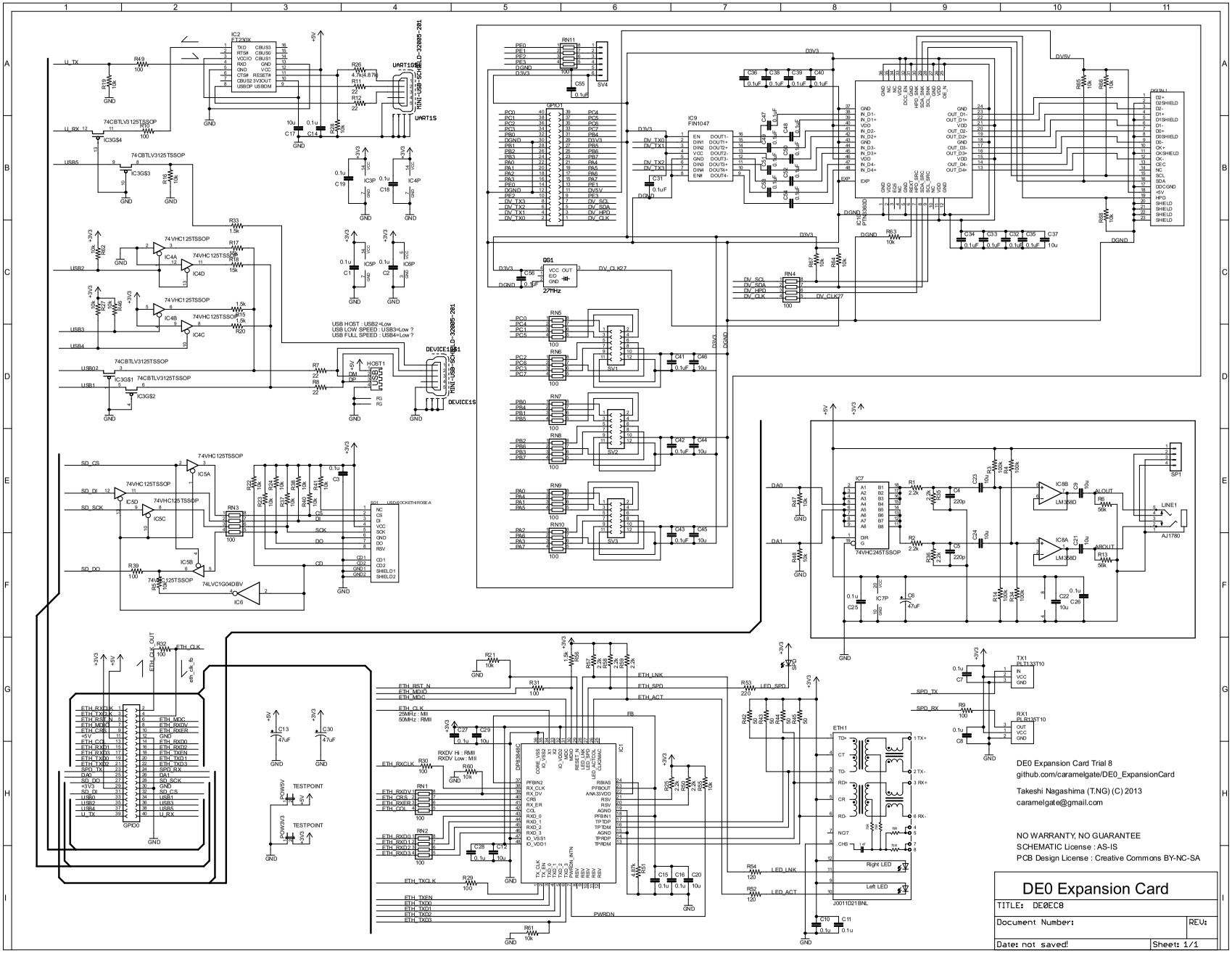
IC2 FT230X
UART1S
DEVICE1S
HOST1
USB HOST : USB2=Low
USB LOW SPEED : USB3=Low ?
USB FULL SPEED : USB4=Low ?
IC9 FIN1047
IC7 74VHC245TSSOP
IC8B LM358D
IC8A LM358D
SP1
LINE1
AJ1780
SD1 USDEOCKETHROSE-A
IC6 74LVC1G04DBV
ETH1
J0011D21BNL
Right LED
Left LED
TX1 PLT133/T10
RX1 PLR133/T10
DE0 Expansion Card Trial 8
github.com/caramelgate/DE0_ExpansionCard
Takeshi Nagashima (T.NG) (C) 2013
caramelgate@gmail.com
NO WARRANTY, NO GUARANTEE
SCHEMATIC License : AS-IS
PCB Design License : Creative Commons BY-NC-SA
DE0 Expansion Card
TITLE: DE0EC8
Document Number:
REV:
Date: not saved!
Sheet: 1/1