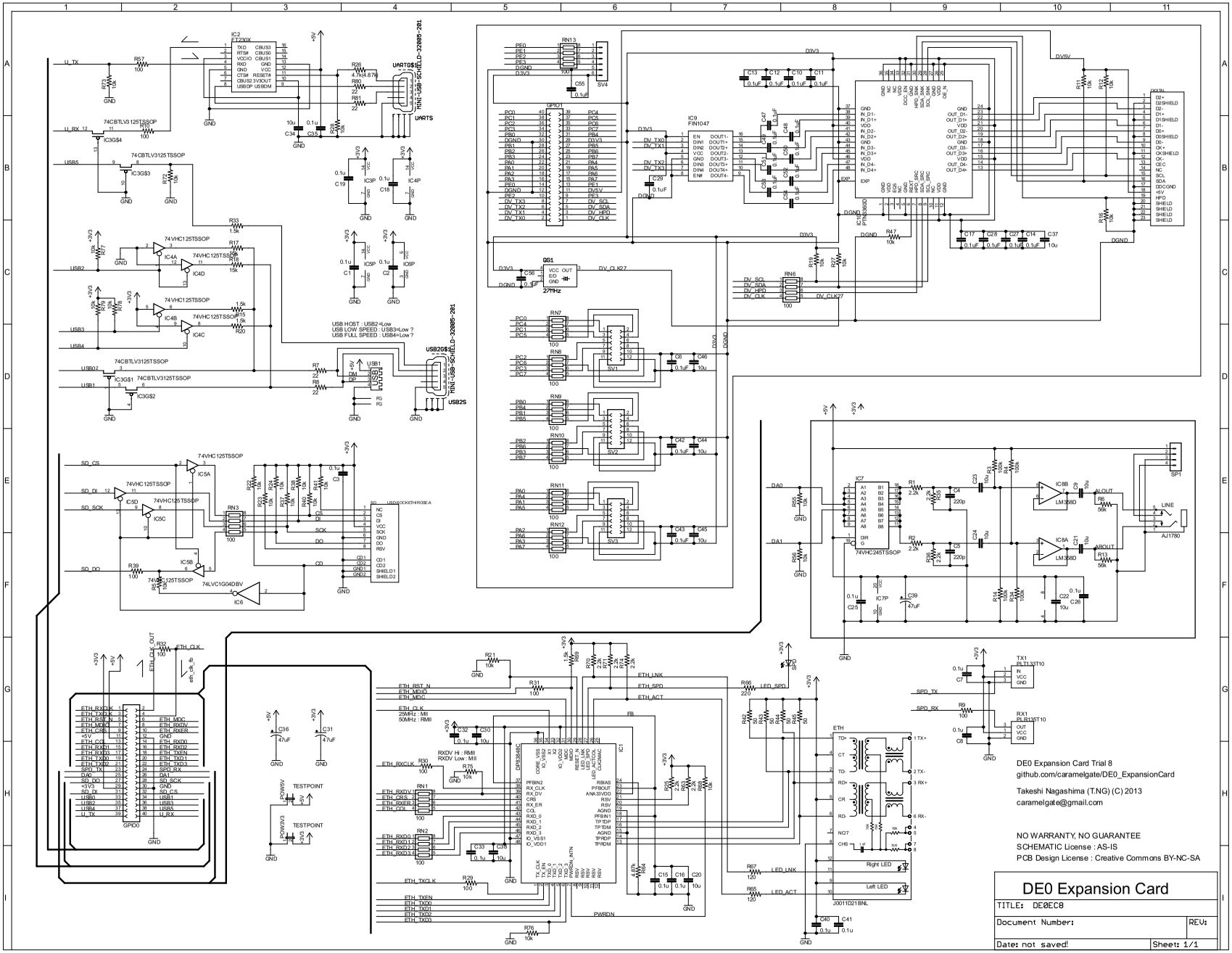
DE0 Expansion Card Trial 8
github.com/caramelgate/DE0_ExpansionCard
Takeshi Nagashima (T.NG) (C) 2013
caramelgate@gmail.com
NO WARRANTY, NO GUARANTEE
SCHEMATIC License : AS-IS
PCB Design License : Creative Commons BY-NC-SA
DE0 Expansion Card
TITLE: DE0EC8
Document Number:
REV:
Date: not saved!
Sheet: 1/1