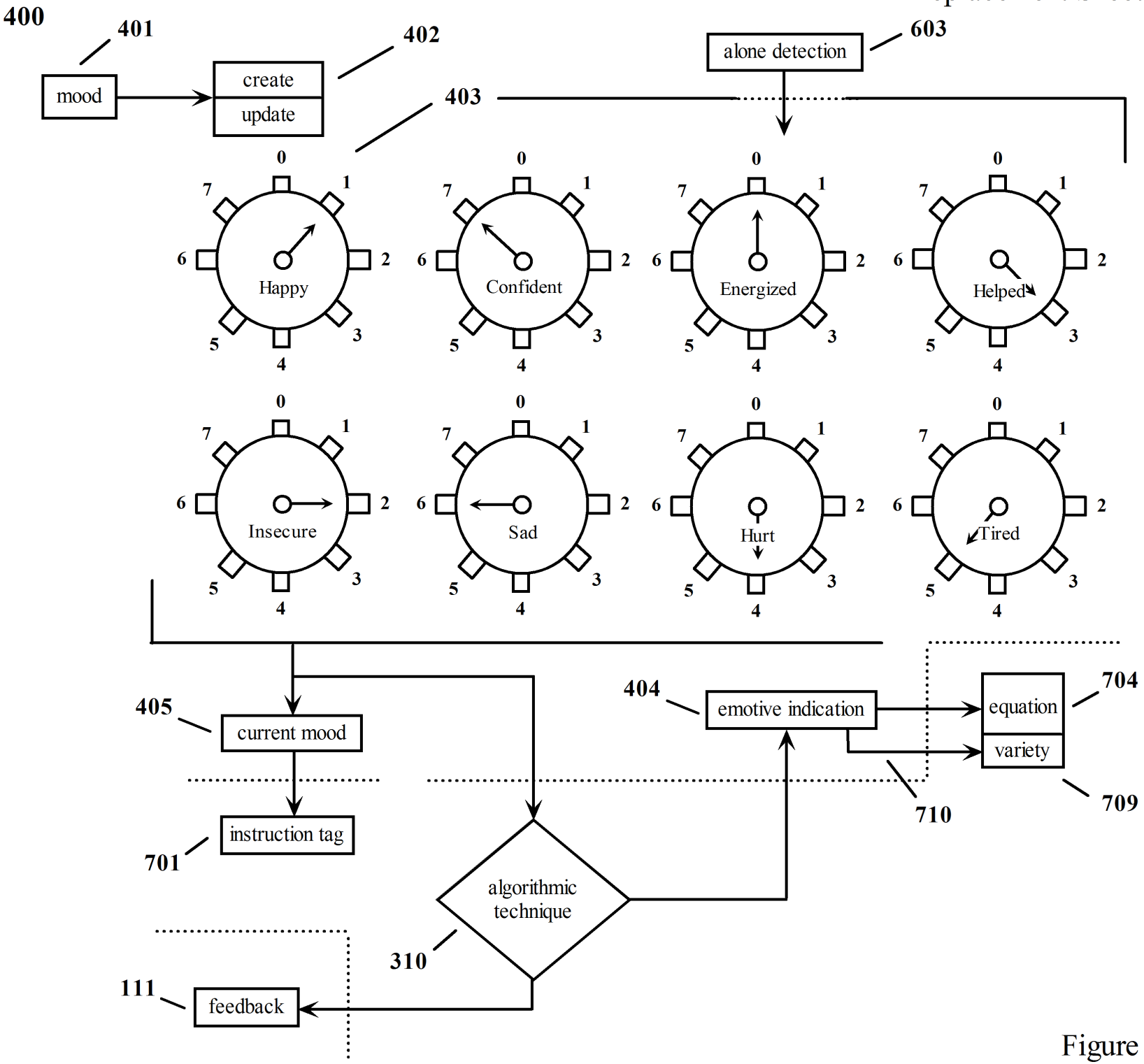
400
401
mood
402
create
update
403
alone detection
603
Happy
Confident
Energized
Helped
Insecure
Sad
Hurt
Tired
0
1
2
3
4
5
6
7
405
current mood
instruction tag
701
404
emotive indication
704
equation
variety
709
710
algorithmic technique
310
111
feedback

Figure 4