Metro

P3010
Los Angeles LRV

FRICTION BRAKES

Section 1300
RUNNING MAINTENANCE & SERVICING MANUAL

COPYRIGHT © 2021 – REVISION 2

LIST OF EFFECTIVE PAGES

Insert latest changed pages; dispose of superseded pages in accordance with applicable regulations.

NOTE: On a changed page, the portion of the text affected by the latest change is indicated by a vertical line.

Total number of pages in this section (1300) is **236** consisting of the following:

Original ..... 0 ..... October 2020
Revision ..... 1 ..... April 2021
Revision ..... 2 ..... October 2021

PAGE	CHANGE NO.	PAGE	CHANGE NO.
i	2		
ii through xiv	0		
1-1 through 1-4	0		
2-1 through 2-68	0		
3-1 through 3-4	0		
4-1 through 4-2	0		
5-1 through 5-26	0		
6-1 through 6-28	0		
7-1 through 7-2	0		
8-1 through 8-38	0		
9-1 through 9-44	0		
I-1 through I-2	0		
A-1 through A-2	0		
B-1 through B-2	0		

THIS PAGE INTENTIONALLY LEFT BLANK

SAFETY SUMMARY

Some of the procedures in this section are preceded by warnings/cautions regarding potential hazards in handling this equipment. These warnings/cautions should be carefully read and understood before proceeding. Failure to observe these precautions may result in serious injury to personnel performing the work and/or bystanders and/or damage to equipment and property. The key warnings for this equipment are as follows:

Electrical - The electrical equipment described in this section operates at voltages and currents that are extremely dangerous to life. Personnel should closely observe all generally prescribed cautions and warnings before performing any work on the LRV. Failure to heed these cautions and warnings by personnel could result in severe injury or death.

Chemicals – Follow safety precautions for handling hazardous chemicals as provided by the manufacturer. The manufacturer's warnings should be closely heeded to avoid personal injury.

Location – Special caution should be taken when accessing or servicing equipment located on the roof and under the car. Personnel should wear personal protective equipment (PPE), e.g., safety harness while accessing or servicing equipment located on the roof.

Weight – To prevent possible personal injury when attempting to remove or install equipment on the vehicle, adequate support of a lifting device must be used to prevent the equipment from falling. Failure to heed these cautions and warnings by personnel could result in severe injury or death and/or damage to equipment and property.

Contact – Some components in this equipment attain temperatures that can cause severe burns. Closely follow all warnings and recommended procedures for handling these components.

THIS PAGE INTENTIONALLY LEFT BLANK

TABLE OF CONTENTS

Chapter/Para **Page**

LIST OF EFFECTIVE PAGES ..... **i**

SAFETY SUMMARY ..... **iii**

TABLE OF CONTENTS ..... **v**

LIST OF ILLUSTRATIONS ..... **ix**

LIST OF TABLES ..... **xiii**

1.0 GENERAL DESCRIPTION **1-1**
1.1 Introduction **1-1**
1.2 System Summary **1-1**

2.0 FUNCTIONAL DESCRIPTION **2-1**
2.1 Introduction **2-1**
2.1.1 Brake Control Unit, Center Truck 2-1
2.1.2 Brake Control Unit, Motor Truck 2-5
2.1.3 Manual Park Brake Release 2-10
2.1.4 Air Supply Unit 2-12
2.1.5 Motor Compressor Unit 2-15
2.1.6 Air Dryer 2-17
2.1.7 Check Valve (CV) 2-21
2.1.8 Cutout Cock (MRCO, PBMRCO) 2-23
2.1.9 Air Filter (FTL, PBFLT) 2-23
2.1.10 Parking Brake Cutout Cock (PBCO) 2-24
2.1.11 Relay Valve (RV) 2-28
2.1.12 Load Limiting Valve (LLV) 2-31
2.1.13 Magnet Valves (EMV, FBCV, PBMV) 2-35
2.1.14 BCU Pressure Transducers (CVT, LWT, BCT, MRT) 2-37
2.1.15 BCU Test Points (TP) 2-38
2.1.16 Brake Apply and Brake Release Switch (BCA, BCR) 2-39
2.1.17 Park Brake Apply and Park Brake Released (PBA, PBR) 2-40
2.1.18 Electronic Control Unit (ECU) 2-41
2.1.19 Brake Calipers Service Brake and Parking Brake 2-52
2.1.20 Brake Disc 2-53
2.1.21 Brake Pad 2-54
2.1.22 Reservoirs 2-54
2.1.23 Dump Valve (DV) 2-56
2.1.24 Sanding Equipment 2-63
2.1.25 Speed Sensors 2-64

3.0 SCHEDULED MAINTENANCE TASKS **3-1**
3.1 Introduction **3-1**
3.2 Scheduled Maintenance Index **3-1**

4.0 SPECIAL TOOLS AND MATERIALS **4-1**

TABLE OF CONTENTS

Chapter/Para		Page
5.0	**SCHEDULED / PREVENTIVE MAINTENANCE PROCEDURES**	**5-1**
5.1	**Preventive Maintenance Procedures**	**5-1**
5.1.1	Inspect ASU Compressor Oil Level	5-1
5.1.2	Inspect Air Filter Condition, ASU	5-2
5.1.3	Inspect Main Reservoir	5-3
5.1.4	Inspect Brake Reservoir	5-5
5.1.5	Inspect ECU	5-6
5.1.6	Inspect Hoses and ASU	5-7
5.1.7	Inspect Brake Disc	5-8
5.1.8	Inspect Brake Caliper	5-19
5.1.9	Inspect Brake Pad	5-21
5.1.10	Inspect Apply and Release BCU Magnet Valves	5-22
5.1.11	Inspect Parking Brake Cutout Valve	5-24
5.1.12	Compressor Warm-Up	5-25
6.0	**CORRECTIVE MAINTENANCE PROCEDURES**	**6-1**
6.1	**Introduction**	**6-1**
6.2	**Safety Information**	**6-1**
6.3	**Maintenance Procedures**	**6-2**
6.3.1	Replace Intake Air Filters, ASU	6-2
6.3.2	Replace ASU Compressor Oil	6-4
6.3.3	Replace Brake Pads	6-5
6.3.4	Replace BCU Air Filters (MT & CT)	6-7
6.3.5	Replace ASU Desiccant Canisters	6-9
6.3.6	Drain ASU Cooler	6-11
6.3.7	Replace Motor Truck BCU Pressure Transducers (BCT, CVT, LWT)	6-13
6.3.8	Replace Center Truck BCU Pressure Transducers (BCT, CVT, LWT, MRT)	6-15
6.3.9	Replace Brake Disc	6-17
6.3.10	Replace MT BCU Pressure Switches (PBA, PBR, BCA, BCR)	6-22
6.3.11	Replace CT BCU Pressure Switches (BCR and BCA)	6-24
6.3.12	Replace Suspension Air Filters, Replace Filter Element	6-26
6.3.13	Replace ECU Circuit Boards	6-27
7.0	**LUBRICATION**	**7-1**
7.1	**Introduction**	**7-1**
8.0	**COMPONENT REMOVAL AND INSTALLATION**	**8-1**
8.1	**Introduction**	**8-1**
8.2	**Safety Information**	**8-1**
8.3	**Remove and Installation Procedures**	**8-2**
8.3.1	Replace Apply and Release Magnet Valve, MT (AMV, RMV)	8-2
8.3.2	Replace Apply and Release Magnet Valve, CT (AMV, RMV)	8-6
8.3.3	Replace Test Points (TP-CV1, TP-CV3, TP-CV4, TP-MR)	8-8
8.3.4	Replace Flange Mounted Test Points (TP-PB, TP-TP-BC, TP-LW, TP-MR)	8-11
8.3.5	Replace Parking Brake Cutout (PBCO)	8-14
8.3.6	Replace Emergency & Brake Magnet Valves (EMV, PBMV, FBCV)	8-16
8.3.7	Replace Dump Valve (DV)	8-20
8.3.8	Replace Load Limiting Valve (LLV)	8-23
8.3.9	Replace Relay Valve (RV)	8-24

TABLE OF CONTENTS

Chapter/Para **Page**

8.3.10 Replace Main Reservoir and Parking Brake Cutout Valve (MRCO, PBMRCO) 8-30
8.3.11 Replace Main Reservoir Check Valve (CV) 8-33
8.3.12 Replace Main Reservoir and Parking Brake Air Filters (PBFLT, FLT) 8-36

9.0 TROUBLESHOOTING 9-1
9.1 Introduction 9-1
9.2 Diagnostic Detected Failures 9-43
9.2.1 Events List 9-43
9.2.2 Explanation of the Table(s) of Events 9-43

INDEX I-1

APPENDIX A - TOD Screen A-1

APPENDIX B - Event Description Document TA37044/613, Rev. 08 ....B-1

THIS PAGE INTENTIONALLY LEFT BLANK

LIST OF ILLUSTRATIONS

Figure	Title	Page
2-1:	Brake Control Unit Pneumatic Schematic, Center Truck	2-2
2-2:	Brake Control Unit Components, Center Truck	2-4
2-3:	Brake Control Unit, CT Wiring Diagram	2-5
2-4:	Brake Control Unit Pneumatic Schematic, Motor Truck	2-6
2-5:	Brake Control Unit Components, Motor Truck	2-9
2-6:	Brake Control Unit, Motor Truck Wiring Diagram	2-10
2-7:	Parking Brake Applied Schematic	2-10
2-8:	Manual Parking Brake Release Cables	2-11
2-9:	Air Supply Unit	2-12
2-10:	ASU Pneumatic Diagram	2-13
2-11:	Air Supply Unit, Wiring Diagram	2-14
2-12:	Motor Compressor Unit	2-15
2-13:	Motor Compressor Unit Schematic	2-17
2-14:	Air Dryer Unit Pneumatic Schematic	2-18
2-15:	Canister 1 Regeneration Pneumatic Schematic	2-19
2-16:	Canister 2 Regeneration Pneumatic Schematic	2-20
2-17:	Check Valve Closed	2-21
2-18:	Check Valve Open	2-22
2-19:	Cutout Cock	2-25
2-20:	Air Filter, LA2100-T1	2-26
2-21:	Parking Brake Cutout Cock	2-27
2-22:	Relay Valve – Brake Release	2-29
2-23:	Relay Valve – Brake Apply	2-30
2-24:	Load Limiting Valve, DBV1-E – Working Position	2-33
2-25:	Load Limiting Valve, DBV1-E – Emergency Braking	2-34
2-26:	Magnet Valve	2-36
2-27:	Transducer, CT and BT BCU	2-37
2-28:	BCU Test Points	2-39
2-29:	Brake Apply and Release Switch	2-40
2-30:	Electronic Control Unit	2-41

LIST OF ILLUSTRATIONS

Figure	Title	Page
2-31:	Motor Truck ECU I/O	2-42
2-32:	Center Truck ECU I/O	2-43
2-33:	MB03B Main Board	2-49
2-34:	MB04 Main Board	2-49
2-35:	EB01 and EB02 Extension Boards	2-50
2-36:	PB01 Power Board	2-50
2-37:	CB09C Communications Board	2-51
2-38:	Brake Calipers	2-53
2-39:	Axle Mounted Brake Disc	2-54
2-40:	Brake Pad	2-55
2-41:	Air Reservoirs	2-55
2-42:	Dump Valve	2-56
2-43:	Dump Valve Schematic – Brakes Released	2-58
2-44:	Dump Valve Schematic – Brakes Applied without WSP	2-59
2-45:	Dump Valve Schematic – Brakes Released without WSP	2-60
2-46:	Dump Valve Schematic – Brakes Applied with WSP	2-61
2-47:	Dump Valve Schematic – Brakes Applied While Holding in WSP	2-62
2-48:	Sanding System Schematic	2-63
2-49:	Speed Sensors	2-67/68
5-1:	Oil Level Sight Glass	5-2
5-2:	Vacuum Indicator	5-3
5-3:	Main Reservoir	5-4
5-4:	Brake Reservoir	5-6
5-5:	ECU Inspection	5-7
5-6:	Brake Disc	5-10
5-7:	Acceptable Hair Cracks in Friction Surface	5-11
5-8:	Acceptable Incipient Cracks in Friction Surface	5-12
5-9:	Typical Through Crack in Friction Ring	5-13
5-10:	Typical Crack in Joining Bars	5-13
5-11:	Typical Through Crack in Connecting Flange	5-14

LIST OF ILLUSTRATIONS

Figure	Title	Page
5-12:	Scorch Marks on Disc	5-15
5-13:	Wear Limits of Friction Ring	5-16
5-14:	Wear Limits of Friction Ring	5-17
5-15:	Gap Limits of Friction Ring	5-18
5-16:	Brake Caliper Components	5-20
5-17:	Brake Pad Inspection	5-22
5-18:	Inspect Magnet Valve	5-23
5-19:	Parking Brake Cutout Valve Inspection	5-24
6-1:	Intake Air Filters	6-3
6-2:	Change Compressor Oil	6-5
6-3:	Replace Brake Pad	6-6
6-4:	Service BCU Air Filter	6-8
6-5:	Replace Desiccant Canisters	6-10
6-6:	Drain Air Cooler	6-12
6-7:	Replace Motor Truck Pressure Transducers	6-14
6-8:	Replace Center Truck Pressure Transducers	6-16
6-9:	Replace Brake Discs	6-18
6-10:	Friction Ring Locknuts Tightening Sequence	6-21
6-10a:	Measuring Wobble of Friction Ring	6-21
6-11:	Replace Pressure Switch BCU MT	6-23
6-12:	Replace Pressure Switch BCU CT	6-25
6-13:	Replace Suspension Air Filter Element	6-26
6-14:	Replace ECU Circuit Boards	6-28
8-1:	Replace Apply and Release Magnet Valve, MT BCU	8-5
8-2:	Replace Apply and Release Magnet Valve, CT BCU	8-7
8-3:	Test Points, MT BCU	8-9
8-4:	Test Points, CT BCU	8-10
8-5:	Flange Mounted Test Point, MT BCU	8-12
8-6:	Flange Mounted Test Point, CT BCU	8-13
8-7:	Parking Brake Cutout Valve, MT BCU	8-15

LIST OF ILLUSTRATIONS

Figure	Title	Page
8-8:	Emergency, Parking Brake Control Magnet Valve, MT BCU	8-17
8-9:	Emergency, Brake Control Magnet Valve, CT BCU	8-18
8-10:	Dump Valve, MT BCU	8-21
8-11:	Dump Valve, CT BCU	8-22
8-12:	Load Limiting Valve, MT BCU	8-25
8-13:	Load Limiting Valve, CT BCU	8-26
8-14:	Relay Valve, MT BCU	8-28
8-15:	Relay Valve, CT BCU	8-29
8-16:	Main Reservoir, Parking Brake Cutout Valve, MT BCU	8-31
8-17:	Main Reservoir Cutout Valve, CT BCU	8-32
8-18:	Main Reservoir Check Valve, MT BCU	8-34
8-19:	Main Reservoir Check Valve, CT BCU	8-35
8-20:	Air Filters, MT BCU	8-37
8-21:	Air Filters, CT BCU	8-38
9-1:	PTU Connection	9-44

LIST OF TABLES

Table	Title	Page
2-1.	Center Truck BCU Component Identification	2-3
2-2.	Motor Truck BCU Component Identification	2-8
2-3.	Input Signals	2-44
2-4.	Output Signals	2-47
2-5.	Sanding System Component Identification	2-64
3-1.	Scheduled Maintenance Index	3-1
4-1.	Special Tools	4-1
4-2.	List of Materials	4-2
5-1.	Brake Disc Parts List	5-9
6-1.	Brake Disc Parts List	6-19
9-1.	Friction Brake System Troubleshooting	9-1
9-2.	Air Supply Unit System Troubleshooting	9-3
9-3.	Motor Compressor Set Troubleshooting	9-4
9-4.	Air Dryer Troubleshooting	9-5
9-5.	Electronic Control Unit Troubleshooting	9-7
9-6.	Electronic Control Unit Fault Code Troubleshooting	9-9

THIS PAGE INTENTIONALLY LEFT BLANK

CHAPTER 1.0

GENERAL DESCRIPTION

1.1 Introduction

This chapter provides a general description and overview of the LACMTA Light Rail Vehicle (LRV) friction brake system.

The friction brake system contains the following sub systems:

- Air Supply System
- Brake Control System
- Disc Brake System
- Sanding System
- Wheel Slide Group
- Air Suspension System (refer to Section 1200)
- Track Brake System (refer to Section 1000)
- Electronic Control System

1.2 System Summary

The Brake System is a microprocessor controlled electro-pneumatic friction brake system. The system provides computer controlled dynamic/friction brake blending, wheel-slide control, and diagnostic functions for monitoring performance and reporting status information. All functions are performed on a per truck basis.

The Electronic Control Units (ECUs) also perform a variety of diagnostic tasks including checks of the computer hardware, braking equipment, and wheel-slide control devices. These checks are conducted on power up of the system and continuously during normal system operation. Error status information is stored in non-volatile memory for access through a diagnostic maintenance device and for passing information to the Vehicle Monitoring System (VMS).

Refer to Section 5.1 of the Schematic and Narrative Manual for additional information on the piping schematic.

The Electronic Control Unit includes the logic and electronic interfaces to:

- Interpret trainline brake commands,
- Receive feedback from the propulsion system for dynamic brake effort achieved,
- Command and receive feedback from the Brake Control Unit (BCU),
- Power and receive feedback from the pneumatic system sensors,
- Power and receive feedback from the speed sensors,
- Detect and correct wheel slip during braking,
- Monitor faults and diagnose the friction brake and pneumatic systems,
- Communicate with the Vehicle Monitoring System.

During service braking operation, the ECU reads commands from the vehicle Trainlines and the MVB communication bus. Based on a brake-achieved signal from the propulsion logic, the ECUs will command supplemental friction brake to ensure that the brake rate demand is met. The friction brakes can provide 100% of the braking effort required in the event that electric brakes are lost. During emergency braking initiated via the push button (Panic Brake) on the driver's console, all electronic brake control is bypassed and pneumatic controlled friction braking is provided via the emergency brake (Panic Brake) control devices of each Brake Control Unit (BCU).

Friction brake effort is controlled in the BCU, which operates as a closed-loop pressure regulator. A pair of electro-pneumatic solenoid valves called the Digital Pressure Controller (DPC) module, actuated by the ECU, produces an infinitely variable pre-control pressure based upon feedback from a pressure transducer. This pre-control pressure is used to pilot a pneumatic relay valve, which amplifies the volume of air in order to actuate the brake cylinders.

Service and emergency brake friction braking functions are controlled on a per truck basis by individual BCUs. For service braking, brake cylinder pressure is regulated by the ECU, which adjusts BC pressure to compensate for varying vehicle loads. The amount of vehicle loading is calculated using a suspension air bag pressure signal reported by a transducer connected to the equalized load weigh pressure on each truck.

During an Emergency Brake (EB) event, the EB trainline changes to a de-energized state causing the EB valve to bypass the ECU controlled DPC and supply Brake Supply Reservoir (BSR) air directly to the brake control circuit.

Brake control circuit air is then load weigh compensated using a Pressure Limiting Valve which regulates control pressure to the relay valve in response to airspring suspension pressures.

NOTE: The load limiting valve is configured to respond only to the higher BC pressures seen in emergency braking and not limit the lower service brake BC pressures.

Using this approach, the Emergency Brake pressure in the brake control circuit is generated through purely electro-mechanical means, requiring no reliance on ECU software.

During an emergency brake, the ECU/DPC commands a redundant EB pressure signal in the event that the emergency brake magnet valve gets stuck in the energized position. This redundant pressure signal is maintained until the no-motion signal is received and the panic brake push-button is reset.

During a Slide Controlled Emergency Brake (SCEB) event, the EB valve is energized, electro dynamic braking is enabled and track brakes are applied. The ECU and DPC generates load weigh compensated brake control circuit pressures in the same manner as service braking but with BC pressures designed to meet CPUC EB brake rates. Unlike EB, in the SCEB mode there is a dependency on ECU software to calculate and control the brake control pressure.

A Knorr VV120 Air Supply Unit (ASU) with spin-off/spin-on (disposable) canisters air dryer located on the B-end section of the vehicle delivers compressed air at a net rate of 19 CFM. The compressed air feeds the Main Reservoirs and MR Pipe throughout the vehicle. All pneumatic systems including braking and suspension are serviced from the MR Pipe.

The system is configured to provide independent control of the brake application of each truck in a vehicle. This includes:

- Separate brake ECUs for each truck.
- Separate BCUs for each truck.
- Independent speed monitoring of the truck axles controlled by the ECU as well as at least a single axle from another truck.
- Independent brake cylinder pressure monitoring for each truck is communicated to each ECU on a car.
- Independent load weigh monitoring for each truck. The truck air-spring pressure is provided to each ECU in a car.

The Brake Control Unit (BCU) is protected by a check valve mounted on each BCU manifold so that in the event that there is a loss of Main Reservoir pressure, the Brake Supply Reservoir provides the air capacity for five full service brake applications and releases at the AW3 passenger loading level. Each Brake Supply Reservoir has a 48.5 liter capacity. The Brake Supply Reservoirs supply the Brake Control Units with air through manifold mounted cut-out cocks and filters. The cut-out cocks are provided to enable maintenance to isolate the BCU.

The brake cylinder pressure passes from anti-skid valves mounted on the Brake Control Unit and through a cut-out cock. The anti-skid valve modules are provided to allow the wheelslide protection system to pulse control (release/apply/hold) the brakes during sliding. The valves are directly operated by the computer controlled wheel-slide system to manipulate the brake cylinder pressure until adhesion is restored between the wheel and rail.

The brake cylinder line is also equipped with a pressure transducer and two pressure switches. Brake cylinder apply and release pressure switches are provided in the brake cylinder line for each truck, located after the friction brake cut-out cocks, such that the indication switches always reveal the true system state. The pressure transducer (5.9) senses the brake cylinder pressure down-stream from the brake cutout valve.

All three truck's brake cylinder pressures and the main reservoir pressure are monitored on the TOD's located on each end of the vehicle.

The truck-mounted equipment includes two pneumatic pressure applied disc-brake units on each Motor Truck and four on the Center Truck. The Motor Truck Calipers are equipped with spring applied park brakes. A total of six magnetic track brakes are also provided, one pair per truck. The Motor Trucks are also provided with sanding equipment for the wheels on the lead axle.

The model WZKK Brake Caliper unit is an air-operated, direct acting, brake that serves, together with axle-mounted brake discs, as a service-brake in rail vehicles. It is a compact combination of a brake cylinder, slack adjuster, caliper levers and brake pads. Eight calipers are required per vehicle. The Motor Trucks contain one caliper with park brake per axle. The Center Truck utilizes all service brake only calipers with two calipers per axle.

The WZKK Brake Caliper design has the following features:

- Modular construction consisting of a separate brake cylinder, slack adjuster, and parking brake spring pack (when the parking brake feature is included).
- Compact, lightweight occupying minimum space in the truck assembly.
- Torsionally rigid caliper levers.
- Minimum caliper lever joints and bearings that are encapsulated for long life and low noise.
- Brake unit suspension that permits large lateral and tilting movements.

The axle mounted brake disc consists of a split 520 x 110 mm gray cast iron friction ring bolted to a steel hub via a 12 bolt plansitz interface. This plansitz interface, with a specific bolt torque, allows for free thermal expansion of the friction ring resulting from braking. As a result, thermal cracking is reduced. The steel hub is pressed onto the axle.

CHAPTER 2.0

FUNCTIONAL DESCRIPTION

2.1 Introduction

This chapter provides a functional description of equipment components in the friction brake system. The friction brake system is an electro-pneumatic system and provides braking effort to stop the vehicle and maintains a zero speed condition until commanded otherwise.

2.1.1 Brake Control Unit, Center Truck

See Figure 2-1, Figure 2-2, Figure 2-3 and Table 2-1.

The Brake Control Unit (BCU) houses the sensors and pneumatic controls for the electro-pneumatic braking. The BCU is mounted under the car as close to the bogie as permitted to minimize the lengths of the pneumatic hoses and piping to the brake calipers. A simplified pneumatic schematic for the Center Truck BCU is shown in Figure 2-1 and Table 2-1 lists abbreviations used in this manual section.

In the BCU, check valve preserves Brake Reservoir (48.5 Liter) compressed air for the pneumatic Brake Control Unit (BCU) in the event of a depressurization of the Main Reservoir Pipe. For BCU maintenance or in the event of a component failure the vented cutout cock must to be switched-off. This valve cuts off the main reservoir supply to the emergency brake valve, relay valve and digital pressure controller, which releases the air in the service brake circuit to atmosphere. Air filter (FLT) provides particle filtration to 25 micron protecting the pneumatic components of the BCU from debris.

Depending on the brake demand, the digital pressure controller DPC creates a pre-control volume pressure. The CT DPC is equipped with an Apply Magnet Valve (AMV), a Release Magnet Valve (RMV) and a Control Volume Transducer (CVT). The MT DPC is equipped with an AMV, a CVT, and two RMVs. Two RMVs are included on the MT DPC in order to decrease the holding brake release time. The feedback signal from the control volume transducer measures the present pressure in the pre-control volume pressure circuit. If the signal from the transducer does not correspond to the commanded pressure, the apply or release magnet valve is activated to obtain the correct pressure. As long as the Emergency Magnet Valve (EMV) is energized and Friction Brake Cutout Valve (FBCV) is de-energized, pre-control volume pressure flows through these valves and the load limiting valve to the Relay Valve.

The EMV and FBCV are failsafe. A power loss or an emergency brake command via the trainline (safety loop) initiates an emergency brake application. In this event, the EMV and FBCV are de-energized and the main reservoir pressure is connected to the load limiting valve.

In normal operation, air from the pre-control volume passes directly through the EMV, FBCV and the load limiting valve to the Relay Valve. In these cases the brake cylinder pressure corresponds to the control volume pressure. The brake cylinder pressure created by the Relay Valve passes through the Dump Valve.

Figure 2-1: Brake Control Unit Pneumatic Schematic, Center Truck

The Dump Valve consists of both apply and release magnet valves and allows the ECU to control wheel slide by holding brake cylinder pressure or modulating the reduction and re-application of brake cylinder pressure until the slide is eliminated. A single dump valve is utilized for each truck, providing per-truck control of wheel-slide.

A Brake Cylinder Cutout (BCCO) is located between the Dump Valve and the truck in order to isolate and vent the air pressure supplied to the calipers for maintenance or in the event of a failure of truck equipment. The position of the BCCO is supplied to the ECU.

The pneumatic control circuit is equipped with three pressure transducers. Brake Cylinder Transducer (BCT) monitors the brake cylinder pressure. Load Weigh Transducer (LWT) provides the load weigh signal to the Brake Control Unit. Main Reservoir Transducer (MRT) senses and reports the Main Reservoir pressure. All three pressure transducers transmit an analog signal to the CT ECU.

The control volume test fittings (TP-CV1, TP-CV3, and TP-CV4) serve to monitor the pre-control pressure volume. Brake Cylinder Test fitting (TP-BC) is provided to monitor the brake cylinder pressure and to check the pressure transducer output signal. Load Weight Test fitting (TP-LW) enables monitoring or simulation of the air bag pressures, as necessary for adjustment of the load limiting valve. Main Reservoir Test fitting (TP-MR) is provided to monitor the main reservoir pressure and to check the pressure transducer output signal.

The brake cylinder line is also equipped with a transducer (BCT) and two pressure switches. EP service brake apply (BCA) and release (BCR) pressure switches are provided in the brake cylinder line for each truck, located after the friction brake cut-out cocks, such that the indication switches always reveal the true system state. The pressure transducer senses the brake cylinder pressure down-stream from the brake cutout valve.

Table 2-1. Center Truck BCU Component Identification

ID Number	Description	Abbreviation
Part of 6.1	Apply Magnet Valve	AMV
Part of 6.1	Release Magnet Valve	RMV
Part of 6.1	Control Volume Transducer	CVT
6.2	Test Point-Control Volume 1	TP-CV1
6.3	Emergency Magnet Valve	EMV
6.4	Friction Brake Cutout Valve	FBCV
6.5	Load Limiting Valve	LLV
6.6	Test Point Control Volume 4	TP-CV4
6.7	Relay Valve	RV
6.8	Anti-Skid Valve (Dump Valve)	DV
6.9	Brake Cylinder Transducer	BCT
6.10	Load Weigh Transducer	LWT
6.11	Test Point Load Weigh	TP-LW
6.12	Test Point Brake Cylinder	TP-BC
6.13	Main Reservoir Transducer	MRT
6.14	Main Reservoir Test Point	TP-MR
6.15	Main Reservoir Cutout Cock	MRCO
6.16	Main Reservoir Filter	FLT
6.17	Main Reservoir Check Valve	CV
6.18	Test Point - Control Volume 3	TP-CV3
6.19	Brakes Applied Switch	BCA
6.20	Brakes Released Switch	BCR

The Center Truck BCU component configuration is shown in Figure 2-2.

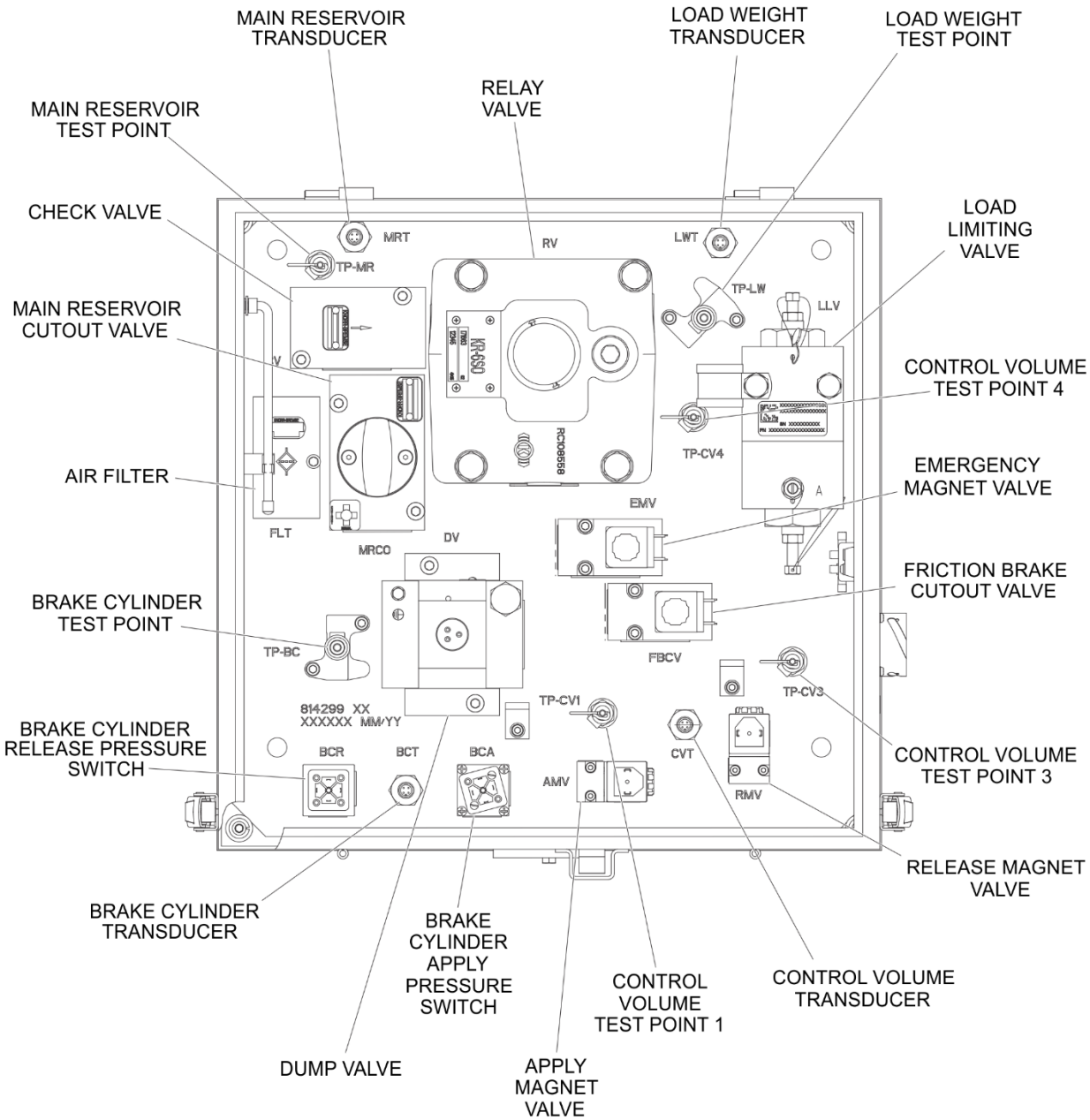

Figure 2-2: Brake Control Unit Components, Center Truck

[redacted]

2.1.2 Brake Control Unit, Motor Truck

See Figure 2-4, Figure 2-5, Figure 2-6 and Table 2-2.

The Brake Control Unit (BCU) houses the sensors and pneumatic controls for the electro-pneumatic braking. The BCU is mounted under the car as close to the bogie as permitted to minimize the lengths of the pneumatic hoses and piping to the brake calipers. A simplified pneumatic schematic for the Motor Truck BCU is shown in Figure 2-4 and Table 2-2 lists abbreviations used in this manual section.

In the BCU, check valve preserves Brake Reservoir (48.5 Liter) compressed air for the pneumatic Brake Control Unit (BCU) in the event of a depressurization of the Main Reservoir Pipe. For BCU maintenance or in the event of a component failure the vented cutout cock must to be switched-off. This valve cuts off the main reservoir supply to the emergency brake valve, relay valve and digital pressure controller, which releases the air in the service brake circuit to atmosphere. Air filter (FLT) provides particle filtration to 25 micron protecting the pneumatic components of the BCU from debris.

Depending on the brake demand, the digital pressure controller DPC creates a pre-control volume pressure. The DPC is equipped with an Apply Magnet Valve (AMV), two Release Magnet Valves (RMV) and a Control Volume Transducer (CVT). The feedback signal from the control volume transducer measures the present pressure in the pre-control volume pressure circuit. If the signal from the transducer does not correspond to the commanded pressure, the apply or release magnet valves are activated to obtain the correct pressure. As long as the Emergency Magnet Valve (EMV) is energized and Friction Brake Cutout Valve (FBCV) is de-energized, pre-control volume pressure flows through these valves and the pneumatic load limiting valve to the Relay Valve. The additional release magnet valve is to decrease the holding brake release time.

The EMV and FBCV are failsafe. A power loss or an emergency brake command via the trainline (safety loop) initiates an emergency brake application. In this event, the EMV and FBCV are de-energized and the main reservoir pressure is connected to the load limiting valve.

Figure 2-4: Brake Control Unit Pneumatic Schematic, Motor Truck

In normal operation, air from the pre-control volume passes directly through the EMV, FBCV and the load limiting valve to the Relay Valve. In these cases the brake cylinder pressure corresponds to the control volume pressure. The brake cylinder pressure created by the Relay Valve passes through the Dump Valve.

The Dump Valve consists of both apply and release magnet valves and allows the ECU to control wheel slide by holding brake cylinder pressure or modulating the reduction and re-application of brake cylinder pressure until the slide is eliminated. A single dump valve is utilized for each truck, providing per-truck control of wheel-slide.

A Brake Cylinder Cutout (BCCO) is located between the Dump Valve and the truck in order to isolate and vent the air pressure supplied to the calipers for maintenance or in the event of a failure of truck equipment. The position of the BCCO is supplied to the ECU.

The pneumatic control unit is equipped with two pressure transducers. Brake Cylinder Transducer (BCT) monitors the brake cylinder pressure. Load Weigh Transducer (LWT) provides the load weigh signal to the Brake Control Unit. Both pressure transducers transmit an analog signal to the MT ECU.

The control volume test fittings (TP-CV1, TP-CV3, and TP-CV4) serve to monitor the pre-control pressure volume. Brake Cylinder Test fitting (TP-BC) is provided to monitor the brake cylinder pressure and to check the pressure transducer output signal. Load Weight Test fitting (TP-LW) enables monitoring or simulation of the air bag pressures, as necessary for adjustment of the load limiting valve. Park Brake Test fitting (TP-PB) is provided to monitor the park brake pressure and to check the pressure switch output signals.

The brake cylinder line is also equipped with two pressure switches. EP service brake apply and release pressure switches are provided in the brake cylinder line for each truck, located after the friction brake cut-out cocks, such that the indication switches always reveal the true system state.

In addition to service braking described above, the Motor Truck calipers are equipped with a spring applied park brake control feature, see Figure 2-4. The parking brake circuit is equipped with a vented cutout cock (PBMRCO) to isolate the parking brake circuit from the brake supply reservoir. The air filter (PBFLT) protects the parking brake equipment against any airborne in-line debris. A 3/2-way Park Brake Magnet Valve (PBMV) controls the operation of the park brake.

The park brake is integrated into the WZKK service brake caliper and has a spring applied air to-release brake operation. In event of a power loss, the parking brake returns to its de-energized state which vents air from the park brake cylinder to atmosphere through the relay valve. There are two vented cutout cocks to vent pressure on the parking brake circuit either before (PBMRCO) or after (PBCO) the parking brake valve.

Two pressure switches (PBA and PBR) are provided to monitor the parking brake status. The pressure switch serves to monitor the parking brake released and to monitor the parking brake applied condition. The test fitting (TP-PB) is provided to check the pressure setting of the pressure switches and to verify the pressure in the parking brake circuit.

The park brake pneumatic circuit includes an anti-compounding function prohibiting a compounding of caliper arm forces that may result from the park brake and service brakes being on simultaneously. As service brake pressure is applied to the brake cylinder, the park brake cylinder is also pressurized overcoming the park brake application spring. As service brake cylinder pressure is released, the park brake spring extends applying the park brake.

Table 2-2. Motor Truck BCU Component Identification

ID Number	Description	Abbreviation
Part of 5.1	Apply Magnet Valve	AMV
Part of 5.1	Release Magnet Valve	RMV
Part of 5.1	Release Magnet Valve 2	RMV2
Part of 5.1	Control Volume Transducer	CVT
5.2	Test Point-Control Volume 1	TP-CV1
5.3	Emergency Magnet Valve	EMV
5.4	Friction Brake Cutout Valve	FBCV
5.5	Load Limiting Valve	LLV
5.6	Test Point-Control Volume 4	TP-CV4
5.7	Relay Valve	RV
5.8	Anti-Skid Valve (Dump Valve)	DV
5.9	Brake Cylinder Transducer	BCT
5.10	Load Weigh Transducer	LWT
5.11	Test Point Load Weight	TP-LW
5.12	Test Point Brake Cylinder	TP-BC
5.13	Park Brake Cutout Cock	PBCO
5.15	Main Reservoir Cutout Cock	MRCO
5.16	Main Reservoir Filter	FLT
5.17	Main Reservoir Check Valve	CV
5.18	Test Point Control Volume 3	TP-CV3
5.19	Park Brake Main Reservoir Cutout	PBMRCO
5.20	Park Brake Filter	PBFLT
5.21	Park Brake (Magnet) Valve	PBMV
5.22	Test Point Park Brake	TP-PB
5.23	Park Brake Applied Switch	PBA
5.24	Park Brake Released Pressure Switch	PBR
5.25	Brakes Applied Switch	BCA
5.26	Brakes Released Switch	BCR

The Motor Truck BCU component configuration is shown in Figure 2-5.

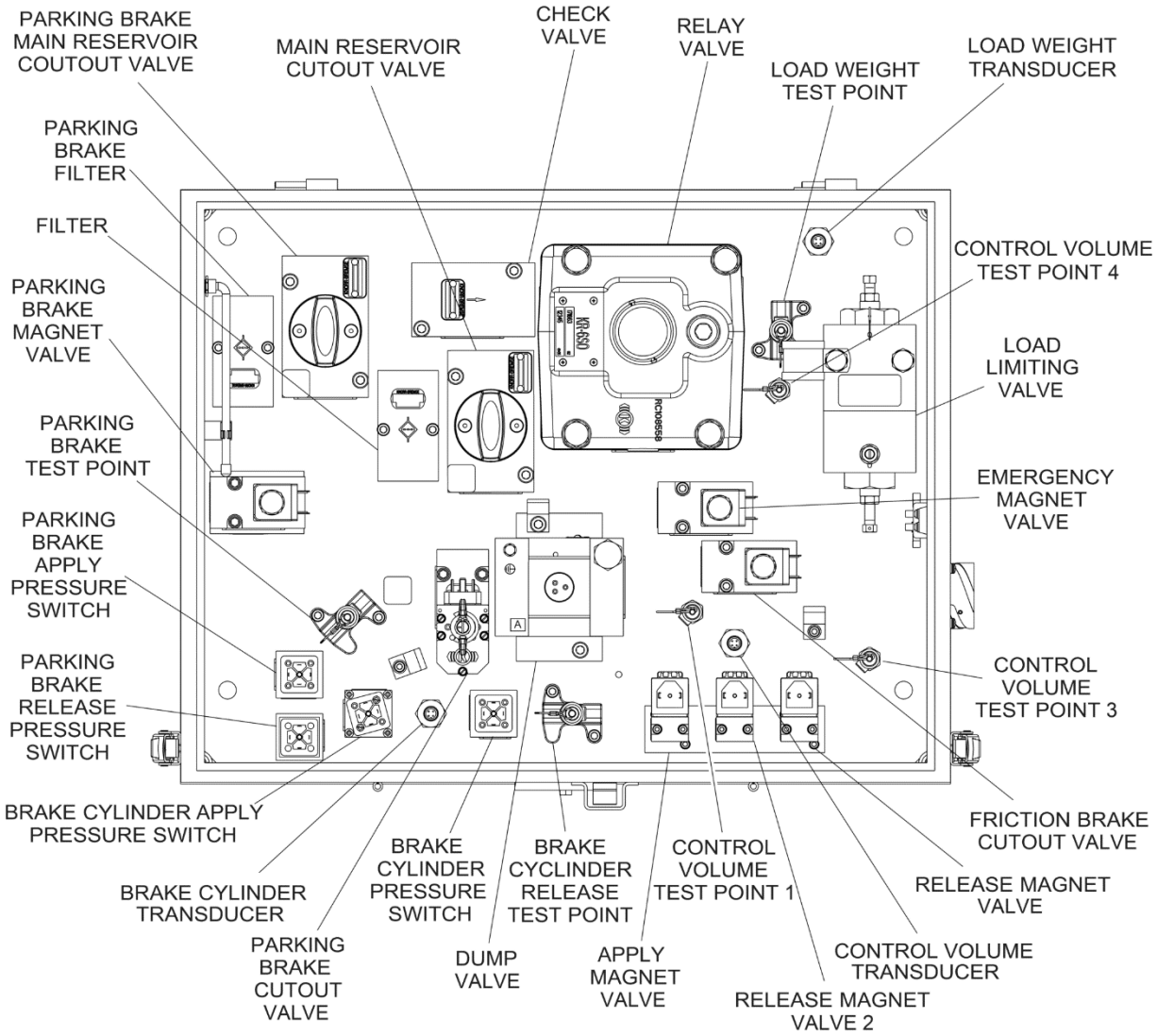

Figure 2-5: Brake Control Unit Components, Motor Truck

[redacted]

2.1.3 Manual Park Brake Release

See Figure 2-7, Figure 2-8 and Table 2-2. The park brake system for the P3010 is an indirect, spring-applied brake cylinder. Full parking brake force results by venting the park brake cylinder to atmosphere through the Park Brake Magnet Valve. This causes the park brake spring to apply force to the caliper arms generating brake forces on the axle disc. During normal service, the parking brake is released by applying air pressure from the brake supply 48.5 liter reservoir. Manual park brake release is needed to move a vehicle without air.

[redacted]

Figure 2-7: Parking Brake Applied Schematic

During maintenance or in case of a park brake failure all of the park brakes can be released on a per truck basis. To fully release the parking brake, the annunciated cutout cock (PBCO) on the BCU should be in the cut-out position. With cutout cock in the open position, the parking brake cylinders could be re-activated, releasing the brake. With PBCO closed, the parking brake is fully applied and the parking brake can only be mechanically released using remote control cables. Remote control cables are operated with a pull force of 25–51 lbf to release the parking brake and are accessible from both sides of each motor truck, see Figure 2-8.

[redacted]

2.1.4 Air Supply Unit

The Air Supply Unit (ASU) includes the Motor Compressor Unit; see Figure 2-9, Starter Box, Frame Weldment and Air Dryer Unit.

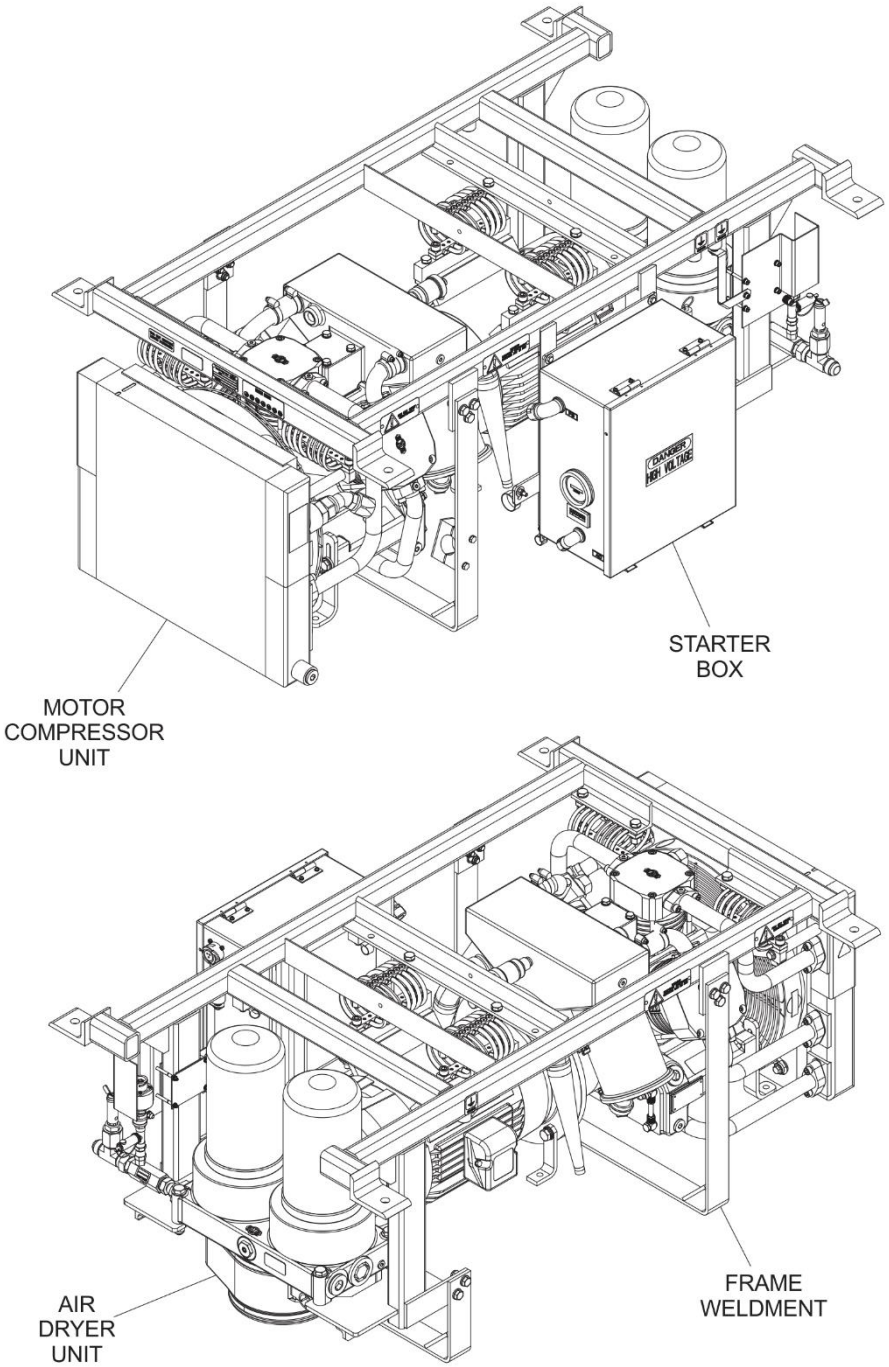

Figure 2-9: Air Supply Unit

A Knorr VV120 Air Supply Unit (ASU) with spin-off/spin-on (disposable) canister Air Dryer unit (AD) delivers and maintains 130 psi to 150 psi air to the main reservoir, and the main reservoir pipe, at a net rate of 24 SCFM. The ASU is mounted on the B-End. All pneumatic systems including braking, suspension and sanding are serviced from the MR pipe, see Figure 2-10.

The main reservoir (MR) charges the brake reservoirs (BR), which are isolated through check valves mounted on the brake control units (BCU). In this manner, the supply reservoirs are charged to main reservoir pressure, and a protected supply of air is assured for friction brake applications. Brake Reservoir air will also flow to the park brake control circuit on each motor truck BCU, which controls the spring-applied park bakes on each.

Two safety valves are integrated into the ASU, one between the aftercooler outlet and the air dryer, set at 190 PSI, and the other at the outlet of the air dryer after the check valve, set at 160 PSI.

The main reservoir pressure sensor is a P/I transducer integrated into the center truck BCU and read by the ECU. In the ECU the signal is scaled and reported over MVB.

[redacted]

[redacted]

2.1.5 Motor Compressor Unit

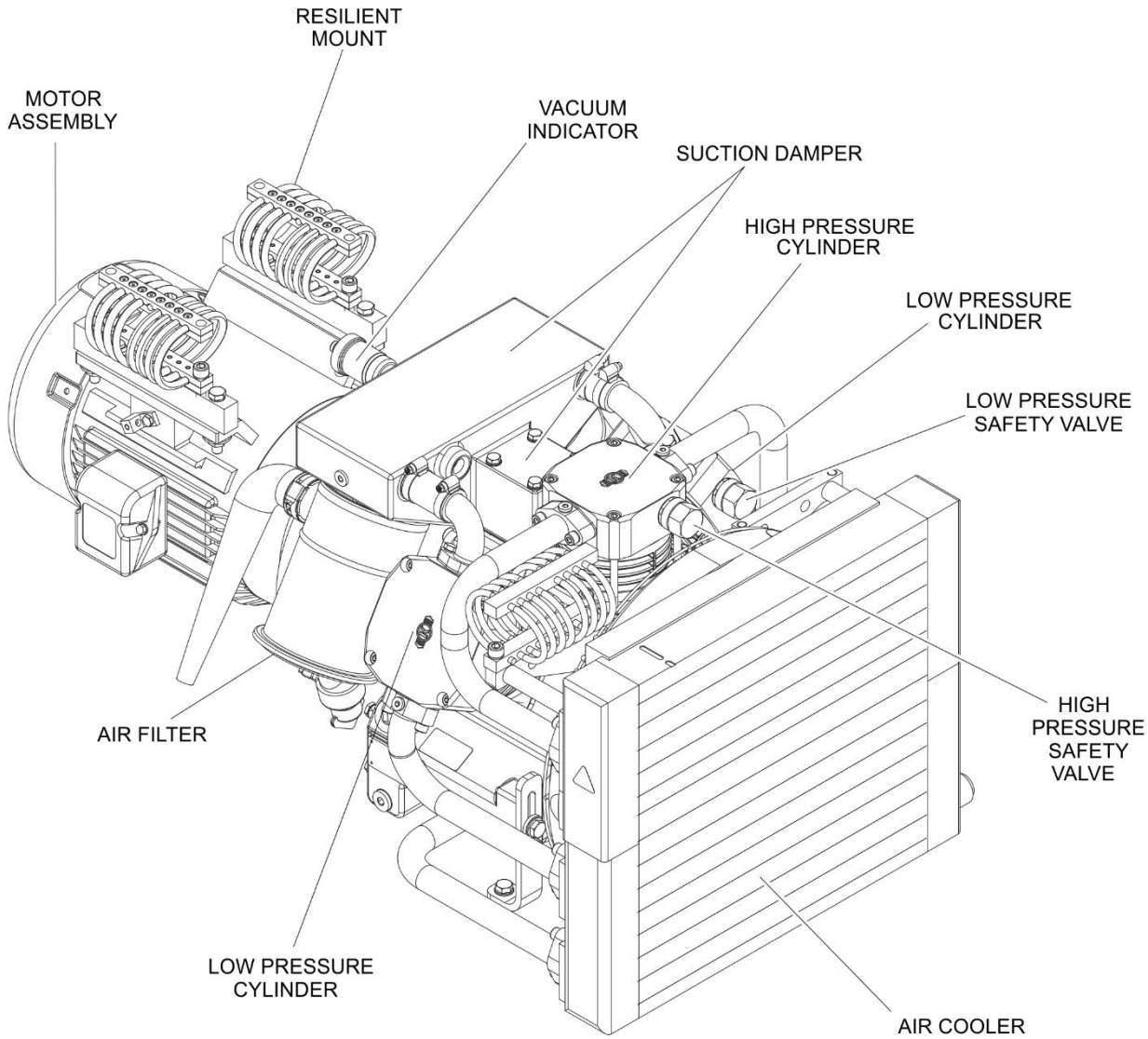

Figure 2-12: Motor Compressor Unit

The capacity of the compressor unit is sufficient to supply all the pneumatic loads for both the friction brake and air suspension subsystems for two coupled 6-axle LRV's.

The ASU consists of a two-stage, 3 piston motor compressor unit (Figure 2-13) with a twin tower air dryer as shown in Figure 2-14. There is low pressure (LP) safety valve protection for the low pressure portion of the ASU. The LP safety valve is set to 58 PSI (4 bar) and is mounted directly on one of the low pressure cylinders. There is also high pressure (HP) safety valve protection for the high pressure portion of the ASU. The HP safety valve is set to 195 PSI (13.5 bar) and is mounted directly on the high pressure cylinder. These valves prevent damage from excessive cylinder pressure. The VV120 motor compressor unit contains a 208 VAC, 3-phase, 10 hp induction motor (see Figure 2-12) that is coupled to the compressor using a permanent metallic flexible coupler.

A vacuum indicator is used to check the condition of the air filters. The vacuum indicator trips at 0.725 psi (50 mbar) pressure differential, indicating a clogged air filter, see Figure 2-12.

Control of the motor is achieved via a motor starter and a pressure switch. Upon reaching the low pressure limit of 130 psi, the pressure switch closes which then energizes the compressor motor. 28.5 VDC is provided to the solid state pressure switch as operating voltage. The starter has an additional set of contacts for annunciation that the compressor is running. An hour-meter/cycle counter monitors and displays the compressor's usage.

The compressor contains both an inter-cooler and an after-cooler to control the outlet temperature of the compressed air. The air intake system includes dual air filters and silencers that are designed to filter air contaminants and reduce the compressor noise.

A pressure safety valve protects the air dryer should the air pressure reach 190 psi. Another safety valve after the air dryer protects the main reservoir should the air pressure reach 160 psi.

A steel frame structure supports the combined motor compressor unit, the air dryer, the starter box, and other auxiliary equipment. The frame is designed for installation under the car in a safety-hung arrangement and supports the compressor and motor should suspension bolts or the wire rope isolation mount(s) fail. The frame also supports the ASU when it is removed from the car and placed on the floor.

Figure 2-13: Motor Compressor Unit Schematic

2.1.6 Air Dryer

The air dryer, as shown in Figure 2-9 and pneumatic schematic Figure 2-14 is a dual chamber adsorption unit that contains an integrated oil separator and removes both moisture and oil from the compressed air. The unit has an electronically controlled chamber switchover valve and timer circuit that allows one chamber's desiccant regeneration while the other chamber is drying air. The unit contains a check valve to prevent the main reservoir air from venting when the compressor is off.

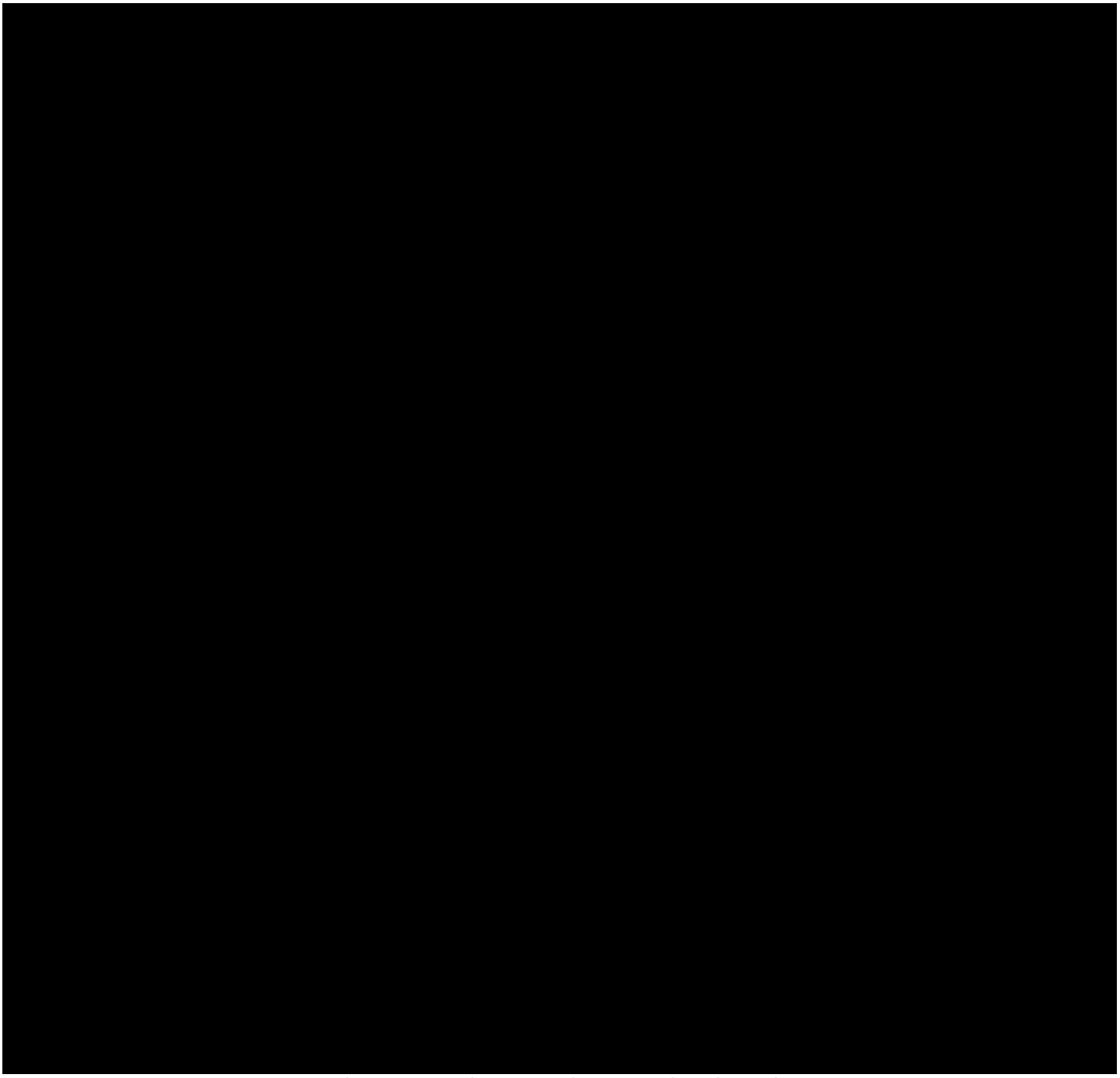

Figure 2-14: Air Dryer Unit Pneumatic Schematic

Operation of the air dryer is as follows: Desiccant regeneration and air drying occur in parallel and are controlled electronically as shown in Figure 2-15 and Figure 2-16. Every minute during compressor operation, a magnet valve switches desiccant towers. The electronic control keeps track of the amount of time a tower is recharged. If the compressor switches off before a regeneration cycle has been completed, the controller will complete the regeneration cycle on the same tower when the compressor restarts. Every second changeover cycle, the air dryer is vented. The vent valve is electrically heated, with the heaters powered from the low voltage power system. A cycle counter (CC on Figure 2-11), mounted on the Starter Box, provides a visual count of the number of times the changeover cycle occurs.

[redacted]

Figure 2-15: Canister 1 Regeneration Pneumatic Schematic

[redacted]

Figure 2-16: Canister 2 Regeneration Pneumatic Schematic

Discharge air from the ASU air dryer is less than 15°F above the ambient air temperature.

2.1.7 Check Valve (CV)

There is one check valve per BCU. One check valve is mounted to each MT BCU and one to the CT BCU, see Figure 2-10.

Model RV19-T check valve, see Figure 2-17 and Figure 2-18 maintains air pressure in the friction brake supply system in the event the main reservoir piping losses pressure. The check valve maintains the pressure by blocking the flow of air back toward the main supply line (A2). During normal operation the air flows freely through the check valve toward the BCU and parking brake reservoirs (A1).

The check valve minimum opening pressure differential is 2.9 psi (0.2 bar) with a maximum operating pressure of 150 psi (10.3 bar). The ASU provides compressed air to the friction brake system at 130 psi (9 bar) to 150 psi (10.3 bar).

Each check valve is secured to the BCU manifold using two machine screws. Two O-rings provide sealing on each check valve, and a locating pin ensures proper orientation.

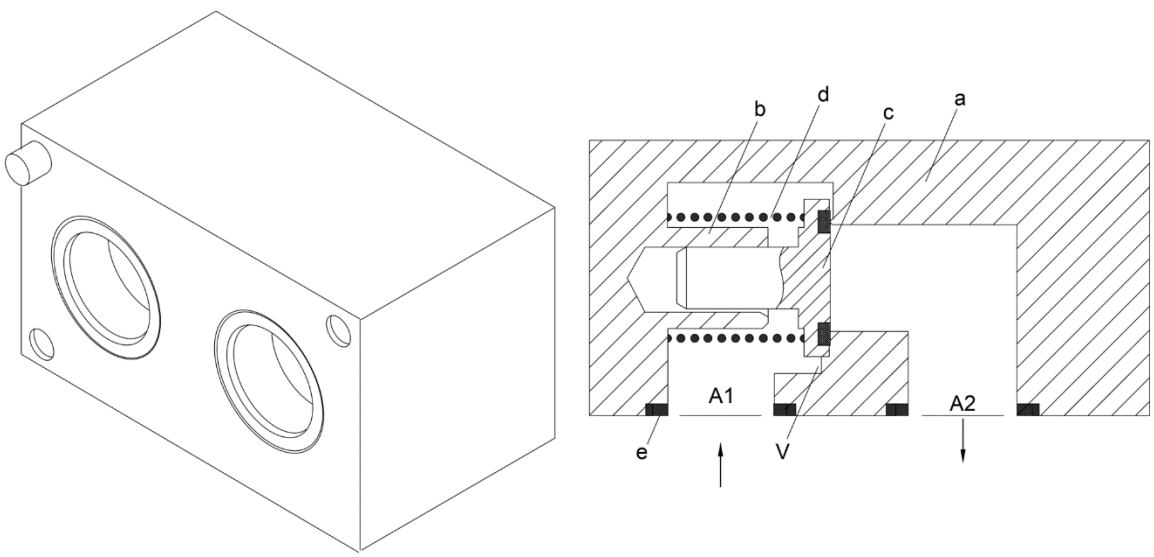

a – Housing	d – Compression spring	A1 – Inlet port
b – Valve guide	e – O-ring	A2 – Outlet port
c – Valve head	V – Valve seat	

Figure 2-17: Check Valve Closed

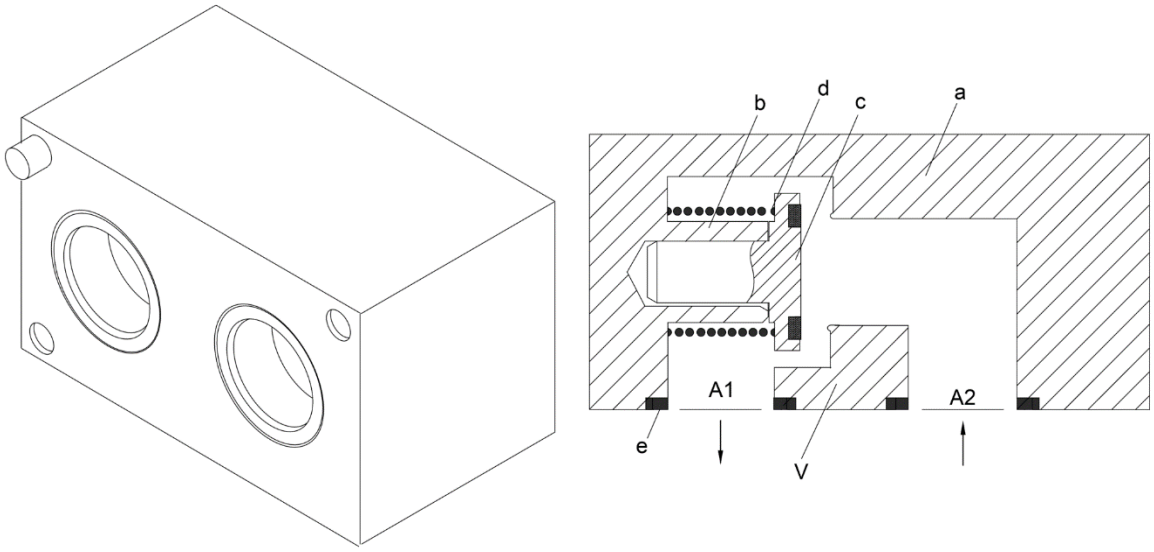

a – Housing
b – Valve guide
c – Valve head
d – Compression spring
e – O-ring
V – Valve seat
A1 – Inlet port
A2 – Outlet port

Figure 2-18: Check Valve Open

2.1.8 Cutout Cock (MRCO, PBMRCO)

In the friction brake system the MRCO and PBMRCO cutout cocks open or close the air flow between the BCU and the main and parking brake reservoirs, see Figure 2-10.

The PBMRCO is used when cleaning the park brake air filter (PBFLT) on the park brake line or may be used in conjunction with the MRCO to isolate MR and BSR supply air from the primary BCU components.

When the MRCO is closed, park brake cylinder air is vented through the PBCO and the park brakes are spring-applied. Closing both the PBCO and brake cylinder cutout cock (external to the BCU) may be used to verify the application of the park brake caliper.

When the handle on the front of each cutout cock is in the vertical position, the valve is cut in and air can travel freely. When the handle is in the horizontal position, the air supply is cut out and all residual pressure downstream is vented.

See Figure 2-19, there are two cutout cocks per MT BCU and one per CT BCU. One cutout cock MRCO and one PBMRCO are mounted on the MT BCU and one cutout cock MRCO mounted on the CT BCU. Each cutout cock is secured to the BCU manifold using two machine screws. Three O-rings provide sealing on each cutout cock, and a pair of locating pins ensures proper orientation.

2.1.9 Air Filter (FTL, PBFLT)

The model LA2100-T1 air filter keeps dirt out of downstream equipment and by doing so protects system components from premature wear.

There is a total of five air filters on the friction brake BCU manifolds, see Figure 2-1 and Figure 2-4. Air filter FLT and filter PBFLT are mounted on the MT BCU and one filter FLT is mounted on the CT BCU. Each filter is secured to the BCU manifold using two machine screws. All filters use two sealing O-rings each to prevent air leakage between the mating components.

See Figure 2-19, the FLT filters air coming from the main reservoir piping as it enters the CT and MT brake control unit manifold. The PBFLT is found only on the MT BCU and is located downstream from the brake supply reservoir and filters all air before it enters the parking and service brake circuit.

For servicing, all three filter elements are inside filter housings and accessed from the top of the air filter housing.

2.1.10 Parking Brake Cutout Cock (PBCO)

The PBCO cutout cock, see Figure 2-21 is used to charge and shut off air flow to the parking brake mounted on the MT rail vehicles. The three pin electrical cable connected to the cutout cock is used to indicate the open or closed position of the cutout cock. The PBCO cutout cock is mounted only on the MT BCU, see Figure 2-20.

This cutout cock is a 3/2-way isolating valve that is rated for a maximum working pressure of 150 psi (10.3 bar) and used within the temperature range of -40°C to +70°C (-40°F to +158°F).

Two machine screws mount each cutout cock to the BCU manifold and three O-rings provide sealing, while a locating pin ensures proper orientation. When the handle on the front of each is in the horizontal position, the valve is cut in and when the handle is in the vertical position, the valve is cut out.

When the handle is in the horizontal position the path from port A3 to port A1 is open. Air pressure input is isolated while residual pressure within the brake cylinder is vented by the force of the compression spring (16) pressing the valve head (17) onto the valve seat (18), sealing off the port A2.

Normal operation can resume when the handle is in the vertical position. Valve tappet (10) pushes the valve head (17) downwards when the camshaft (11) is rotated. This action closes the valve seat (19) and opens the valve seat (18). Port A1 is sealed off at the valve seat (19). The path from port A2 to port A3 is open.

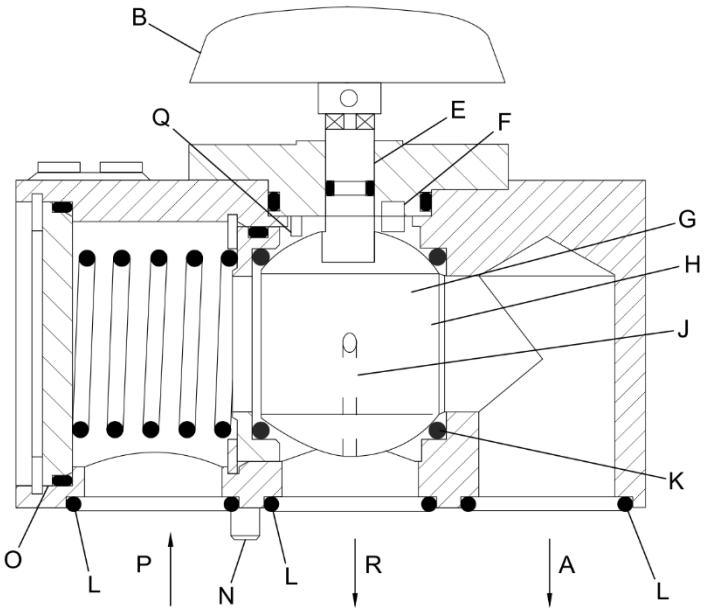

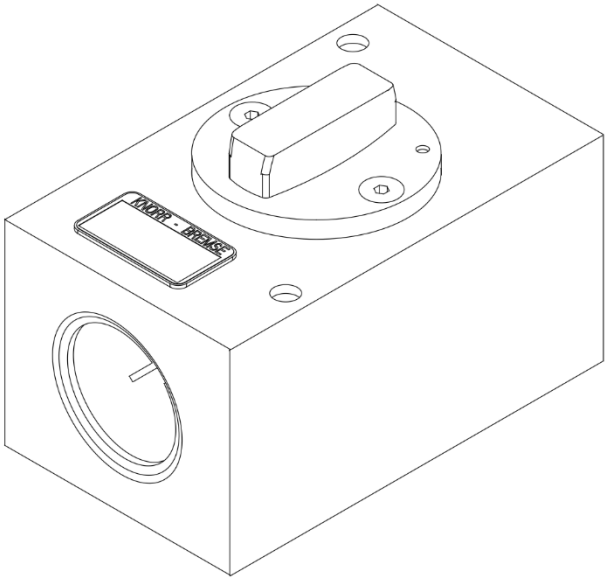

A – Consumer port
B – Handle
E – Pin
F – Clamping pin
G – Ball
H – Through hole
J – Vent bore
K – Gasket
L – O-ring
N – Clamping pin
O - Cover
P – Feed port
Q – Pin
R – Vent port

Figure 2-19: Cutout Cock

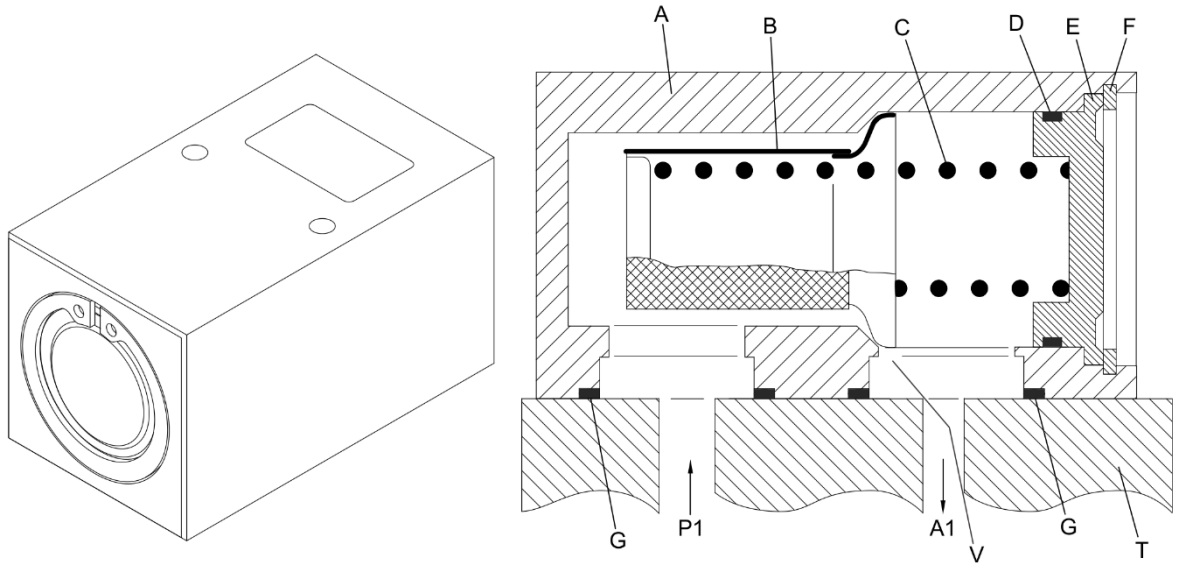

A – Filter casting
B – Sieve element
C – Compression spring
D – O-ring
E – Cover
F – Retaining ring, internal
G – O-ring
T – BCU manifold
V – Valve seat
A1 – Consumer port
P1 – Supply port

Figure 2-20: Air Filter, LA2100-T1

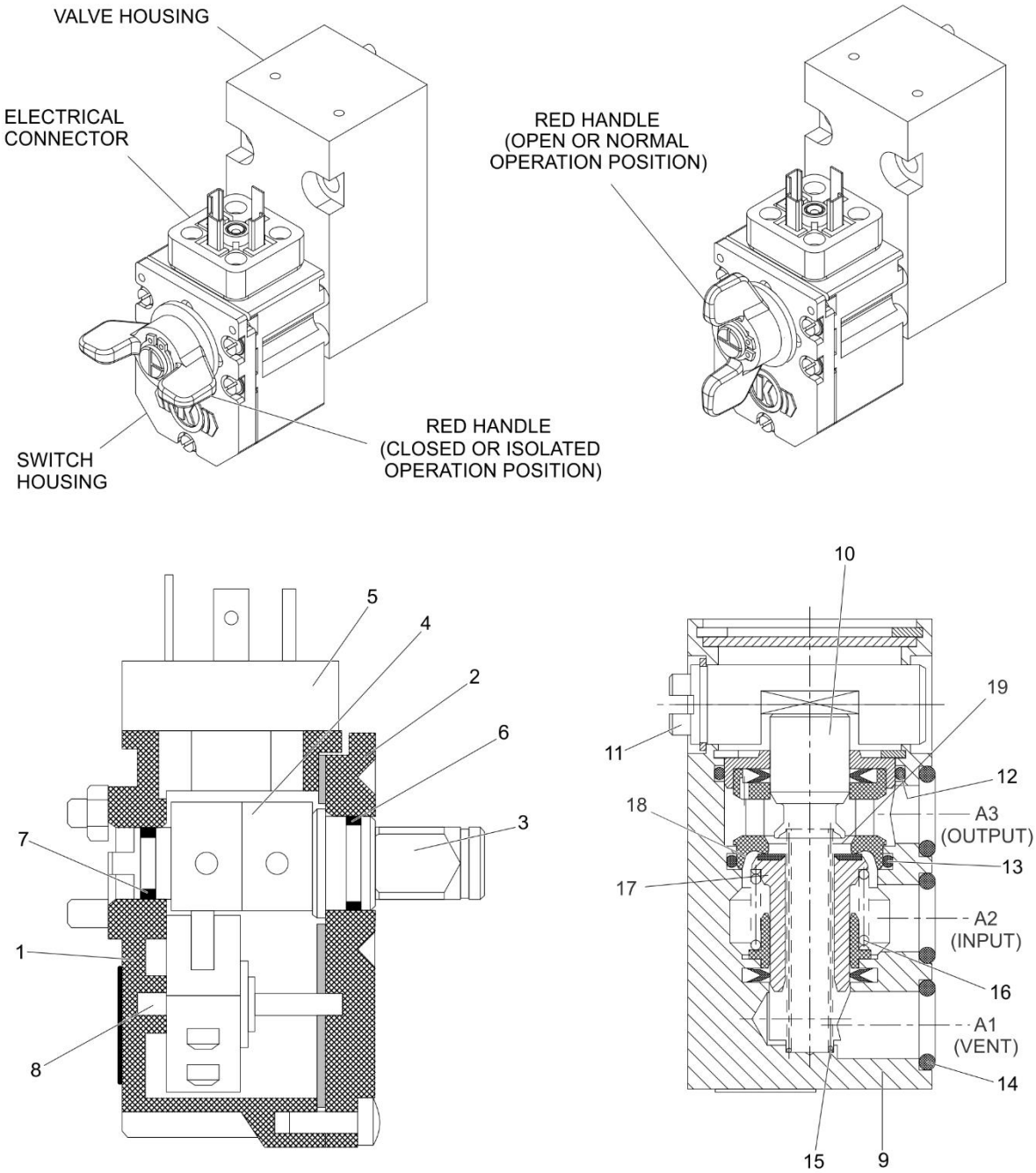

1 – Housing	7 – O-ring	13 – O-ring
2 – Cover	8 – Straight Pin	14 – O-ring
3 – Shaft	9 – Housing	15 – Compression spring
4 – Cam Disc	10 – Valve tappet	16 – Compression spring
5 – Plug Switch	11 – Camshaft	Handle - Red
6 – O-ring	12 – O-ring	

Figure 2-21: Parking Brake Cutout Cock

2.1.11 Relay Valve (RV)

One relay valve, see Figure 2-4, Figure 2-5, Figure 2-22, and Figure 2-23, is on each CT and MT BCU. Four bolts supplied with the relay valve are used to secure the valve to each BCU manifold and three O-rings seal the relay to the manifold.

The pressure created by the AMV flows to the Relay Valve (RV) via the Load Limiting Valve (LLV). Under normal operating conditions, the pre control volume pressure flows through the LLV and into the RV. The RV increases or decreases the brake cylinder pressure based on the input pre control volume pressure.

2.1.11.1 Initial State

The pressure in supply reservoir (R) is applied to inlet valve seat (V1). The inlet valve is closed by the force of compression spring (f). Outlet valve seat (V2) is in the venting position, i.e. compressed air from port (C) is vented to atmosphere through exhaust (O). No precontrol pressure (Cv) is applied.

2.1.11.2 Brake Application

The surface (Cv) of diaphragm piston (c) is charged by precontrol pressure (Cv) and outlet valve seat (V2) is closed. The force of compression spring (f) is overcome. Inlet valve seat (V1) is opened. The pressure applied to the inlet valve can flow as C-pressure to the brake cylinders and simultaneously go to the surface (C) of diaphragm piston (c). The developing C-pressure and the thrust of compression spring (f) cause diaphragm piston (c) to return to its mid-position. Inlet valve seat (V1) closes. Outlet valve seat (V2) stays closed. The pressures C and Cv are equal.

2.1.11.3 Brake Release

The Cv-pressure applied to diaphragm piston (c) is, vented entirely through a distributor valve. The applied C-pressure opens outlet valve seat (V2). The C-pressure is vented entirely to atmosphere through the outlet valve. Outlet valve seat (V2) stays open and diaphragm piston (c) remains vented.

2.1.11.4 Step-by-Step Brake Application and Release

As the brakes are applied step by step, basically the same process as that described above takes place, except that the pressure step chosen at any one instant is the only one effective. The C-pressure steps in the brake cylinder are formed according to the Cv setting. As the brakes are released step by step, the Cv-pressure falls only by a given pressure difference, thereby making the C-pressure drop accordingly.

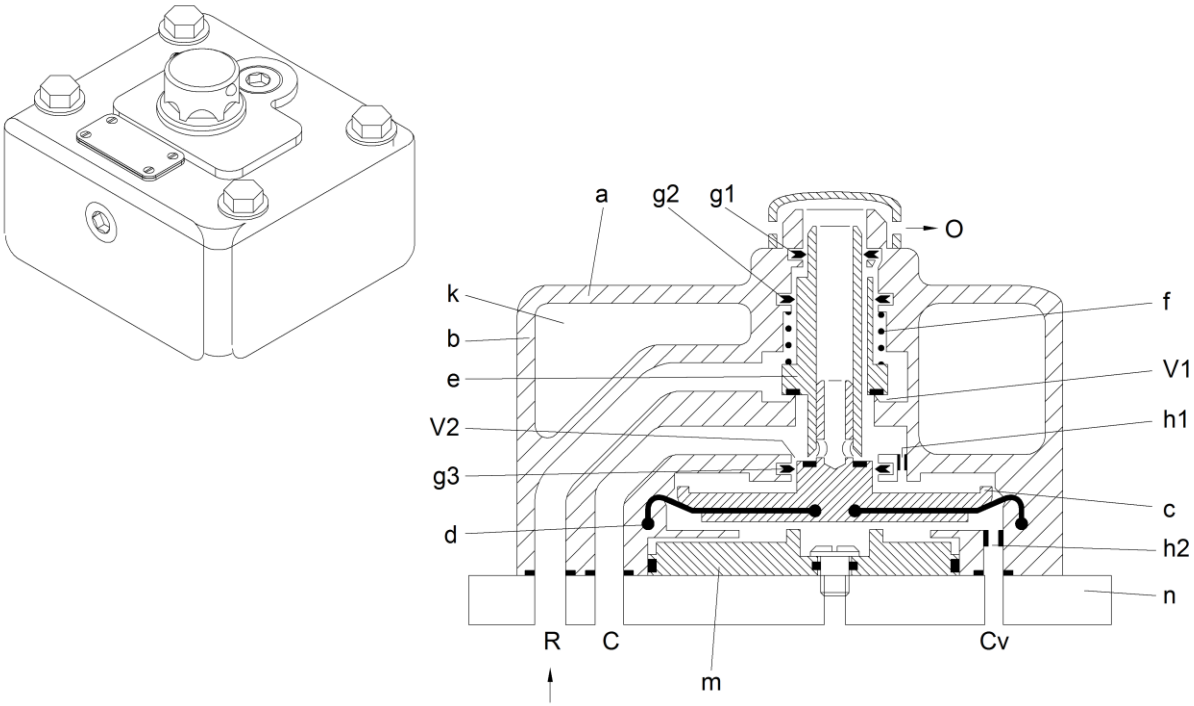

a – Relay valve
b – Body
c – Diaphragm piston
d – Cup diaphragm
e – Valve guide
f – Compression spring
g – K-ring
h - Choke

k – Control chamber Cv
l – Valve bracket
m – Manifold interface
n – BCU manifold
V1 – Inlet valve seat
V2 – Outlet valve seat

C – BC pressure
Cv – Precontrol pressure
O – Exhaust
R – Supply reservoir

Figure 2-22: Relay Valve – Brake Release

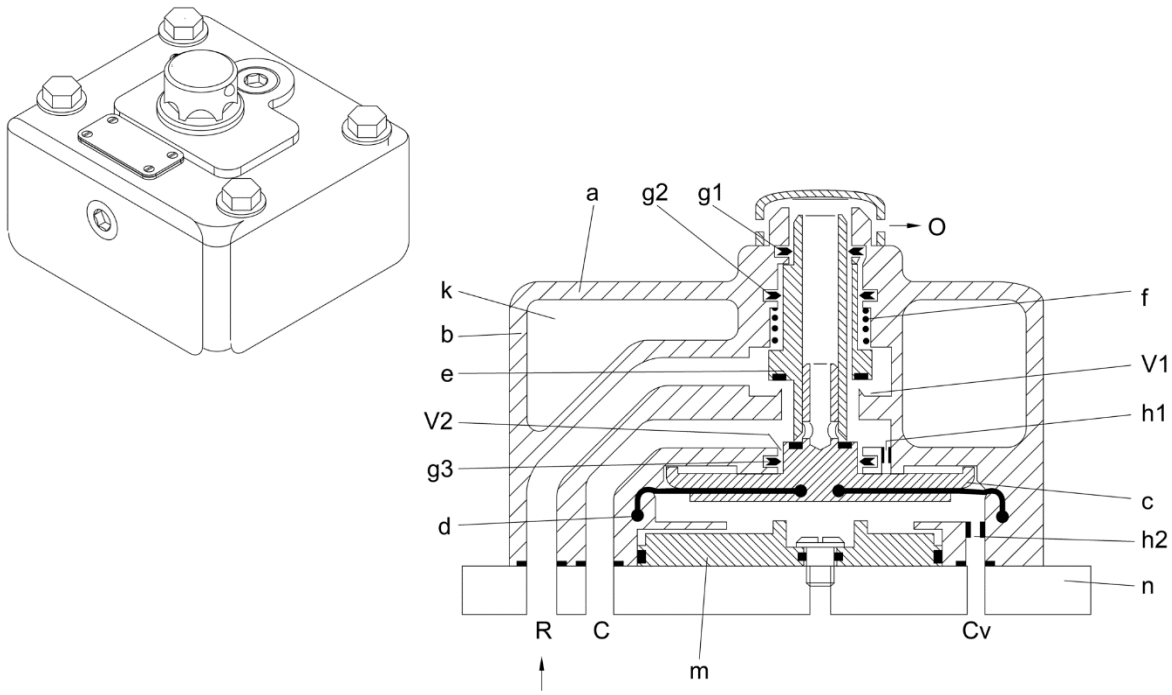

a – Relay valve
b – Body
c – Diaphragm piston
d – Cup diaphragm
e – Valve guide
f – Compression spring
g – K-ring
h - Choke

k – Control chamber Cv
l – Valve bracket
m – Manifold interface
n – BCU manifold
V1 – Inlet valve seat
V2 – Outlet valve seat

C – BC pressure
Cv – Precontrol pressure
O – Exhaust
R – Supply reservoir

Figure 2-23: Relay Valve – Brake Apply

2.1.12 Load Limiting Valve (LLV)

The load limiting valve LLV, see Figure 2-4, Figure 2-5, Figure 2-24 and Figure 2-25, is used in the pre-control circuit of active air brake systems to limit the pre-control pressure according to the payload. LLV has no effect in all levels of service braking. LLV responds only to higher BC pressures, as in emergency braking.

The load limiting valve performs the following functions:

- Limits the pre-control pressure in the pre-control circuit of active air brake systems according to the payload.
- Prevents the vehicle from being over braked by an emergency application. For this purpose, it limits the pre-control pressure rise according to the payload, thereby restricting the amount by which pressure is built up in the brake cylinders.
- Prevents an empty or partly laden vehicle from over braking when, in the case of service braking; the pre-control pressure is not corrected for load (because of pre-control malfunctions).
- Suppresses over braking and under braking in case the pneumatic load signal fails.
- Used only in EB braking and in normal service braking the load weight is processed by the ECU.

Two machine screws secure the pressure limiting valve to the BCU manifold and three O-rings provide sealing between the manifold and valve.

2.1.12.1 Pneumatic Load Signal (T) Present

2.1.12.1.1 Working Position

The Cv1-pressure is missing or is lower than the pressure admitted by the load T, i.e. the pressure limiting valve is permanently open (Cv2=Cv1).

The thrust of compression spring (e) backs up the force of the T-pressure acting on diaphragm piston (a); this latter force is relayed to diaphragm piston (j) through balance beam (m) and tappet (k). The piston rod lifts valve head (h) off charging valve seat (V21) against the force of the compression spring. Venting valve seat (V22) stays closed.

2.1.12.1.2 Emergency Braking

The Cv1-pressure is higher than the pressure admitted by the load T. To avoid overbraking, the pressure limiting valve prevents the Cv2-pressure from rising beyond a defined level.

The air flows through open valve seat (V21) into the Cv2-chamber until the Cv2-pressure reaches a level at which its effect on the diaphragm piston (j) predominates and pushes the latter downwards. Supported by spring force, valve head (h) follows the movement of diaphragm piston (j) to the point where valve seat (V21) is closed again.

When the vehicle is transporting a heavier payload, the T-pressure is higher, and the force acting on diaphragm piston (j) through the balance beam is hence greater. Consequently, valve seat (V21) is only closed again at a higher Cv2-pressure, and the brake force of the brake cylinder is amplified accordingly.

2.1.12.2 Pneumatic Load Signal T is Not Present

2.1.12.2.1 Working Position

The Cv1-pressure is missing or is lower than the pressure admitted by the predefined minimum load pressure Tmin, i.e. the pressure limiting valve is permanently open (Cv2=Cv1).

The thrust of compression spring (e) is transmitted to diaphragm piston (j) through balance beam (m) and tappet (k). The piston rod lifts valve head (h) off charging valve seat (V21) against the force of the compression spring. Venting valve seat (V22) stays closed.

2.1.12.2.2 Emergency Braking

The Cv1-pressure is higher than the Cv-pressure admitted by the predefined minimum load pressure Tmin. The pressure limiting valve prevents the Cv2-pressure from rising beyond a defined level. The vehicle remains braked at minimum level, i.e. representing the empty state.

If the pneumatic load signal and, hence, the load-controlled force component at diaphragm piston (j) were to fail, the pressure rise in the Cv2-chamber would end prematurely, leaving an insufficient level in the Cv2-pipe. The vehicle would be underbraked in this case.

To avoid any such occurrence in the case of its failure, the pneumatic load signal T is simulated by the force of compression spring (e) acting on the tappet of diaphragm piston (a). The magnitude of the mechanical load signal is variable, being chosen to match Tmin.

The arrangement therefore ensures that brake application is equivalent to that for an empty vehicle if and when emergency braking is initiated without a T-pressure signal.

2.1.12.3 Release After Emergency Braking

The brakes are released when the Cv1-pressure is reduced.

Valve seat (V21) opens like a check valve in case the Cv1-pressure falls below the Cv2-pressure. The Cv2-pressure can then follow the falling Cv1-pressure until the Cv2-chamber and the Cv2-pipe are empty. Valve seat (V22) stays closed.

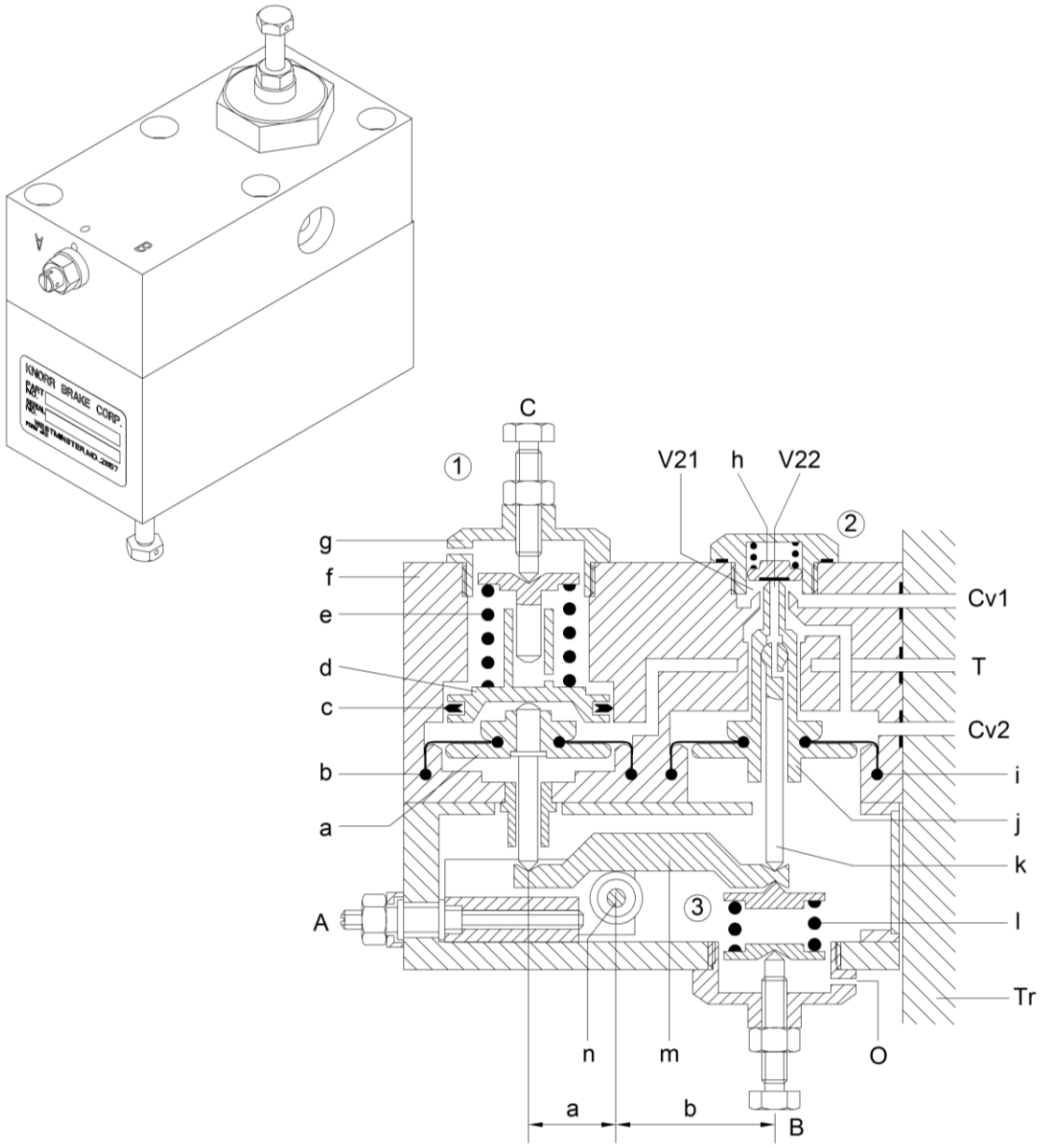

1 – Load signal transducer	2 – Cutoff member	n – Fulcrum
a – Diaphragm piston	h – Valve head	A – Adjustment screw
b – Diaphragm	I – Diaphragm	B – Adjustment screw
c – K-ring	j – Diaphragm piston	C – Adjustment screw
d – Piston	k – Tappet	Tr – Bracket
e – Compression spring	l – Compression spring	O – Breather hole
f – Body	3 – Mechanical assembly	V21 – Valve seat (charging)
g – Screw plug	m – Balance beam	V22 – Valve seat (venting)
		Cv – Precontrol pressure
		T – Pneumatic load signal

Figure 2-24: Load Limiting Valve, DBV1-E – Working Position

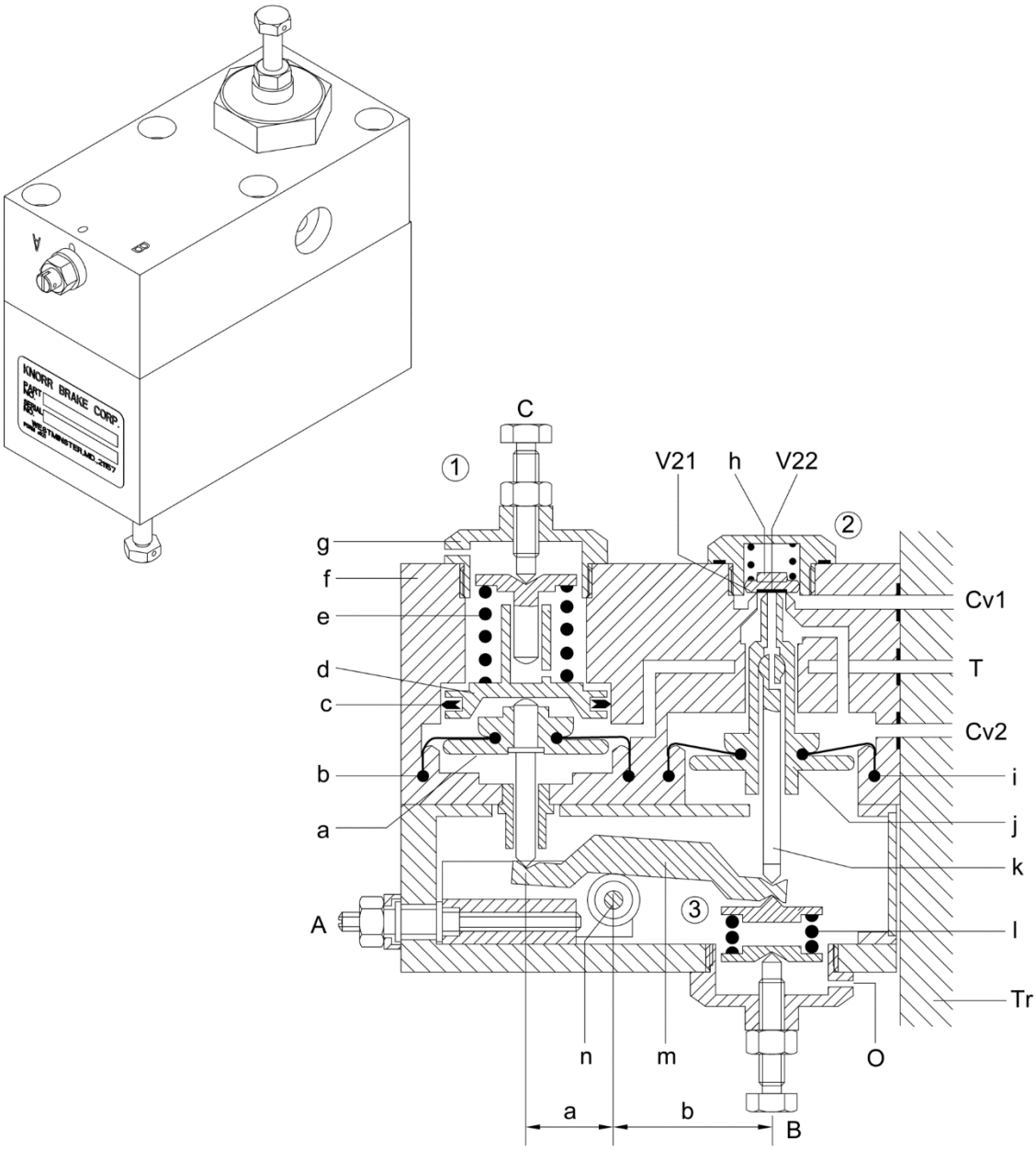

1 – Load signal transducer	2 – Cutoff member	n – Fulcrum
a – Diaphragm piston	h – Valve head	A – Adjustment screw
b – Diaphragm	I – Diaphragm	B – Adjustment screw
c – K-ring	j – Diaphragm piston	C – Adjustment screw
d – Piston	k – Tappet	Tr – Bracket
e – Compression spring	l – Compression spring	O – Breather hole
f – Body	3 – Mechanical assembly	V21 – Valve seat (charging)
g – Screw plug	m – Balance beam	V22 – Valve seat (venting)
		Cv – Precontrol pressure
		T – Pneumatic load signal

Figure 2-25: Load Limiting Valve, DBV1-E – Emergency Braking

2.1.13 Magnet Valves (EMV, FBCV, PBMV)

There are a total of eight magnet valves on all of the P3010 BCUs, see Figure 2-5, Figure 2-10, and Figure 2-26, in the friction brake system. Three are mounted on each MT BCU and two on the CT BCU. The parking brake magnet valve (PBMV) is not on the CT BCU. Each valve is secured to BCU manifold using two machine screws and three O-ring seals provide sealing between the valve and manifold. Each valve connects to the BCU cable assembly which connects to the trainline safety loop.

The emergency brake valve (EMV) and brake cutout valve (FBCV) are failsafe. A power loss or an emergency brake command via the trainline (safety loop) will initiate an emergency brake application. In this event the emergency magnet valve (EMV) and cutout valve (FBCU) are de-energized and the main reservoir pressure is connected to the pneumatic load weight pressure limiting valve (LLV).

The parking brake magnet (PBMV) is a 3/2 way valve mounted on the MT BCU. This valve is used to control the operation of the motor trucks parking brake.

As long as the emergency brake valve (EMV) is energized and cutout valve (FBCV) is de-energized, normal pre-control volume pressure flows through these two valves to the pressure limiting valve (LLV) and to the KR-6 relay valve (RV).

2.1.13.1 Neutral Position - Deenergized State

The magnet valve is in neutral as long as valve magnet (b) is deenergized. The control air from A4 is cut off. Valve head (d) is pressed onto valve seat (V1) by compression spring (h). This action closes the passage between ports A2 and A3.

Piston (c) is pushed to its right end position by compression spring (e). Since the armature of the magnet coil is pressed onto valve seat V3 by spring force, the air passage from port (A4) to the back of piston (c) is shut off. The chamber at the back of piston (c) is vented through valve seat (V4). As a result, valve seat (V2) is opened, and so is the air passage between ports (A1) and (A3).

2.1.13.2 Working Position - Energized State

Valve magnet (b) is energized, the magnet valve goes to the working position. The control air from port (A4) is passed onwards.

The magnet armature is attracted against the spring force. Valve seat (V3) is opened and valve seat (V4) is closed.

Piston (c) is charged by control air from port (A4) and moved to the left end position against the thrust of compression spring (e). Valve seat (V2) is then closed and valve seat (V1) opened. The compressed air flows from port (A2) to port (A3); port (A1) is shut off to hold the pressure. The magnet valve returns to neutral when the valve magnet is deenergized.

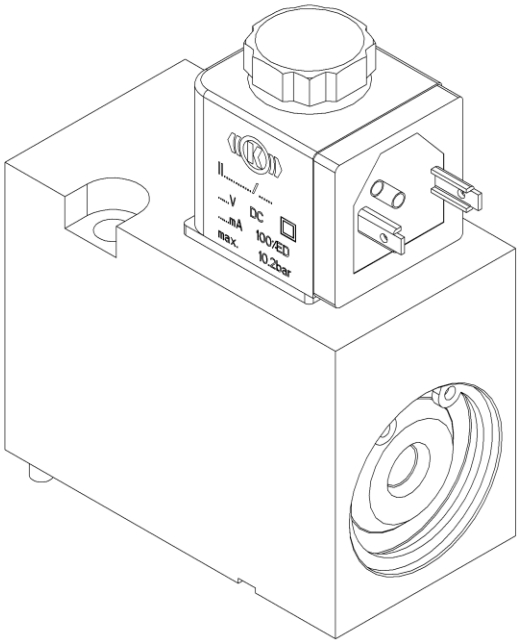

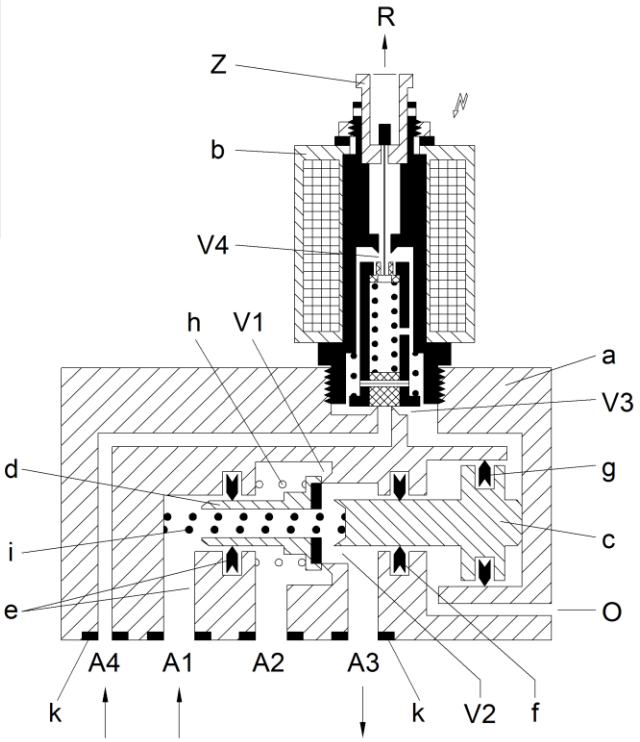

a – Basic magnet valve	h – Compression spring	O – Breather port
b – Valve magnet	I – Compression spring	R – Exhaust port
c – Piston	k – O-rings	V – Valve seat
d – Valve head	A1 – Air port	Z – Hand Control
e – K-ring	A2 – Air port	
f – K-ring	A3 – Output port	
g – K-ring	A4 – Control air port	

Figure 2-26: Magnet Valve

2.1.14 BCU Pressure Transducers (CVT, LWT, BCT, MRT)

There are a total of ten pressure transducers, see Figure 2-27 on the three BCU manifolds. Four are mounted on the CT BCU and three are mounted on each MT BCU. Each includes an integrated sealing O-ring and is connected to the BCU wiring harness. Refer to Figure 2-2, Figure 2-5, Table 2-1 and Table 2-2 for BCU transducer locations and identification.

- Pressure Range, max – 145 psi (10 bar)
- Electrical Connector – 4 pin (pin 1 voltage, pin 3 signal, pins 2, 4 not connected)
- Supply Voltage – 24 VDC
- Output Signal – Linear 4 – 20 mA
- Operating Temperature - -40^0 C to 85^0 C (-40^0 F to 185^0 F)
- Torque – 17 ± 1.7 ft-lbs (dry)

The pressure transducers serve the following functions:

Control Volume Pressure Transducer (CVT) is used within the digital pressure control circuit taking a pressure measurement directly from the control volume and converting it into an electrical signal to be used by the ECU to control output pressure by the AMV and RMVs to the brake cylinder.

Load Weigh Transducer (LWT) is used within the leveling system and provides a pressure measurement at the truck air bag converting it into an electrical signal to be used by the ECU to control friction brake effort during brake mode and by the TCU to control dynamic braking during brake mode and to control tractive effort during propulsion mode. The transducer is located downstream of the pressure (load) limiting valve on the BCU circuit.

Brake Cylinder Transducer (BCT) is used to measure brake caliper pressure on each motor and center truck. The transducer is located between the brake apply and brake release pressure switches on the brake caliper circuit and transmits a signal to the local ECU to control the caliper braking on both motor trucks and the center truck.

Main Reservoir Transducer (MRT) is used to measure pressure at the main reservoir piping as it enters the BCU manifold. The transducer transmits a signal to the local ECU to inform the operator of the pressure level of the main reservoir. It is located before the main reservoir check valve in the BCU air supply circuit.

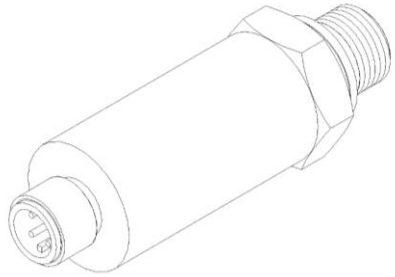

Figure 2-27: Transducer, CT and BT BCU

2.1.15 BCU Test Points (TP)

There are flange-mounted and direct-mounted test points on the CT and MT BCU manifolds see Figure 2-28. Both types are used to read air pressure with the flange mounted test port capable of injecting air into the manifold. Refer to Figure 2-2, Figure 2-5, Table 2-1 and Table 2-2 for BCU test point locations and identification.

The flange-mounted test points are secured to the BCU manifold with two screws and use a locating pin to ensure proper installation; two O-rings are used to seal the test point to the manifold. Pressing the pushbutton on the side of the test point releases the protective plug or Staubli nipple. Pressing the nipple in one click into the test point allows for reading, and pressing the nipple two clicks allows for air injection for troubleshooting.

The direct-mounted test points mount to the BCU using 1/4 NPT thread. These test points are read-only, meaning they cannot facilitate the injection of air into the manifold.

Test Point TP-LW is flanged mounted and located on all three BCU manifolds. This test point measures the leveling circuit air pressure for the CT and both MT. It is located upstream of the LLV and LWT and is the last port in the BCU leveling circuit before brake caliper hose connection.

Test Point TP-PB is flanged mounted and located on MT BCU manifolds. This test point measures air pressure for the parking brake circuit for both motor trucks. It is located downstream of the PBCO, PBA and PBR switches and is the last port in the BCU parking brake circuit before the parking brake hose connection.

Test Point TP-BC is flanged mounted and located on all three BCU manifolds. This test point measures air pressure for the service brake cylinder circuit for the CT and both MT. It is located downstream of the brake cylinder cutout cock, BCA and BCR switches and is the last port in the BCU service brake circuit before the brake hose connection.

Test Point TP-CV1, TP-CV3 and TP-CV4 are direct mounted and measure control volume pressure downstream of the DPC. Each test point is mounted on the CT and MT manifolds.

- TP-CV1 measures control volume output to the EMV.
- TP-CV3 measures EMV pressure out to the LLV.
- TP-CV4 measures the load compensated LLV output to the RV.

Test Point TP-MR is direct mounted to the CT manifold. It measures air pressure from the main reservoir piping to the CT BCU. It is located before the main reservoir check valve in the CT BCU air supply circuit.

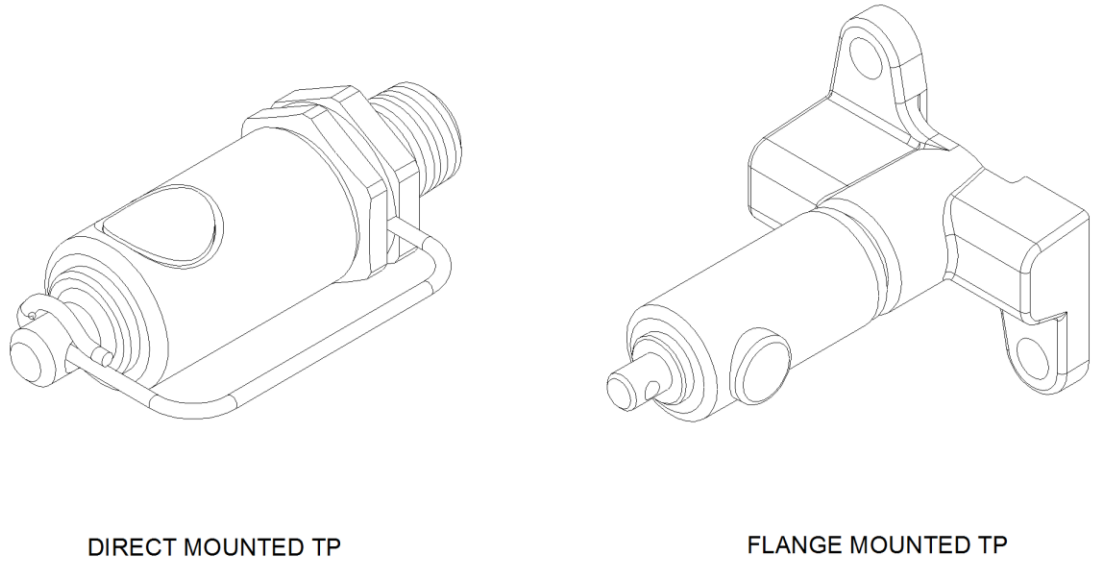

Figure 2-28: BCU Test Points

2.1.16 Brake Apply and Brake Release Switch (BCA, BCR)

The BCA and BCR switches, see Figure 2-5 and Figure 2-29, work together to inform the ECU whether or not “Friction Brakes Applied” or “Friction Brake Released” condition has been met. Both switch types have a three prong electrical connector that connects to the BCU wiring harness. Within the pneumatic circuit, they are located directly after the Dump Valve (DV) and the brake cylinder cutout cock.

The BCA (brake cylinder applied) is normally closed (NC) indicating friction brakes are not applied. When BCA opens (friction brakes are now applied) a signal is sent to the ECU. When a “friction brakes applied” signal is sensed on all trucks in the train, a “Brake On” indicator will illuminate.

The BCR (brake cylinder released) is normally open (NO) indicating friction brakes are not on (friction brakes are released) a signal is sent to the ECU. When a “friction brakes released” signal is sensed on all trucks in the train, a “Brakes Released” indicator will illuminate.

- BCA (MT) pressure switch closes at 57 +1 -3PSI and opens at 28 +/- 2PSI.
- BCR (MT+CT) pressure switch closes at 5 +2 - 1 PSI and opens at 3.5 +/- 1PSI.
- BCA (CT) pressure switch closes at 17 +0 -3PSI and opens at 9 +0 -3PSI.
- Electrical Connector – 3 pin (pin 1 normally closed, pin 2 common, pin 3 normally open).

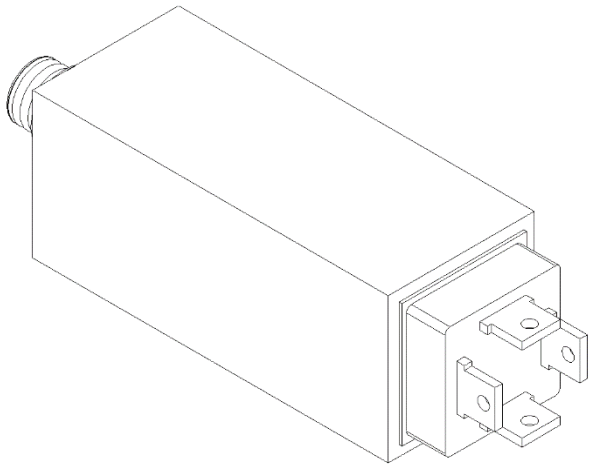

Figure 2-29: Brake Apply and Release Switch

2.1.17 Park Brake Apply and Park Brake Released (PBA, PBR)

The PBA and PBR switches, see Figure 2-29, work together to inform the ECU of the "Parking Brakes Applied" or "Parking Brake Released" condition. Both switch types have a three prong electrical connector that connects to the BCU wiring harness. Within the pneumatic circuit, they are located directly after the PBCO valve. The PBA and PBR switches are located on the MT BCU.

The PBA (park brake applied) is normally closed (NC) indicating parking brake is not applied. When PBA opens (park brake is now applied) a signal is sent to the ECU. When a "park brake applied" signal is sensed on motor trucks in the train, a "Park Brake On" indicator will illuminate.

The PBR (park brake released) is normally open (NO) indicating park brake is not on (park brakes are released) a signal is sent to the ECU. When a "park brake released" signal is sensed on motor trucks in the train, a "Park Brake Released" indicator will illuminate.

- PBA pressure switch opens at 23 ± 1 psi and closes at 20 ± 1 psi.
- PBR pressure switch opens at 72.5 ± 2.5 psi and closes at 35 ± 3 psi.
- Electrical Connector – 3 pin (pin 1 normally closed, pin 2 common, pin 3 normally open).

2.1.18 Electronic Control Unit (ECU)

2.1.18.1 Electronic Control Unit (ECU) Description

The Electronic Control Unit (ECU), see Figure 2-30 provides the overall friction braking control of the LACMTA P3010 series LRV. Knorr uses a service proven electronic hardware system called Electronic System for Railway Applications (ESRA).

The ECU interprets the MVB signal for the brake level commanded by the Master Controller or Automatic Train Control (ATC) and provides the control signals to the friction braking equipment. The CB12A board is a communication board utilizing an Ethernet protocol for vehicle monitoring and diagnostic system (VMDS).

The ECU also interfaces with the propulsion system via the dynamic braking effort achieved feedback signal. The ECU then controls the friction braking to supplement the electric braking as required to meet the overall braking demand. The ECU also provides real-time monitoring and diagnostics of the friction brake and pneumatic systems, and communicates with the Vehicle Monitoring System via the Car Communications Network. There are three ECU's per car; 1 per truck.

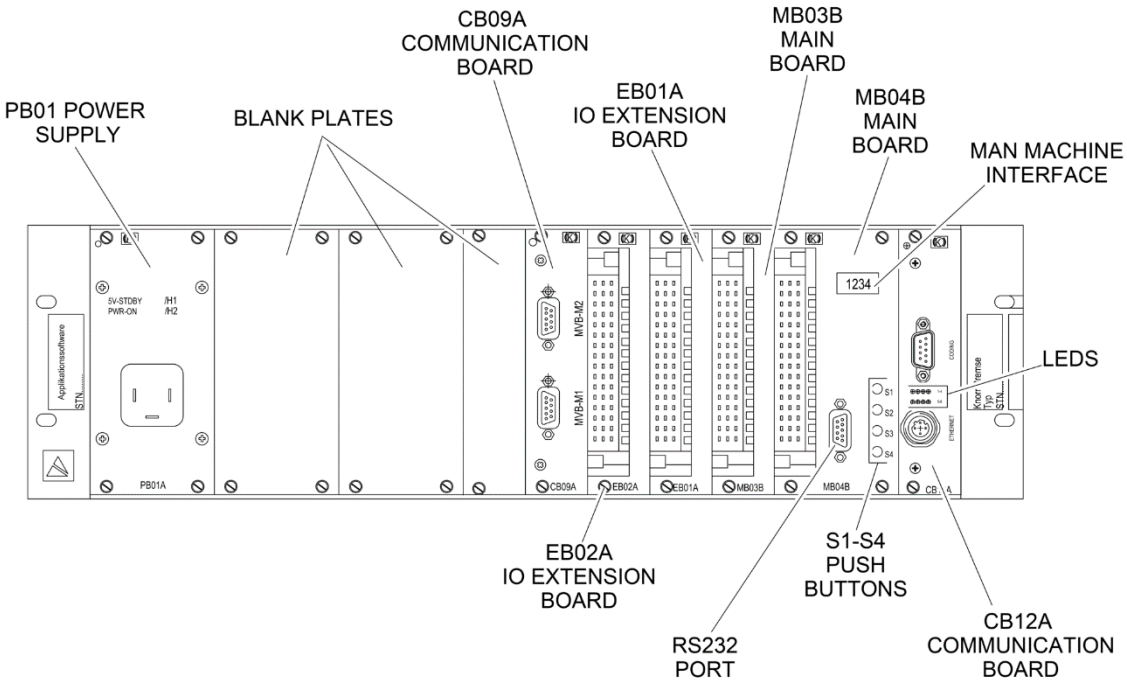

Figure 2-30: Electronic Control Unit

[redacted]

[redacted]

Table 2-3. Input Signals

Signal Name	Signal Source	Board Pins	Logical Area	Comments
Power Supply	Vehicle Battery		24 VDC ± 30%	
bo_EB	Vehicle	EB02A z22	High = 24 VDC ± 30% = No Emergency Brake Low = 0 VDC = Emergency Brake	Emergency Brake Trainline MT and CT ECU EB has been activated
bo_CM	Vehicle	EB02A z24	High = 24 VDC ± 30% = Coast/Power Low = 0 VDC = Brake	Coast/Power Trainline MT and CT ECU Master Controller in a coast or power position
bo_M	Vehicle	EB02A d24	High = 24 VDC ± 30% = Power Low = 0 VDC = Coast/Brake	Power Trainline MT and CT ECU Master Controller in a power position
bo_SCEB	Vehicle	EB02A z20	Low = 24 VDC ± 30% = Slide Cont. EB High = 0 VDC = No Slide Cont. EB	Slide Controlled Emergency Brake Trainline MT and CT ECU Slide Controlled Emergency Brake activated at Master Controller
bo_Limp_Home	Vehicle	EB02A d20	High = 24 VDC ± 30% = Limp Home Mode Low = 0 VDC = No Limp Home Mode	Limp HomeTrainline MT and CT ECU Limp Home mode has been activated
bo_TrackBrake	Vehicle	EB02A d16	High = 24 VDC ± 30% = Track Brakes Applied Low = 0 VDC = No Track Brakes	Track Brake Trainline MT and CT ECU Track Brakes commanded
bo_Location	Vehicle	EB02A z14	High = 24 VDC ± 30% = Motor Truck B Low = 0 VDC = Motor Truck A	ECU Location Signal Motor Trucks Only Indicates location of ECU
wSpeed_Axle_1	Sensor on truck	MB03B z26	New 28" wheel; 77.0708 puls/s/mph, or 5394.9571hz at 70mph 10-30 VDC, 10mA, 0-15 kHz	Frequency Signal from speed sensor MT – Signal from Axle 1 or 4 CT – Signal from Axle 2
wSpeed_Axle_2	Sensor on truck	MB03B z24	New 28" wheel; 77.0708 puls/s/mph, or 5394.9571hz at 70mph 10-30 VDC, 10mA, 0-15 kHz	Frequency Signal from speed sensor MT – Signal from Axle 2 or 5 CT – Signal from Axle 3
wSpeed_Axle_3	Sensor on truck	MB03B z22	New 28" wheel; 77.0708 puls/s/mph, or 5394.9571hz at 70mph 10-30 VDC, 10mA, 0-15 kHz	Frequency Signal from speed sensor MT – Signal from Axle 3 or 6 CT – Signal from Axle 4
wSpeed_Axle_4	Sensor on truck	MB03B z20	New 28" wheel; 77.0708 puls/s/mph, or 5394.9571hz at 70mph 10-30 VDC, 10mA, 0-15 kHz	Frequency signal from speed sensor CT Only – Signal from Axle 5

Table 2-3. Input Signals (cont'd.)

Signal Name	Signal Source	Board Pins	Logical Area	Comments
bo_PB_Rel_PS	Pressure Switch on BCU	EB02A z12	High = 24 VDC ± 30% = PB Not Released Low = 0 VDC = PB Release	PBR Pressure Switch signal Motor Truck Only PB pressure above 75PSI
bo_PB_Apply_PS	Pressure Switch on BCU	EB02A d12	High = 24 VDC ± 30% = PB Applied Low = 0 VDC = PB not Applied	PBA Pressure Switch signal Motor Truck Only PB pressure below 20 PSI
bo_Elec_Cutout	Vehicle	EB02A z18	High = 24 VDC ± 30% = Brake Cut out Low = 0 VDC = Brake Cut in	Electrical brake cutout signal MT and CT ECU Vehicle signal to activate FBCV fed back to ECU
bo_Mech_Cutout	Brake Cylinder Cutout Cock	EB02A d18	High = 24 VDC ± 30% = Brake Cut out Low = 0 VDC = Brake Cut in	Mechanical brake cutout signal MT and CT ECU Signal from switch on Brake Cylinder Cutout Cock
wMR_Press_trans	Sensor on BCU	MB04B z12	4 mA = 0 psi 20 mA=145 psi	Pressure signal from MRT Center Truck Only Current signal indicating Main Reservoir pressure
wControl_Pressure_trans	Sensor on BCU	MB04B z14	4 mA = 0 psi 20 mA=145 psi	Pressure signal from CVT MT and CT ECU Current signal indicating pressure output from DPC
wLoadWeight_trans	Sensor on BCU	MB04B z16	4 mA = 0 psi 20 mA = 145 psi	Pressure signal from LWT MT and CT ECU Current signal indicating load weight pressure
wBrake_Cyl_trans	Sensor on BCU	MB04B z18	4 mA = 0 psi 20 mA=145 psi	Pressure signal from BCT MT and CT ECU Current signal indicating bracke cylinder pressure
bo_ASU_Contactor_ Control	ASU	EB01A z26	High = 24 VDC ± 30% = ASU Running Low = 0 VDC = ASU not running	Status signal from ASU Center Truck Only Binary signal indicating that the ASU is running
bo_No_Motion	Vehicle	EB01A z24	High = 24 VDC ± 30% = No Motion Detected Low = 0 VDC = Motion Detected	Status signal from vehicle MT and CT ECU Binary signal indicating that the vehicle is in motion

Table 2-3. Input Signals (cont'd.)

Signal Name	Signal Source	Board Pins	Logical Area	Comments
U_bat	Vehicle	PB01A 1 – +Ubat 2 - -Ubat 3 – Ground	+24 VDC	
MVB-M1	Vehicle	BC09A 1 – A.DATA_P 2 – A.DATA_N 3 - BRIDGE 4 – B.DATA_P 5 – B.DATA_N 6 – A.TERM_P 7 – A.TERM_N 8 – B.TERM_P 9 – B.TERM_N	MVB	
MVB-M2	Vehicle	BC09A 1 – A.DATA_P 2 – A.DATA_N 3 - BRIDGE 4 – B.DATA_P 5 – B.DATA_N 6 – A.TERM_P 7 – A.TERM_N 8 – B.TERM_P 9 – B.TERM_N	MVB	

Table 2-4. Output Signals

Signal Name	Signal Source	Board Pins	Logical Area	Comments
wDCL_Charge	FB-ECU	MB04B d8	High = 24 VDC ± 30% = Charging Low = 0 VDC = Not Charging	Signal to AMV increase Control Volume pressure in BCU based on pressure reading from CVT. MT and CT ECU
wDCL_Vent	FB-ECU	MB04B z8	High = 24 VDC ± 30% = Venting Low = 0 VDC = No Venting	Signal to RMVs to decrease Control Volume pressure in BCU based on pressure reading from CVT. MT and CT ECU
bo_WSP_Hold	FB-ECU	MB03B d8	0 VDC = 15% = HOLD 24 VDC ± 30% = 85% = Not HOLD	Signal to dump valve to hold BC at BC pressure output from BCU. MT and CT ECU
bo_WSP_Vent	FB-ECU	MB03B z8	0 VDC = /15% = HOLD 24 VDC ± 30% = 85% = Not HOLD	Signal to dump valve to vent BC pressure output from BCU to respond to a wheel slide condition. MT and CT ECU
bo_FB_Major_Fault	FB-ECU	EB01A z14	High = 24 VDC ± 30% = No Fault Low = 0 VDC = Fault	Signal to vehicle logic that the friction brake system is in a major fault condition. MT and CT ECU
bo_Sanding	FB-ECU	EB01A z16	High = 24 VDC ± 30% = Sanding Requested Low = 0 VDC = Not Sanding Requested	Signal to sanding magnet valve to apply sand to the rail. MT and CT ECU
bo_FB_No_Motion	FB-ECU	EB01A z12	High = 24 VDC ± 30% = No Motion Detected Low = 0 VDC = Motion Detected	Motion status output MT and CT ECU Binary signal indicating that the vehicle is in motion
bo_FB_Slow_Motion	FB-ECU	EB01A z10	High = 24 VDC ± 30% = Speed has dropped below 6.5 mph Low = 0 VDC = Speed is above 6.5 mph	Slow Motion status output MT and CT ECU Binary signal indicating that the vehicle speed is slowing

The ECU is a modular system of hardware mounted in a standard, 19-inch rack arrangement that allows various control devices to be built from standard components. A brief description of each major component function is described below:

- The **Main Boards, MB03 and MB04**, see Figure 2-33 and Figure 2-34 are the main processing component within the ECU. The main boards are loaded with standard modules including brake control and wheel-slide protection as well as application specific software. The MB04 boards include a local Man-Machine Interface (MMI) card, which contains the 4-character alpha numeric display, 4 push buttons, and RS232 interface (NOTE: the ECU programing and diagnostics are performed through the Ethernet connection using ST03 maintenance software, for the P3010 cars the RS232 connection will not be used). For the LACMTA P3010 series LRV, two main boards are supplied; the first performs wheel-slide protection, the second provides brake cylinder pressure control and trainline decoding.
- The four pushbuttons on the MMI have the following functions:
  - S1
    - Pressing button S1 for one second starts the automatic retrieval of system faults. In automatic mode, the ECU displays all faults stored in the ECU non-volatile memory, 1 fault every 2 seconds. A display of "95 " indicates all current faults have been shown. Automatic display stops once all faults have been displayed.
    - Pressing button S1 for two seconds switches ECU to manual fault retrieval mode. Subsequent pressing of button S1 after entering manual mode displays each successive fault code until all have been shown.
    - Pressing and holding the S1 button for one second while in manual mode reverts the ECU back to automatic fault retrieval.
    - If no faults are present, the ECU displays "9999". Faults that have been retrieved but not cleared are shown after the "95" indication has been displayed.
  - S2
    - Pressing and holding S2 for two seconds causes the software to initiate the regulator learn function. This function is not enabled for this system.
  - S3
    - Pressing and holding S3 for two seconds causes all faults to be erased from the ECU. A "9999" on the MMI display for at least 10 seconds confirms the clearing of faults.
  - S4
    - Pressing and holding S4 for two seconds causes the current software version to be display on the MMI.

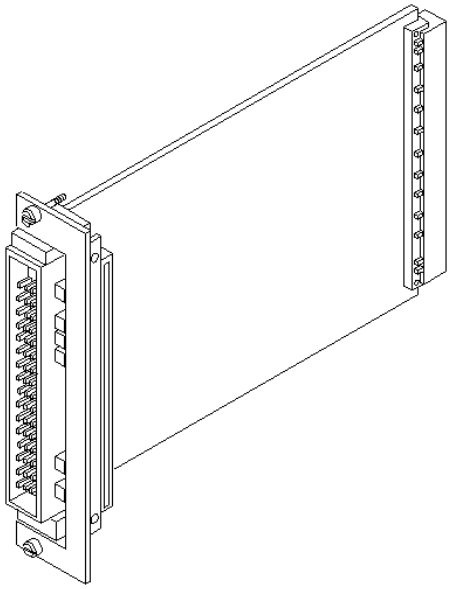

Figure 2-33: MB03B Main Board

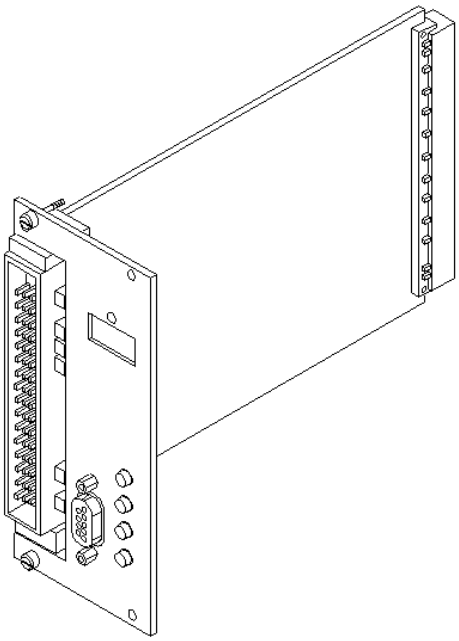

Figure 2-34: MB04 Main Board

- The **Extension Boards EB01 and EB02**, see Figure 2-35, extend the input/output capability of the main boards. They function as a slave board in the ESRA system, providing processing of inputs and outputs for the master main boards. The EB01 and EB02 extension boards are used to process digital inputs and outputs.

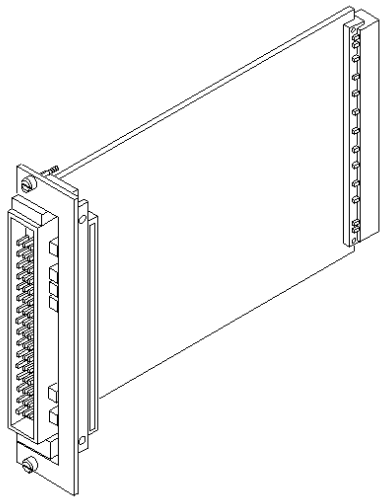

Figure 2-35: EB01 and EB02 Extension Boards

- The **Power Board PB01**, see Figure 2-36, provides power to all the boards within the ECU, speed sensors, pressure transducers, the anti-skid valve, and the analog converter within the pneumatic system. The power supply output is maintained for any input voltage between 16.8 VDC and 46.8 VDC.

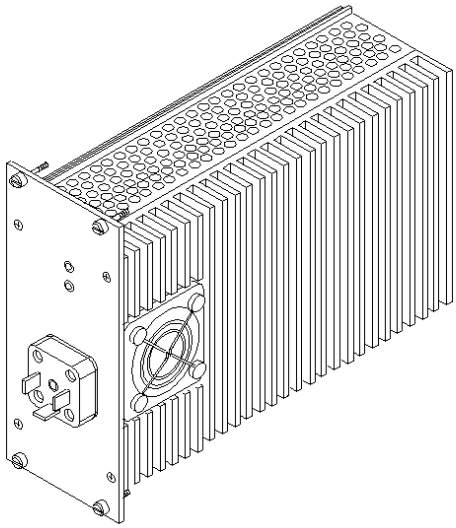

Figure 2-36: PB01 Power Board

- The **Communications Board, CB09C**, see Figure 2-37, provides a link between the ECU and the Vehicle Monitoring System (VMS) using the MVB protocol. This board uses its own processor and application code in order to assure communication without loss of brake system processing power.

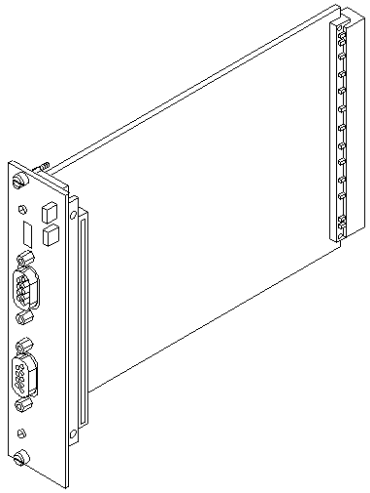

Figure 2-37: CB09C Communications Board

- The **Communications Board CB12A**, provides a link to the car based Ethernet network for high bandwidth data queries and firmware updates. This board uses its own processor and application code in order to assure communication without loss of brake system processing power. The CB12 also provides local ECU data logging capabilities for brake and ECU status as part of the brake failure monitor functionality. This includes the ability to log data to 1, 2, 8, 24, and 48-hour files when braking and propulsion systems are actively placed in an operating state.
- The backplane connects the various system boards together within the electronic control panel.

2.1.18.2 Service Terminal

Service Terminal offers the user a wide variety of PC-based diagnostics and test capabilities. It gives access to the functions of all ESRA boards, such as those for installing the application software. The service terminal features a user-friendly graphical interface. The man-machine interface can communicate with the service terminal though the RS232 system interface. Refer to the Service Terminal ST03A User's Manual of the Tools and Test Equipment Manual for detailed instructions on use of the Service Terminal.

2.1.18.2.1 Connecting Service Terminal

1. Connect an RS232 cable between the service terminal and the MB04B board in the ECU.

2. Apply power to the service terminal laptop computer.

3. Start the service terminal application on the laptop.

4. When the service terminal application is started, the opening screen appears. The project name as well as the current service terminal name and revision appears in the window title bar. The connection type and signal integrity appear at the bottom of the screen.

5. Open the project file through the File>Open menu.

NOTE: The Service menu allows the technician to display fault events in ECU memory, monitor input signals to the ECU, change output signals to exercise system components, as well as display information on the friction brake parameters. Refer to service terminal manual for more information on service terminal operation.

6. Open Service menu to perform maintenance and troubleshooting actions.

2.1.19 Brake Calipers Service Brake and Parking Brake

Each car has four motor truck and four center WZKK calipers, see Figure 2-38, for a total of eight calipers per car, which serve as friction brakes when used in conjunction with the axle-mounted brake discs. All calipers service brake cylinders are active, meaning they are air-applied and spring-released for service and emergency braking. The motor truck calipers have a passive parking brake function, which is spring-applied and air-released. The calipers have automatic slack adjustment provided by a single-acting slack adjuster, which activates on every brake application to adjust for brake pad wear. Air pressure from the BCU's RV and Dump Valve directly control the active brake caliper portion through the Brake Cylinder port.

The Parking Brake Magnet Valve (PBMV) directly controls the release of the passive Parking brakes by connecting the Parking Brake Release port to MR pressure. In the case that no air pressure is available after parking brake application, each passive caliper has a remote caliper release control cable. There are four T-handles per truck (2 per axle). When either of the T-handles for a given axle is pulled (a minimum of 20 mm with 25–51 pounds of force) the passive Parking brake caliper on the associated axle is released. The passive-only and active/passive brake calipers can be differentiated by the large spring pack on the exterior of the active/passive calipers.

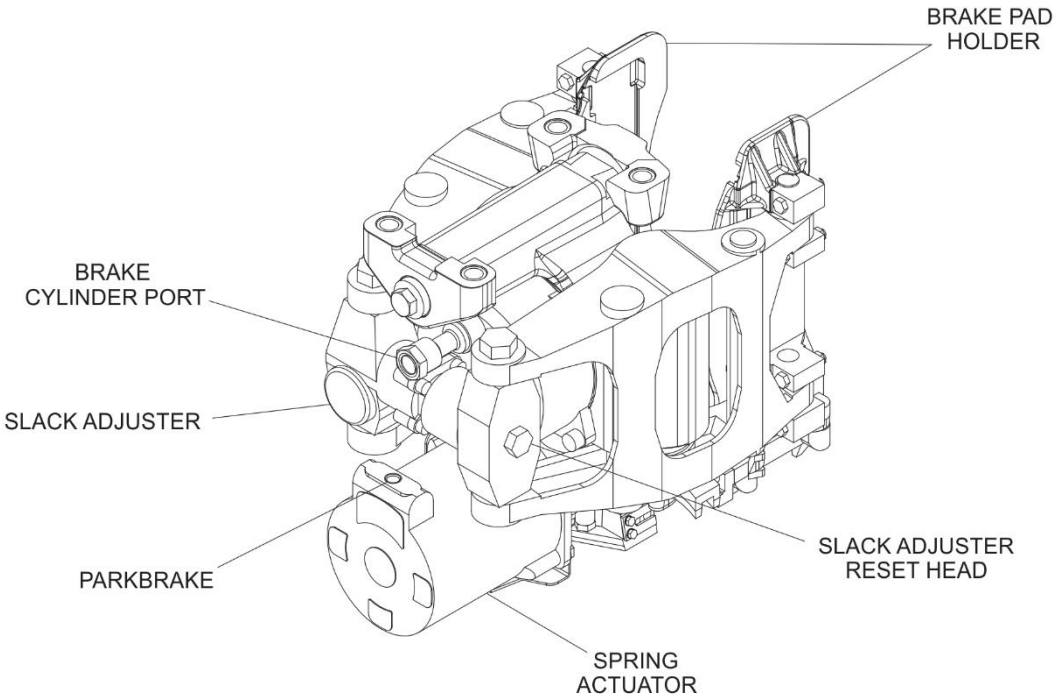

Figure 2-38: Brake Calipers

2.1.20 Brake Disc

The brake disc, see Figure 2-39, consists of a split 520 x 110 mm gray cast iron friction ring bolted to a steel hub via a 12 bolt plan seat interface. This plan seat interface, with a specific bolt torque, allows for free thermal expansion of the friction ring resulting from braking. The steel hub is pressed onto the axle.

The axle-mounted brake discs have a groove around their circumference to show when they reach their condemning limit and have to be exchanged.

The axle-mounted brake disc consists of the friction ring (a) with integral cooling ribs and the hub (c). The thickness of the friction ring and the size of the cooling ribs are rated to prevent overheating during brake application.

The friction rings are designed additionally with a view to minimizing their overall weight.

The crosswise cooling ribs carry off the heat and serve simultaneously to maintain the thermal balance within the friction rings.

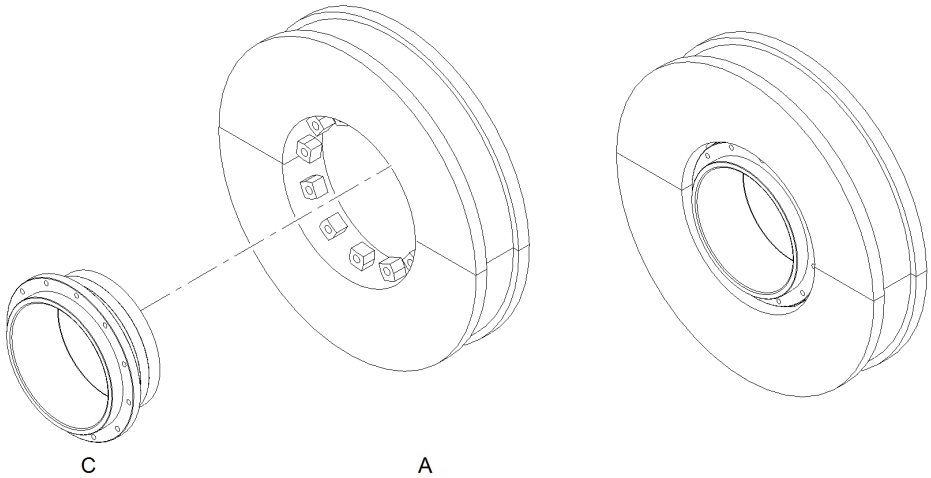

Figure 2-39: Axle Mounted Brake Disc

The crosswise-fanned, round ribs in the friction ring cooling duct have lesser air throughput than conventional radial blades and therefore need less driving power at the fan and shaft.

Heat transfer is improved as well, i.e. there is a greater temperature difference between the air inlet and outlet.

2.1.21 Brake Pad

The Brake Pads, see Figure 2-40, are 350 cm2 UIC style pads. The material is non-asbestos friction pad developed for passenger railway disc brakes. Two brake pads are mounted to each brake caliper. The calipers apply braking force to the axle mounted brake discs via the brake pads. The replacement of the brake pads is accomplished without the need for special tools. The brake caliper linkage arm can be retracted and the brake pads removed and replaced with common hand tools. Replacement of brake pads should happen on a regular interval, refer to Section 3.2 Scheduled Maintenance Index of this manual section.

2.1.22 Reservoirs

Each car has two main reservoirs (115 L), see Figure 2-10 and Figure 2-41, they provide air for the friction brake system, sanding, and leveling valve system. The size of the main reservoir has to be considered for the duty cycle of compressor and to compensate high air consumption in a peak situation (e.g. load change).

There are three supply reservoirs (48.5 L), see Figure 2-10 and Figure 2-41. One is located at the B-End BCU and motor truck, one located at BCU and center truck, and one located at A-End BCU and motor truck. They serve to provide five maximum brake applications (apply and release). The system pressure for the friction brake system is 130 psi (9.0 bar) – 150 psi (10 bar) independent of other systems. The maximum required brake cylinder pressure and volume (pipe and brake cylinders) is the criteria for the size of this reservoir.

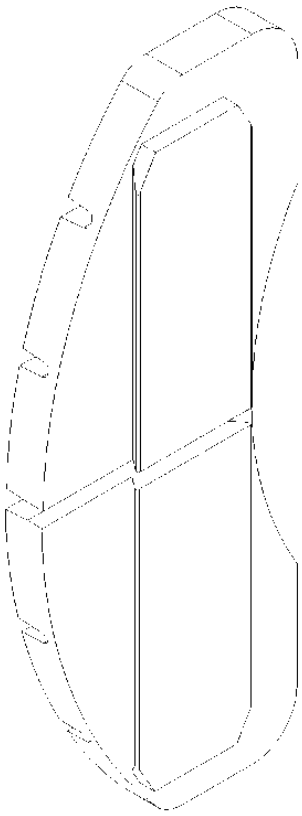

Figure 2-40: Brake Pad

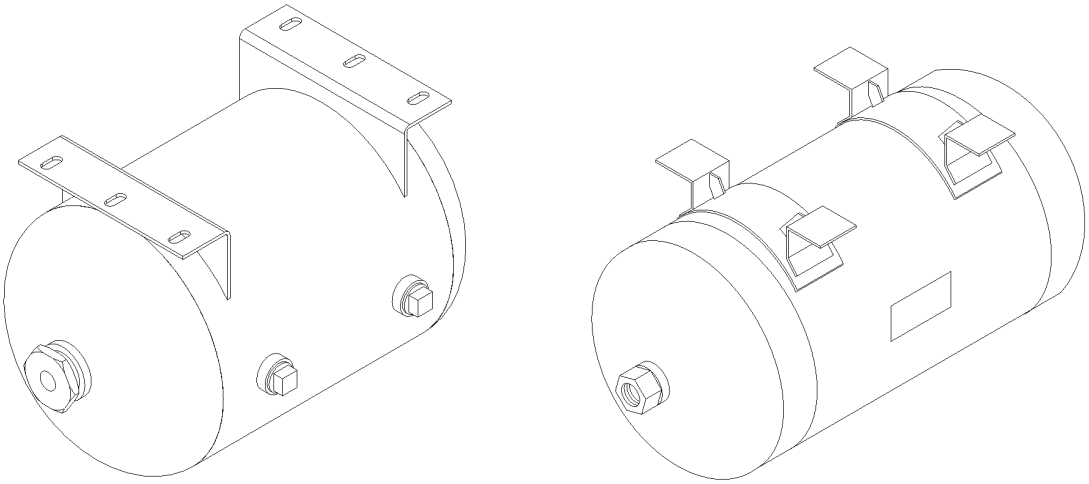

Figure 2-41: Air Reservoirs

2.1.23 Dump Valve (DV)

The Dump Valve, see Figure 2-5 and Figure 2-42, serves as an actuator in the wheel slide control system, and is driven by the electronic control unit.

The Dump Valve modules are provided to allow the wheelslide protection system to pulse control (release/apply/hold) the brakes during sliding. The valves are directly operated by the computer controlled wheel-slide system to manipulate the brake cylinder pressure until adhesion is restored between the wheel and rail.

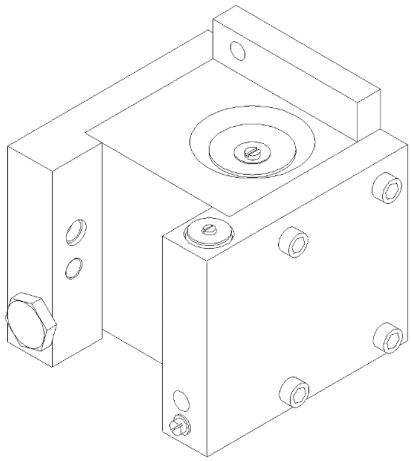

Figure 2-42: Dump Valve

See Figure 2-43 through Figure 2-47 for the following:

- Brakes released
  - With brakes released the valve is unloaded and both valve magnets (VM1) and (VM2) are deenergized. The compression spring (5) holds the diaphragm (MD) on the valve seat (VD).
- Brakes applied no wheel slide protection
  - With brakes applied the (D) pressure acts on the (MD) diaphragm. The (D) pressure pushes this diaphragm to the right end position because the control chamber (SD) is still unloaded. The valve seat (VD) is open.
  - The control chamber (SC) is charged by (D) pressure through the open inner valve seat (V2) of the valve magnet (VM1). The (D) pressure relative to the area of the valve seat (VC) exerts a closing force on the C-diaphragm (MC). The valve seat (VC) is closed. The path from (D) to (C) is open. The vehicle brakes can be freely applied in this condition.
- Brakes release with no wheel slide protection
  - When the (D) pressure goes low, the (MD) diaphragm closes as the force of the compression spring (5) becomes higher than the (D) pressure (relative to the effective diaphragm area).
  - The (C) pressure is then discharged entirely through the (VC) valve seat and exhaust bore (O) as the (D) pressure continues to drop.

- Service braking with active wheel slide protection (release)
  - (D) pressure is at service brake pressure.
  - Both valve magnets (VM1) and (VM2) are energized.
  - The control chamber (SD) is charged by (D) pressure through valve magnet (VM2). The pressures are balanced across the D-diaphragm (MD); the compression spring (5) pushes the diaphragm onto the valve seat (VD). The (D) pressure is isolated from (C) pressure.
  - The control chamber (SC) is vented through valve seat (V1) of valve magnet (VM1). The (C) pressure pushes the C-diaphragm (MC) to the left. The valve seat (VC) opens and the (C) pressure escapes through (VC) to (O).
- Re-braking with wheel slide protection
  - (D) pressure is at service brake pressure.
  - Neither of the two valve magnets (VM1) and (VM2) is energized.
  - The control chamber (SD) is vented through magnet valve (VM2) and control chamber (SC) is charged through magnet valve (VM1). The (D) pressure acts on the D-diaphragm (MD). The D-diaphragm (MD) is pushed to the right end position against the compression spring (5). The valve seat (VD) opens.
  - The control chamber (SC) is charged by (D) pressure through the open inner valve seat (V2) of the valve magnet (VM1). The (D) pressure, relative to the area of the valve seat (VC), exerts a closing force on the C-diaphragm (MC). The valve seat (VC) is closed. The passage from (D) to (C) is open. The vehicle brakes can be freely applied in this condition.
- Holding pressure at a constant level with wheel slide protection
  - Valve magnet (VM1) is not energized, valve magnet (VM2) is energized.
  - The control chamber (SD) is charged by (D) pressure through valve magnet (VM2). The pressures are balanced across the D-diaphragm (MD); the compression spring (5) pushes the diaphragm onto the valve seat (VD). The (D) pressure is isolated from (C) pressure.
  - The control chamber (SC) is charged by (D) pressure through the open inner valve seat (V2) of the valve magnet (VM1). The (D) pressure, relative to the area of the valve seat (VC), exerts a closing force on the C-diaphragm (MC). The valve seat (VC) is closed. The (C) pressure is isolated from exhaust (O).
- The valve magnets (VM1) and (VM2) can be suitably driven to generate steps of steady pressure during both the venting phase and the charging phase.
- Building up and discharging pressure can therefore be made to respond quickly (without pressure steps) or slowly (step by step) according to the needs of the wheel slide control logic.

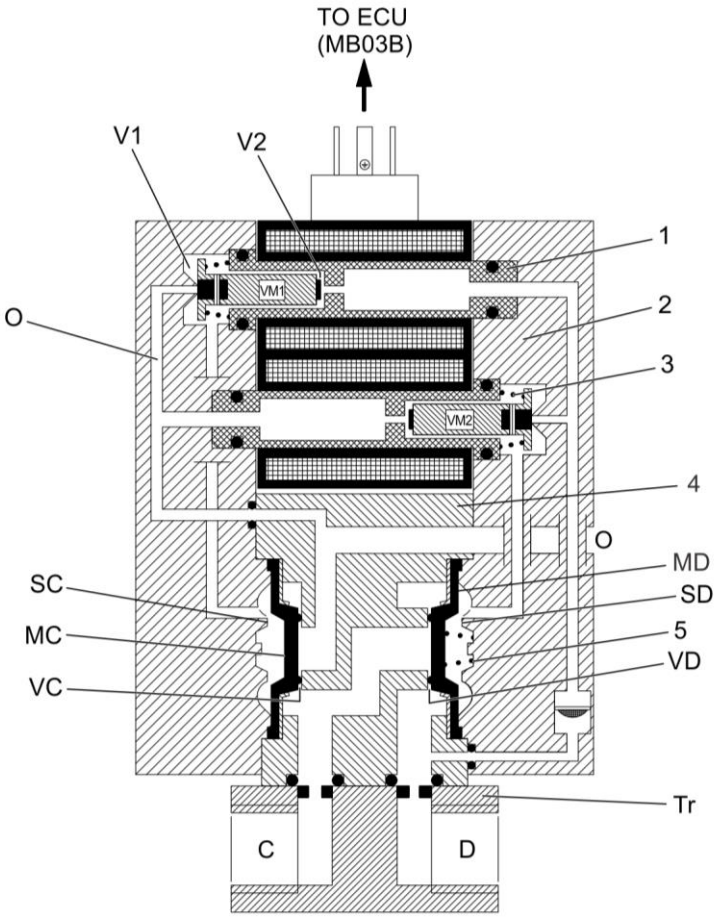

1	Twin valve magnet (VM1 and VM2)	SC	Control chamber
2	Side plate	SD	Control chamber
3	Armature spring	Tr	Valve bracket
4	Housing	V1	Outer valve seat
5	Compression spring	V2	Inner valve seat
C	Port, brake cylinder	VC	Valve seat
D	Port, input pressure	VD	Valve seat
MC	C-diaphragm	VM1	Valve magnet
MD	D-diaphragm	VM2	Valve magnet
O	Exhaust bore		

Figure 2-43: Dump Valve Schematic – Brakes Released

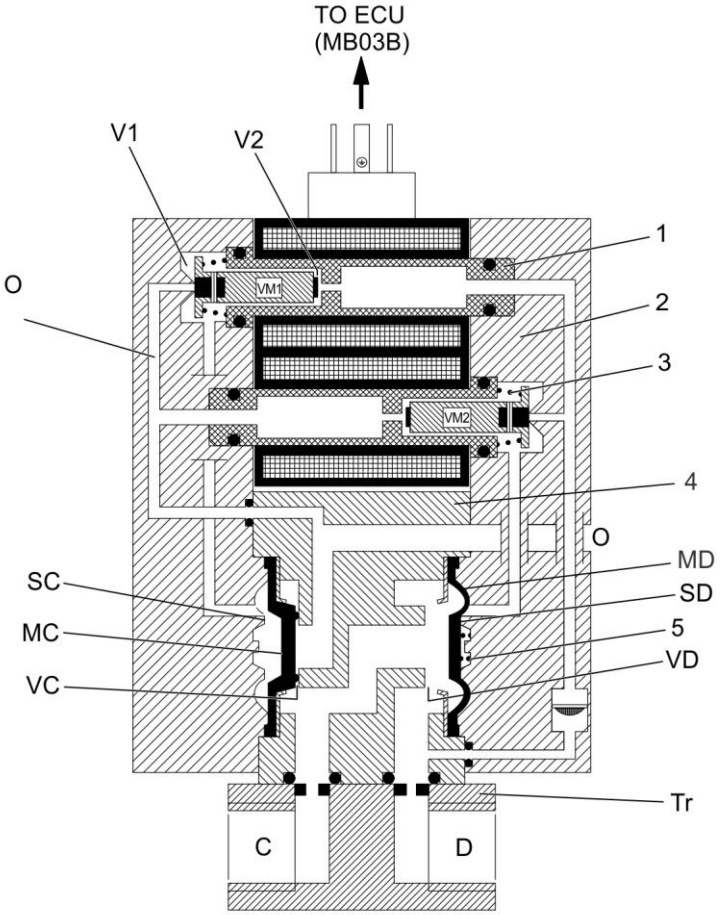

1	Twin valve magnet (VM1 and VM2)	SC	Control chamber
2	Side plate	SD	Control chamber
3	Armature spring	Tr	Valve bracket
4	Housing	V1	Outer valve seat
5	Compression spring	V2	Inner valve seat
C	Port, brake cylinder	VC	Valve seat
D	Port, input pressure	VD	Valve seat
MC	C-diaphragm	VM1	Valve magnet
MD	D-diaphragm	VM2	Valve magnet
O	Exhaust bore		

`

Figure 2-44: Dump Valve Schematic – Brakes Applied without WSP

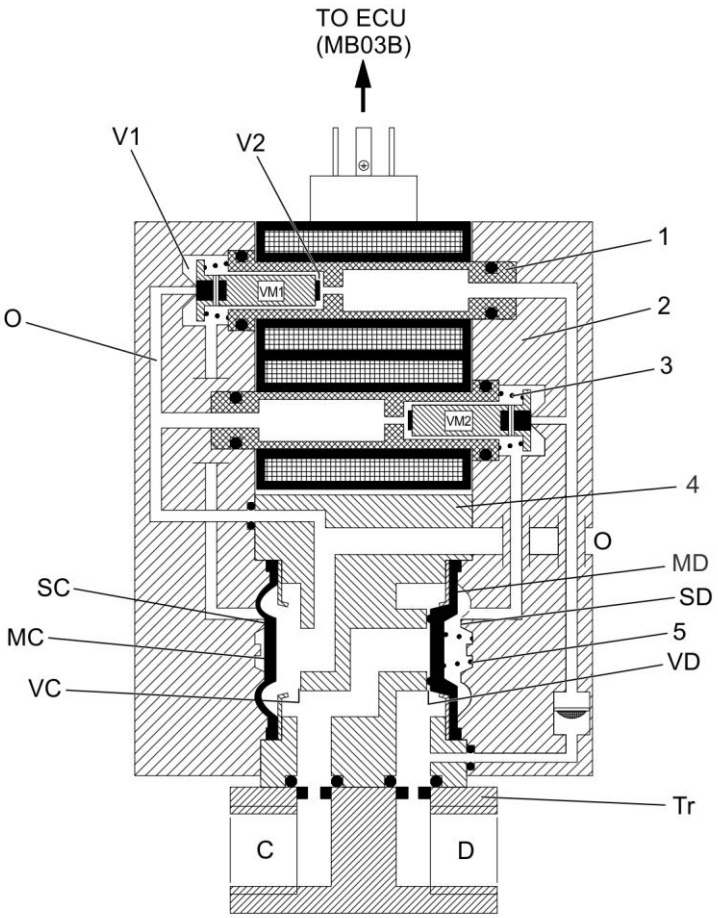

1	Twin valve magnet (VM1 and VM2)	SC	Control chamber
2	Side plate	SD	Control chamber
3	Armature spring	Tr	Valve bracket
4	Housing	V1	Outer valve seat
5	Compression spring	V2	Inner valve seat
C	Port, brake cylinder	VC	Valve seat
D	Port, input pressure	VD	Valve seat
MC	C-diaphragm	VM1	Valve magnet
MD	D-diaphragm	VM2	Valve magnet
O	Exhaust bore		

Figure 2-45: Dump Valve Schematic – Brakes Released without WSP

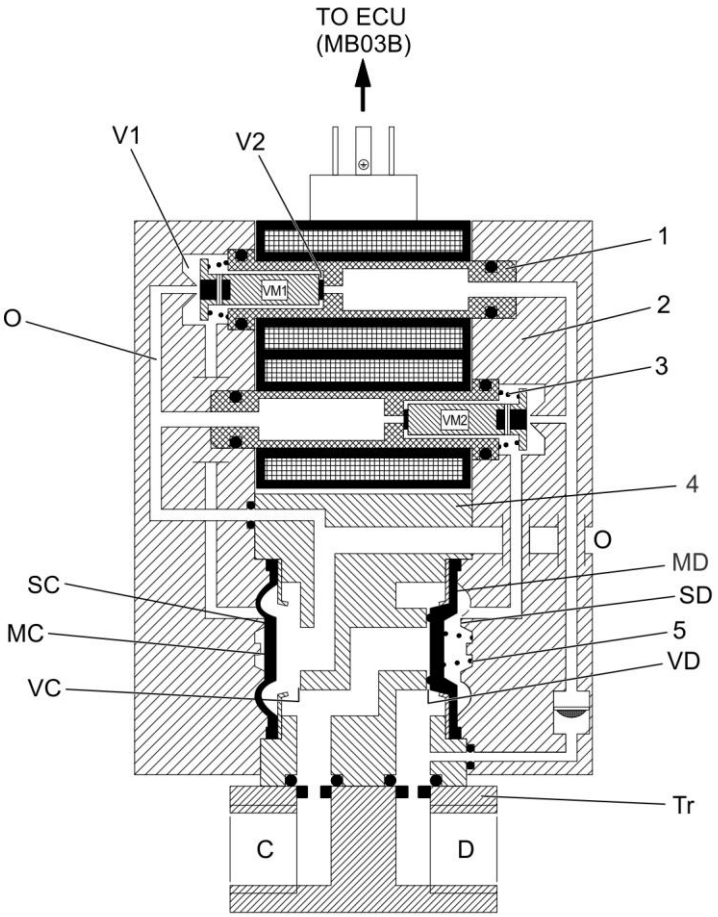

1	Twin valve magnet (VM1 and VM2)	SC	Control chamber
2	Side plate	SD	Control chamber
3	Armature spring	Tr	Valve bracket
4	Housing	V1	Outer valve seat
5	Compression spring	V2	Inner valve seat
C	Port, brake cylinder	VC	Valve seat
D	Port, input pressure	VD	Valve seat
MC	C-diaphragm	VM1	Valve magnet
MD	D-diaphragm	VM2	Valve magnet
O	Exhaust bore		

Figure 2-46: Dump Valve Schematic – Brakes Applied with WSP

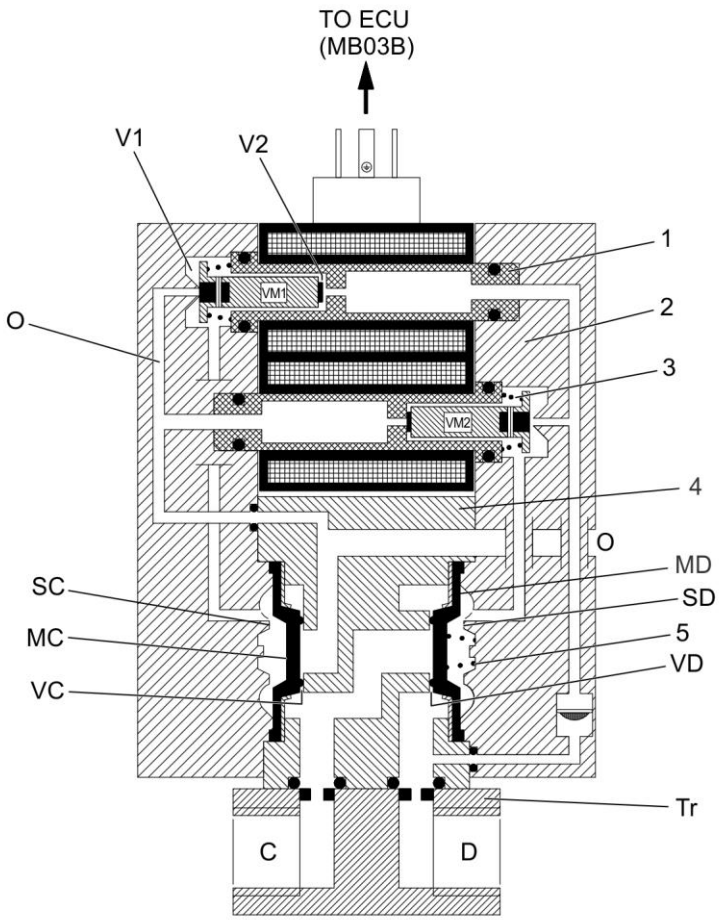

1	Twin valve magnet (VM1 and VM2)	SC	Control chamber
2	Side plate	SD	Control chamber
3	Armature spring	Tr	Valve bracket
4	Housing	V1	Outer valve seat
5	Compression spring	V2	Inner valve seat
C	Port, brake cylinder	VC	Valve seat
D	Port, input pressure	VD	Valve seat
MC	C-diaphragm	VM1	Valve magnet
MD	D-diaphragm	VM2	Valve magnet
O	Exhaust bore		

Figure 2-47: Dump Valve Schematic – Brakes Applied While Holding in WSP

2.1.24 Sanding Equipment

The purpose of the sanding system is to increase wheel to rail adhesion by distributing sand on the rail ahead of the vehicle's lead axle as selected by reverser position. Sand may be requested by the Friction Brake motor truck and center truck ECU's, by the operator via the sanding pushbutton on the control console or by the Propulsion System via MVB. The vehicle control system is responsible for closing the sanding relay which opens the sanding magnet valve see Figure 2-48 and TA37044/611.2, Section 3.2.1.2. Refer to Section 0200, Car Body of the Running Maintenance and Servicing Manual for information on the sanding device.

The sanding system takes its air supply from the main reservoir line. The air supply passes through the cut-out cock, which is used to isolate the sanding magnet valve. The activation of the sanding magnet valve must be keyed to the vehicle directional controls. This is necessary to ensure that sand is only distributed in front of the leading axle on the vehicle. Each sanding magnet valve provides compressed air for two sand ejectors. The sand ejectors are mounted underneath the vehicle sand boxes. No sanding is provided on the vehicle's Center Truck.

Figure 2-48: Sanding System Schematic

Table 2-5. Sanding System Component Identification

Item Number	Description
F1.1	Vented Cutout Cock
F1.2	Sanding Supply Air Feed Valve, Magnet Valve
F2	Sand Ejectors

2.1.25 Speed Sensors

Dual channel speed sensors generate a variable frequency signal based upon the number of axle rotations per minute. The active speed sensor permits diagnostics of the unit without the vehicle being in motion and more reliable operation at very low vehicle speeds. Multiple individual axle speeds, from the independent sensor channels, are provided for each truck's wheel slide control function. Having multiple sensors improves the reliability of the wheel slide protection and permits a more accurate calculation of the reference speed. The speed signal processing also provides a zero-speed indication for use in the friction brake control.

There is a total of ten dual channel speed sensors used on the vehicle. There are two speed sensors on both motor truck axles 1 and 6. There are two speed sensors each on both center truck axles 3 and 5. There is one speed sensor on both motor truck axles 2 and 4. See Figure 2-49.

The specifications are as follows:

Type of output signal:	digital
Nominal supply voltage:	10 ... 30 VDC
Nominal supply current:	≤ 30 mA
Output current:	≤ 20 mA
Output frequency:	0…15 kHz
High level: VCC	(VCC – 3V)
Low level:	0…2 V
Temperature range:	-40°C … +80°C (-140⌗F … 176⌗F)

For this application the pin out is as follows:

A- +VDC1

B- Channel 1 H output

C- Channel 1 L output

D- GND1

E- +VDC2

F- Channel 2 H output

G- Channel 2 L output

H- GND2

The gear ratio is 1:6.42 and there are 60 teeth on the PT pole wheel. For a new 28 inch wheel, this translates to 77.0708 pulses/sec per mph, or 5394.9571 hz at 70 mph. For a worn 26 inch wheel this translates to 82.999 pulses/sec per mph, or 5809.96 hz at 70 mph.

CT pole wheel has 120 teeth. For a new 28 inch wheel this translates to 24.0095 pulses/sec per mph, or 1680.6711 hz at 70 mph. For a worn 26 inch wheel this translates to 25.8564 pulses/sec per mph, or 1809.9538 hz at 70 mph.

Additionally each individual axle speed is available on the MVB for each axle. These signals originate from the friction brake ECUs.

THIS PAGE INTENTIONALLY LEFT BLANK

[redacted]

Figure 2-49: Speed Sensors

CHAPTER 3.0

SCHEDULED MAINTENANCE TASKS

3.1 Introduction

This chapter provides inspection and servicing procedures and schedules required to maintain the friction brake system components. Inspection and service procedures range from 10,000 miles to 600,000 miles and are performed at scheduled intervals from daily to yearly.

Table 3-1 identifies the maintenance task to be performed and the related LRU. When the recommended frequency maintenance is performed refer to the maintenance procedure found in this document for more information.

3.2 Scheduled Maintenance Index

Table 3-1. Scheduled Maintenance Index

Maintenance Interval	Part Description	Scheduled Maintenance Task	Section 1300, Friction Brakes Running Maintenance Manual Section Reference
Daily	ASU Compressor	Compressor warm-up (90 min.)	5.1.12
After 4 months of operation	ASU Compressor	Replace ASU compressor break-in oil with specified running oil	6.3.2
Every 100 compressor operating hours or monthly	ASU Compressor	Inspect ASU compressor oil level	5.1.1
10,000	ASU Vacuum Indicator	Inspect ASU vacuum indicator, ASU	5.1.2
10,000	ECU	Inspect ECU	5.1.5
30,000	ASU Hoses	Inspect ASU hoses	5.1.6
30,000	Brake Caliper	Inspect brake caliper	5.1.8
30,000	Brake Pads	Inspect brake pads	5.1.9
60,000	ASU Main Reservoir	Inspect ASU main reservoir	5.1.3
60,000	Brake Reservoir	Inspect brake reservoir	5.1.4
60,000	ASU Intake Air Filter	Replace intake air filters, ASU	6.3.1
60,000	ASU Compressor	Replace ASU compressor oil	6.3.2
100,000	Air Suspension Filter	Replace Air Suspension Filter	6.3.12

Table 3-1. Scheduled Maintenance Index (cont'd.)

Maintenance Interval	Part Description	Scheduled Maintenance Task	Section 1300, Friction Brakes Running Maintenance Manual Section Reference
120,000 or as required	Center Truck Brake Pad	Replace center truck brake pads	6.3.3
120,000	Brake Disc	Inspect brake disc	5.1.7
120,000	BCU Air Filter	Replace BCU air filters	6.3.4
120,000	ASU Desiccant Canister	Replace ASU desiccant canisters	6.3.5
120,000	ASU Cooler	Drain ASU cooler	6.3.6
120,000	Apply and Release BCU Magnet Valves	Inspect apply and release BCU magnet valves	5.1.10
120,000	Parking Brake Cutout Valve	Inspect parking brake cutout valve	5.1.11
600,000	Motor Truck BCU Pressure Transducers	Replace motor truck BCU pressure transducers (BCT, CVT, LWT)	6.3.7
600,000	Center Truck BCU Pressure Transducers	Replace center truck BCU pressure transducers (BCT, CVT, LWT, MRT)	6.3.8
600,000	Disc Brake	Replace disc brake	6.3.9
600,000	MT BCU Pressure Switches	Replace MT BCU pressure switches (PBA, PBR, BCA, BCR)	6.3.10
600,000	CT BCU Pressure Switches	Replace CT BCU pressure switches (BCR and BCA).	6.3.11
600,000	BCU Center Truck	Overhaul Brake Control Unit Center Truck	HRM
600,000	BCU Motor Truck	Overhaul Brake Control Unit Motor Truck	HRM
600,000	Air Supply Unit	Overhaul VV-120 Air Supply Unit	HRM
600,000	Air Supply Unit Starter Box	Overhaul VV-120 Air Supply Unit Starter Box	HRM
600,000	Air Supply Unit Motor Compressor Assembly	Overhaul VV-120 Air Supply Unit Motor Compressor Assembly	HRM
600,000	Air Dryer	Overhaul LTZ-015 Air Dryer Assembly	HRM
600,000	Air Dryer Pressure Gauge	Overhaul Air Dryer Pressure Gauge	HRM
600,000	Air Supply Unit Compressor	Overhaul VV-120 Air Supply Unit Compressor	HRM

Table 3-1. Scheduled Maintenance Index (cont'd.)

Maintenance Interval	Part Description	Scheduled Maintenance Task	Section 1300, Friction Brakes Running Maintenance Manual Section Reference
600,000	Air Supply Unit Compressor Motor	Overhaul Air Supply Unit Compressor Motor	HRM
600,000	Air Supply Unit Filter Element	Replace Filter Element	HRM
600,000	Check Valve	Overhaul Check Valve (CV)	HRM
600,000	Air Filter	Overhaul Air Filter (FTL, PBFLT)	HRM
600,000	Parking Brake Cutout Cock	Overhaul Parking Brake Cutout Cock (PBCO)	HRM
600,000	Relay Valve	Overhaul Relay Valve (RV)	HRM
600,000	Pressure Limiting Valve	Overhaul Pressure Limiting Valve (LLV)	HRM
600,000	Dump Valve	Overhaul Dump Valve (DV)	HRM
600,000	Magnet Valves	Overhaul Magnet Valves (EMV, FBCV, PBMV)	HRM
600,000	Cutout Valve	Overhaul Cutout Valve	HRM
600,000	Parking Brake Disc Brake Unit	Overhaul Parking Brake Disc Brake Unit	HRM
600,000	Service Brake Caliper	Overhaul Service Brake Caliper	HRM
600,000	Sanding Magnet Valve	Overhaul Sanding Magnet Valve	HRM
--	Park Brake Bowden Cable	Park Brake Bowden cables do not need maintenance.	2.1.3

THIS PAGE INTENTIONALLY LEFT BLANK

CHAPTER 4.0

SPECIAL TOOLS AND MATERIALS

Table 4-1. Special Tools

Description	Scope of Supply	Usage	Application
Container for draining water	Customer	Recommended	Draining ASU Cooler
Vernier Caliper	Customer	Required	Measuring parts
Vernier Caliper	Customer	Required	Measuring parts
Small and large Nylon bristle brushes	Customer	Recommended	Cleaning parts
Strap wrench	Customer	Required	Removing desiccant canisters
Support device	Customer	Required	Supporting heavy parts
Torque wrench, 22 in-lbs	Customer	Required	Torquing attaching hardware
Torque wrench, 6.3 ft-lbs	Customer	Required	Torquing attaching hardware
Torque wrench, 14.8 ft-lbs	Customer	Required	Torquing attaching hardware
Torque wrench, 17 ft-lbs	Customer	Required	Torquing attaching hardware
Torque wrench, 18-52 ft-lbs	Customer	Required	Torquing attaching hardware
Torque wrench, 26 ft-lbs	Customer	Required	Torquing attaching hardware
Torque wrench, 30 ft-lbs	Customer	Required	Torquing attaching hardware
Torque wrench, 30.2 ft-lbs	Customer	Required	Torquing attaching hardware
Torque wrench, 52.4 ft-lbs	Customer	Required	Torquing attaching hardware
Torque wrench, 59 ft-lbs	Customer	Required	Torquing attaching hardware
Torque wrench, 81 ft-lbs	Customer	Required	Torquing attaching hardware
Torque wrench, 124 ft-lbs	Customer	Required	Torquing attaching hardware
Torque wrench, 200 ft-lbs	Customer	Required	Torquing attaching hardware
Torque wrench, 406 ft-lbs	Customer	Required	Torquing attaching hardware

Table 4-2. List of Materials

Description	Knorr Part Number	Application	Supplier
Anti-Seize Compound	W105374	Thread treatment	Local purchase
Hydraulic fluid HLPD 32		Thread treatment	Local purchase
Loctite 569		Thread treatment	Local purchase
Molykote D 321 R		Bare metal treatment	Local purchase
Renolit HLT2-KB grease		Greasing parts	Renolit
Solvent		Cleaning parts	Local purchase
Motor Oil Castrol HD-30	2275154	Compressor Oil	Local purchase
Torque Stripe		Marking fasteners	Local purchase
Leak Detector		Checking for air leaks	Local purchase

CHAPTER 5.0

SCHEDULED / PREVENTIVE MAINTENANCE PROCEDURES

5.1 Preventive Maintenance Procedures

5.1.1 Inspect ASU Compressor Oil Level

Equipment Conditions:

- Wheels chocked
- Parking Brakes applied
- Turn off power to 208 Vac Air Supply Unit at circuit breaker

Tools and Materials Needed:

- Socket wrench
- Torque wrench, 81 ft-lbs
- O-ring, p/n 453868
- Motor Oil, Castrol HD-30, p/n 2275154

CAUTION

THE OIL GRADE MUST AGREE WITH THE OIL LABEL. NEVER MIX DIFFERENT TYPES OF OIL. USE OF UNACCEPTABLE MATERIALS CAN RESULT IN DAMAGE TO EQUIPMENT, AND POSSIBLE FAILURE.

CAUTION

OBSERVE ALL APPLICABLE LACMTA GUIDELINES FOR PROPER DISPOSAL OF USE OIL.

1. Check oil level sight glass, see Figure 5-1 and verify that the oil level is between the min and max level marks, topping up oil as required.

CAUTION

TO PREVENT DIRT AND DEBRIS FROM FALLING INTO THE CRANKCASE, WIPE THE AREA AROUND THE CAP WITH A CLEAN CLOTH BEFORE REMOVING THE SCREW PLUG.

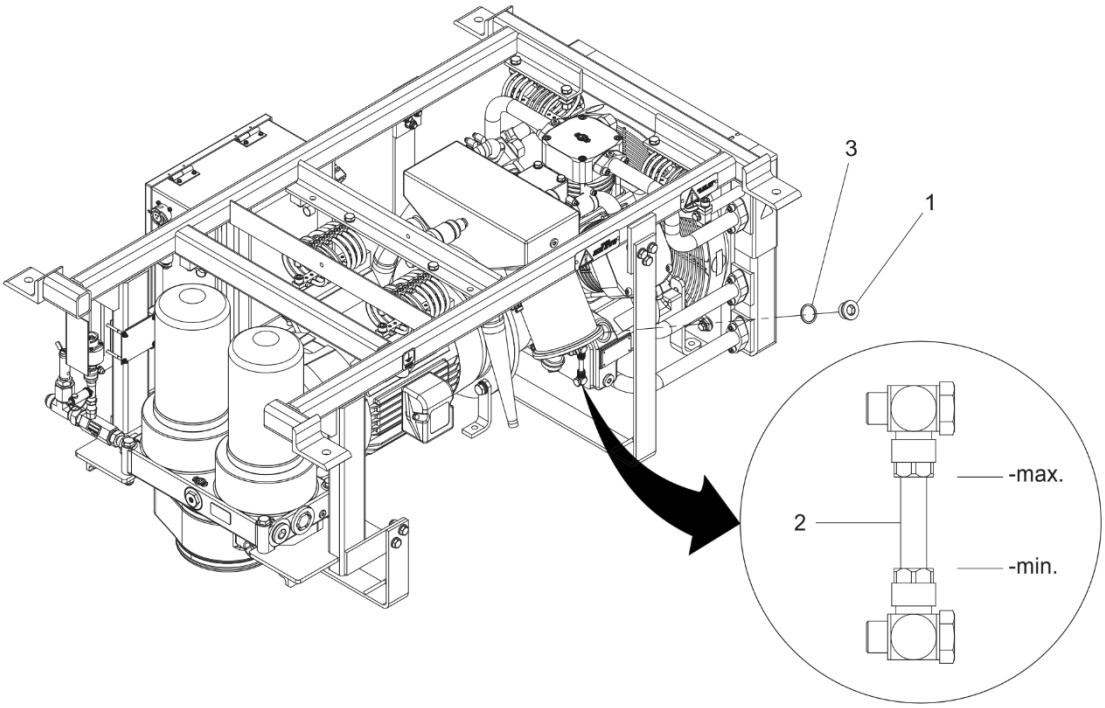

Figure 5-1: Oil Level Sight Glass

2. If oil level is below the min level line, remove screw plug (1) from oil filler hole on top of crankcase, and add oil in oil filler hole until oil reaches MAX level line of sight glass (2).

3. Install plug (1) with O-ring (3) in crankcase and torque plug to 81 ft-lbs.

NOTE: Refer to Section 6.3.2 of this manual section to Replace ASU Compressor Oil.

5.1.2 Inspect Air Filter Condition, ASU

Equipment Conditions:

- Wheels chocked
- Parking Brakes applied
- Turn off power to 208 Vac Air Supply Unit at circuit breaker

1. Visually inspect the vacuum indicator, (1) located on ASU Air Filter Assembly (2), see Figure 5-2. If indicator body shows orange, immediately replace both air filter elements refer to Section 6.3 of this manual section to Replace Intake Air Filters, ASU.

NOTE: Reset button is only to be used immediately following an air filter element replacement. Prematurely resetting vacuum indicator will not extend air filter element lifespan if orange indicator has been tripped.

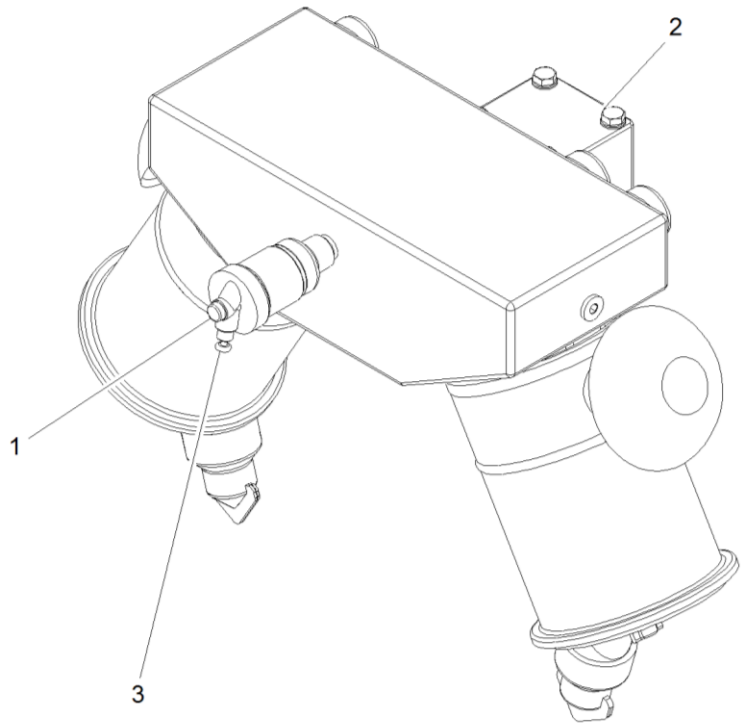

Figure 5-2: Vacuum Indicator

2. Following a filter element replacement, press reset button (3) located on vacuum indicator (1).

3. If vacuum indicator (1) is not tripped (no orange), no action is necessary.

5.1.3 Inspect Main Reservoir

Equipment Conditions:

- Wheels chocked
- Service Brakes applied
- Turn off power to 208 Vac Air Supply Unit at circuit breaker

Tools and Materials Needed:

- Cantesco leak detector
- Standard hand tools

1. Inspect reservoir (1) for visible damage such as dents, scratching, scoring, or corrosion. If excessively damaged, replace reservoir. See Figure 5-3.

To replace the Main Reservoir, refer to Section 7.4.6.4 of Section 0200, Car Body of the Running Maintenance and Servicing Manual.

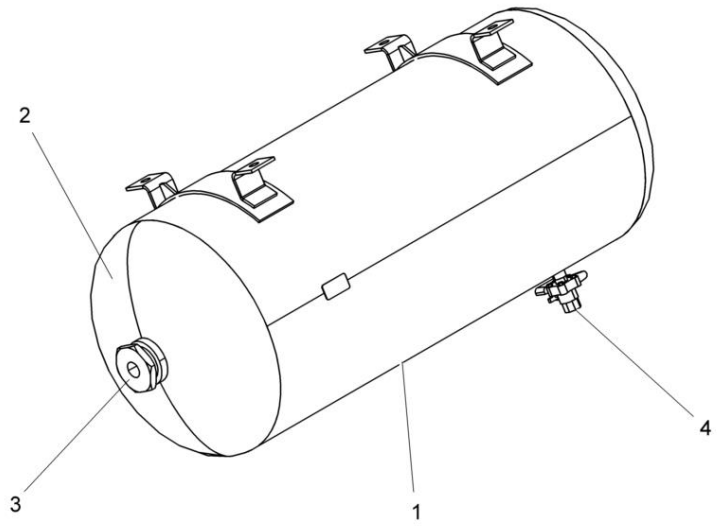

Figure 5-3: Main Reservoir

2. Check all vehicle pipe connections to reservoir (1). Tighten all loose connections. If loose connections cannot be tightened at reservoir, replace reservoir.

3. With the system pressurized, apply soapy water solution, Cantesco leak detector or equivalent to pipe connections, welded seams (2) and all vessel ports (3) on reservoir (1).

4. If bubbles form at pipe connections at vessel ports (3), drain reservoir (1) of air then disconnect and reseal vehicle pipe connections.

5. If bubbles form at welded areas of reservoir ports (3) or welded seams (2), replace reservoir.

6. Remove all traces of soapy water solution with clean shop towel immediately after bubble test.

7. Inspect all mounting hardware, such as bolts, nuts, washers and retaining mechanisms, for proper attachment. Tighten or replace as necessary.

8. Place container under drain valve (4).

WARNING

VENTING AIR IS EXTREMELY LOUD AND MAY CAUSE HEARING DAMAGE. WEAR EAR AND EYE PROTECTION OR INJURY MAY RESULT.

9. Pull in lock release and turn drain valve handle slowly towards parallel position to open. Air will quickly exit outlet of drain valve.

10. Allow all water to drain from reservoir (1) and close drain valve when water is drained completely. Rotate drain valve handle to fully-locked perpendicular position.

5.1.4 Inspect Brake Reservoir

Equipment Conditions:

- Wheels chocked
- Parking Brakes applied
- Turn off power to 208 Vac Air Supply Unit at circuit breaker

Tools and Materials Needed:

- Cantesco leak detector
- Standard hand tools

1. Inspect reservoir (1) for visible damage such as dents, scratching, scoring, or corrosion. If excessively damaged, replace reservoir. See Figure 5-4.

To replace the Brake Reservoir, refer to Section 7.4.6.5 of Section 0200, Car Body of the Running Maintenance and Servicing Manual.

2. Check all vehicle pipe connections to reservoir (1). Tighten all loose connections. If loose connections cannot be tightened at reservoir, replace reservoir.
3. With the system pressurized, apply soapy water solution, Cantesco leak detector or equivalent to pipe connections, plugged inspection openings (2), vessel ports and all welded seams (3) on reservoir.
4. If bubbles form at pipe connections, drain reservoir (1) of air then disconnect and reseal vehicle pipe connections.
5. If bubbles form at welded areas of reservoir ports (2) or welded seams (3), then replace reservoir.
6. Remove all traces of soapy water solution with clean shop towel immediately after bubble test.
7. Inspect all mounting hardware, such as bolts, nuts, washers and retaining mechanisms, for proper attachment. Tighten or replace as necessary.

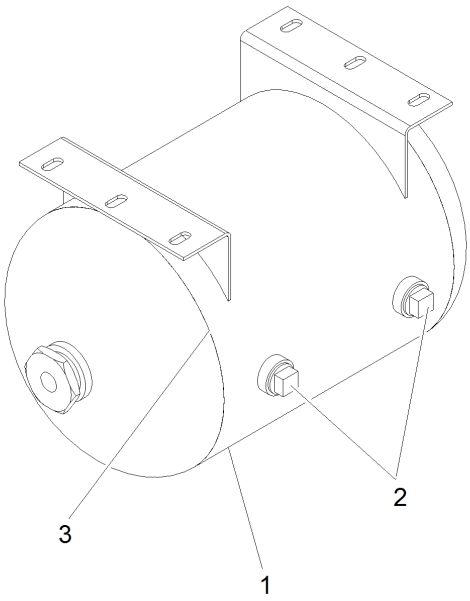

Figure 5-4: Brake Reservoir

5.1.5 Inspect ECU

Equipment Conditions:

- Wheels chocked
- Parking Brakes applied
- Turn off power to ECU at the appropriate Friction Brake A, Friction Brake B, or Friction Brake C circuit breaker.

1. Inspect Electronic Control Unit (1) for obvious damage such as severe scratches, damage to any of the circuit boards (2), or missing or loose circuit boards (2), see Figure 5-5.
2. Disconnect each connector (3) and inspect both male and female connectors for damage to pins or missing pins.

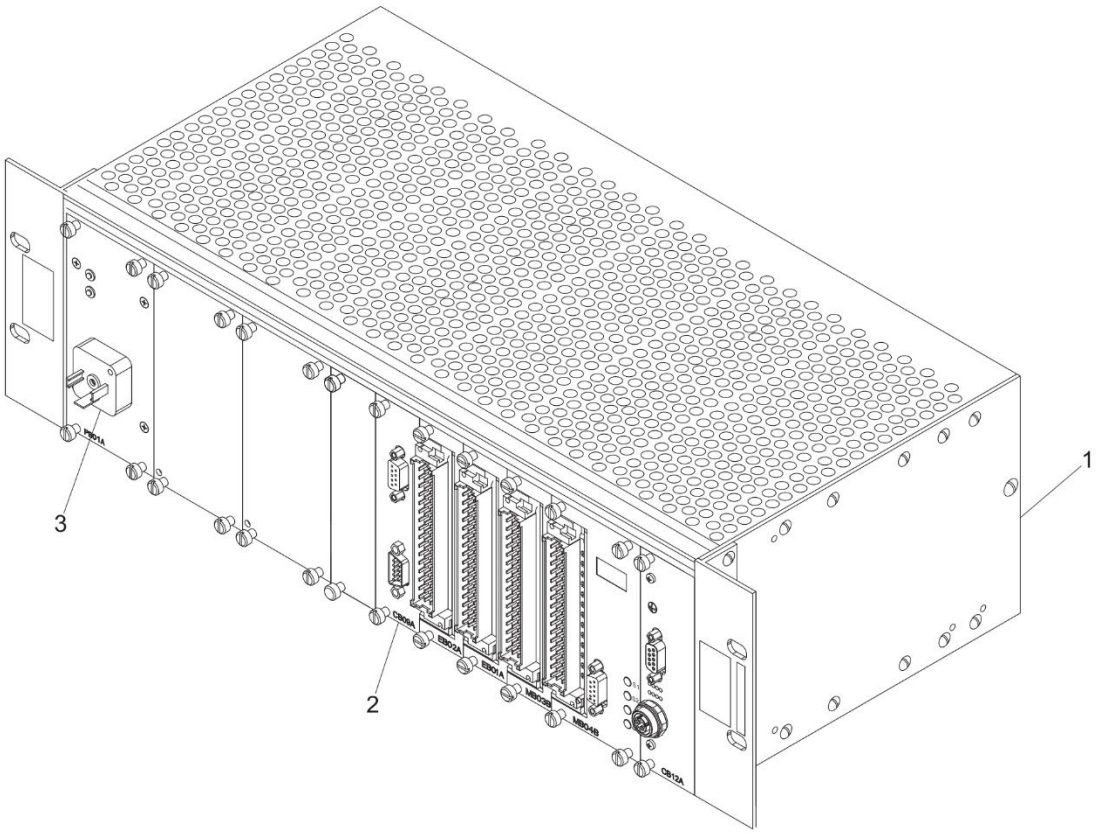

Figure 5-5: ECU Inspection

5.1.6 Inspect Hoses and ASU

Equipment Conditions:

- Wheels chocked
- Parking Brakes applied
- Turn off power to 208 Vac Air Supply Unit at circuit breaker

Tools and Materials Needed:

- Small and large Nylon bristle brushes

1. Clean the cooler fins and the cooling ribs on the cylinders with a pressure washer.
2. If dirt deposits are severe, a cleaning substance such as Hakupur 50R or SurTec 104 may be added (observe the related safety data sheets). SurTec 104 is available to purchase in the U.S.
3. Small and large Nylon bristle brushes should be used.

4. Inspect each hose connection on the ASU to be sure it is secure, also inspect hoses for damage or excessive wear. Replace any damaged or worn hoses and tighten loose hose connections.

5. Inspect exterior of ASU for damage. If excessive damage is observed, repair or replace damaged component. If ASU is damaged beyond serviceability, replace ASU.

6. Check all vehicle electrical connections to ASU. Make sure cables are not frayed or damaged. Replace damaged cables.

7. Inspect air inlets and outlets for obstructions, dirt and debris. Clear dirt and debris from air passages.

8. Check vacuum indicator. If orange/red indicator tip is extended, replace air intake filters.

9. Check torque stripes on all attaching parts. If torque strip shows signs that attaching part has rotated, torque part in accordance with ASU HRMM.

10. Reapply power to ASU at circuit breaker. Confirm that ASU charges main reservoirs and cuts out when MR pressure reaches 130 psi to 150 psi to the main reservoir.

11. Open MR drain valve and confirm that ASU cuts in at 130 psi.

5.1.7 Inspect Brake Disc

Equipment Conditions:

- Wheels chocked
- Parking Brakes applied
- Turn off power to 208 Vac Air Supply Unit at circuit breaker

Tools and Materials Needed:

- Vernier Caliper
- Socket wrench
- Torque wrench

NOTE: The decision as to whether the friction disc must be reconditioned or removed and replaced depends on the amount of wear and the condition of the friction disc established during inspection as denoted by the following inspection criteria.

WARNING

BRAKE DISC AND SURROUNDING EQUIPMENT MAY BE EXTREMELY HOT. USE CAUTION WHEN WORKING IN BRAKE DISC AREA OR BURN INJURIES MAY OCCUR.

NEVER PLACE ANY BODY PART BETWEEN BRAKE PAD AND BRAKE DISC. IF BRAKES ARE ACCIDENTALLY APPLIED, CRUSHING INJURIES MAY OCCUR.

1. Inspect hub (13), see Figure 5-6 for cracks. Hub may not be cracked in any way. If cracked, replace brake disc, see Section 6.3.9 of this manual section.

   Hair cracks (see Figure 5-7) are finely ramified cracks found on the friction rings of axle-mounted brake discs due to the exposure of severe thermal stresses. Although hair cracks give the appearance of a crack on the friction ring surface, there is no actual penetration into the metal.

2. Randomly arranged hair cracks of unlimited number are acceptable in the friction surfaces of both rings.

Table 5-1. Brake Disc Parts List

Item Number	Description	Units per Assembly
1	HEX-HEAD BOLT	12
2	PIN	2
3	FRICTION DISC	1
4	FRIC. DISC SEGMENT	2
5	SITTING BOLT	2
6	BUSH	4
7	NUT	2
8	CLAMPING RING	1
9	SPRING WASHER	24
10	LOCK-NUT	12
11	SCREW PLUG	1
12	SEALING RING	1
13	HUB	1

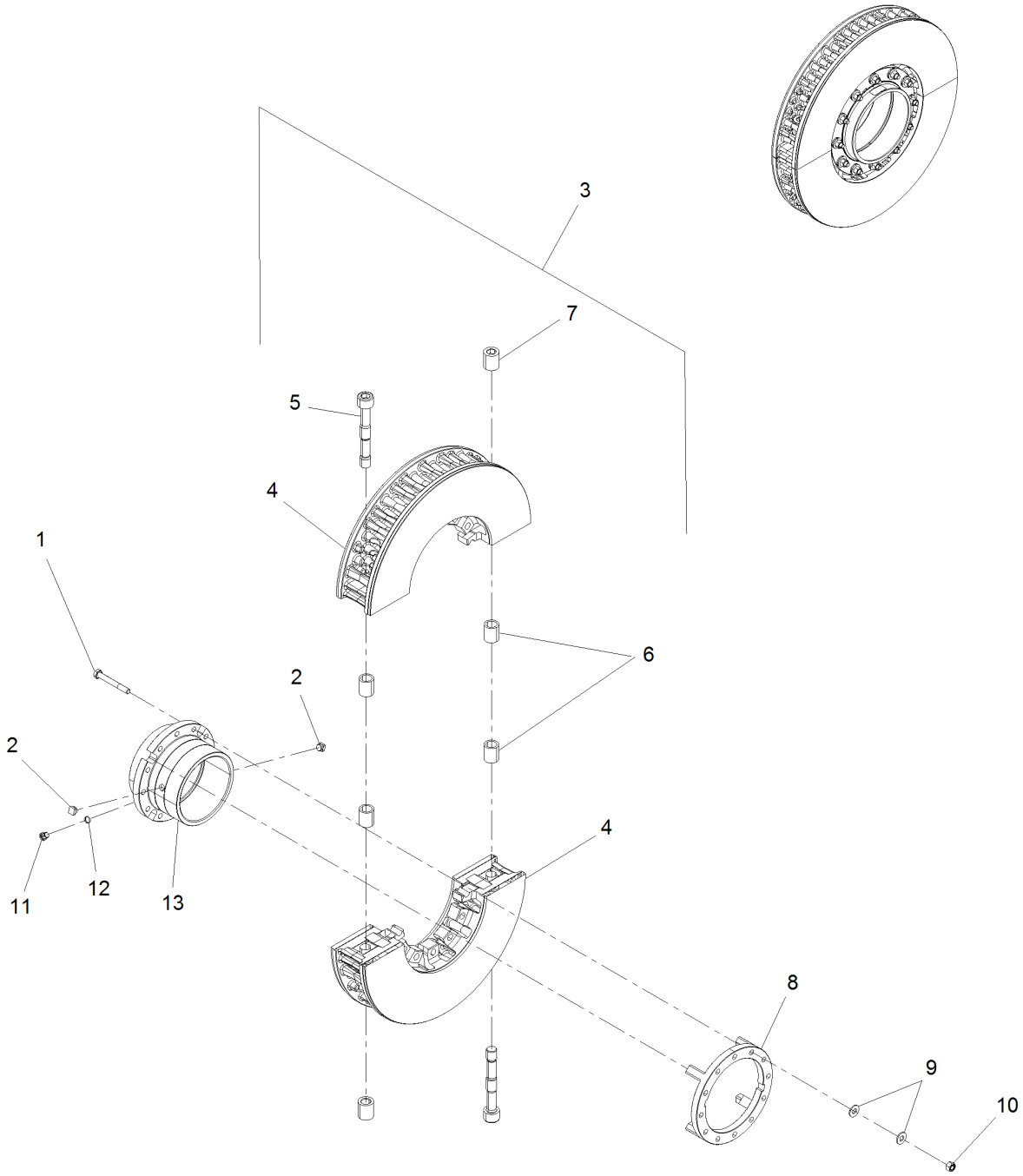

Figure 5-6: Brake Disc

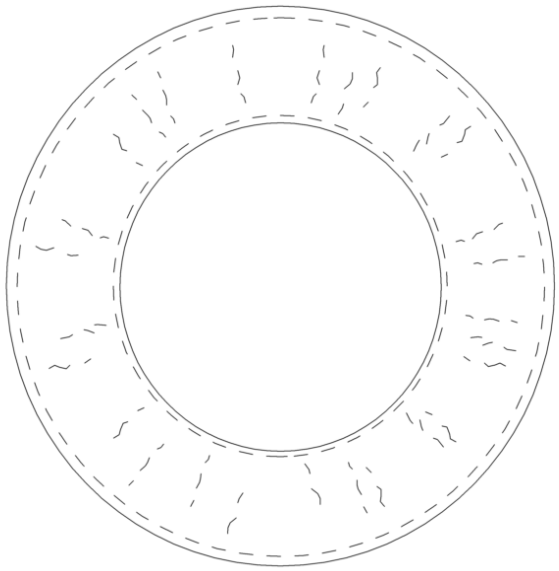

Figure 5-7: Acceptable Hair Cracks in Friction Surface

3. Incipient cracks see Figure 5-8.

NOTE: Figure 5-8 shows the limits for condemnation of the brake disc.

a. Incipient cracks are cracks that do not extend from the inside diameter of the friction ring to the outside diameter of the friction ring. The friction ring may contain several randomly arranged incipient cracks that are within **acceptable limits** provided that:
    - If the crack does not reach an edge of the friction ring (a), then it must measure less than 80 mm in length.
    - If the crack does reach an edge of the friction ring (b), then it must measure less than 50 mm in length.
    - Two incipient cracks (a) must not come within 15 mm of one another.
    - If the above is true and an emerging crack that touches an edge (b) comes within 7 mm of an incipient crack that does not touch an edge (a), the total length (a1) shall not be greater than 100 mm.

b. Incipient cracks with the lengths below are **conditionally acceptable** given the following criteria is met and may continue to be used until the next inspection:
    - A single crack that does not reach either edge (a) of the friction ring may be between 80–100 mm in length.
    - A single crack that reaches an edge (b) of the friction ring may be between 50–80 mm in length.
    - If the above is true, the friction ring may contain incipient cracks (b) extending radially from the inner or outer rim, provided the distance from the nearest incipient cracks (a) or (b) is greater than 30 mm.

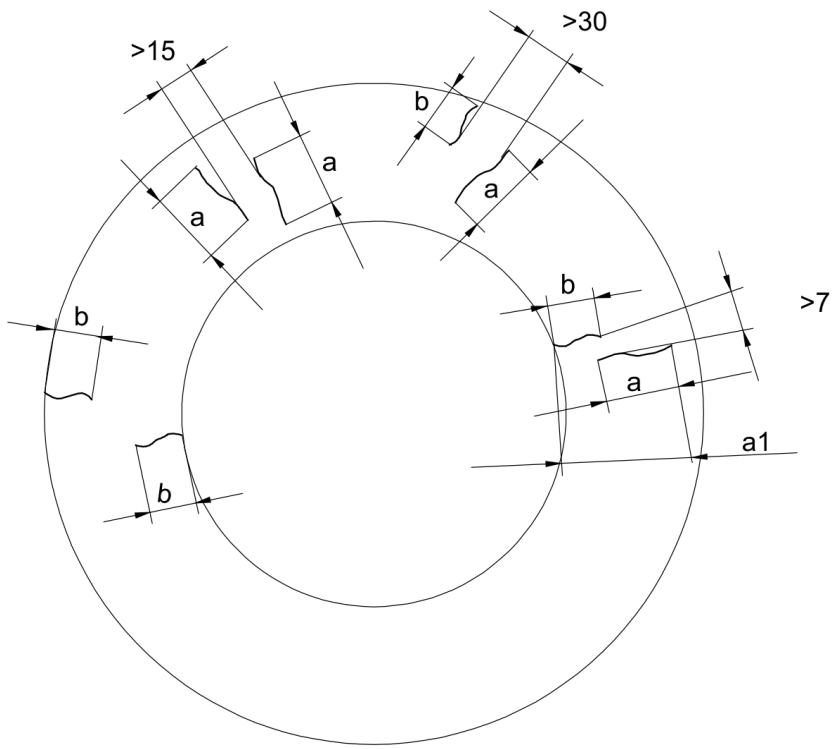

Figure 5-8: Acceptable Incipient Cracks in Friction Surface

c. Incipient cracks with the following lengths are **not acceptable** and the brake disc needs to be replaced immediately.
    - A single crack that does not reach any edge (a) of the friction ring that is over 100 mm in length.
    - A single crack that does reach an inside edge (b) of the friction ring that is over 80 mm in length.

4. Through-cracks, see Figure 5-9, Figure 5-10 and Figure 5-11:

a. A through-crack is a crack that reaches from the inner friction ring diameter to the outer friction ring diameter or one friction ring side. Through-cracks are not acceptable in the friction rings.

b. Incipient and through-cracks are not acceptable in the joining bars of the brake disc.

c. Through-cracks are not acceptable at the connecting flanges of split friction rings.

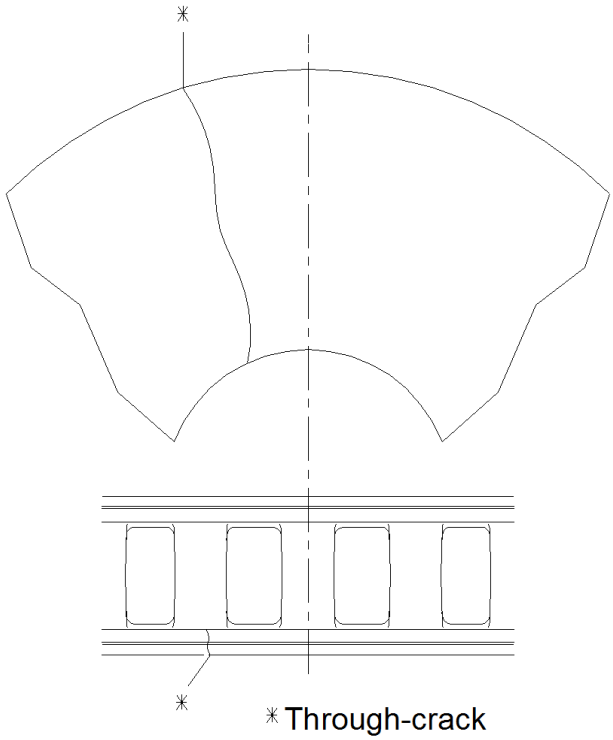

Figure 5-9: Typical Through Crack in Friction Ring

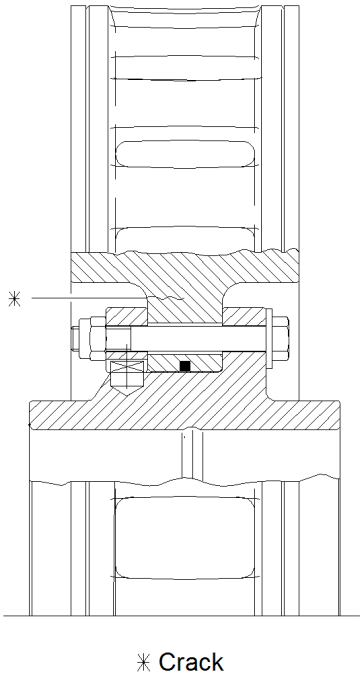

Figure 5-10: Typical Crack in Joining Bars

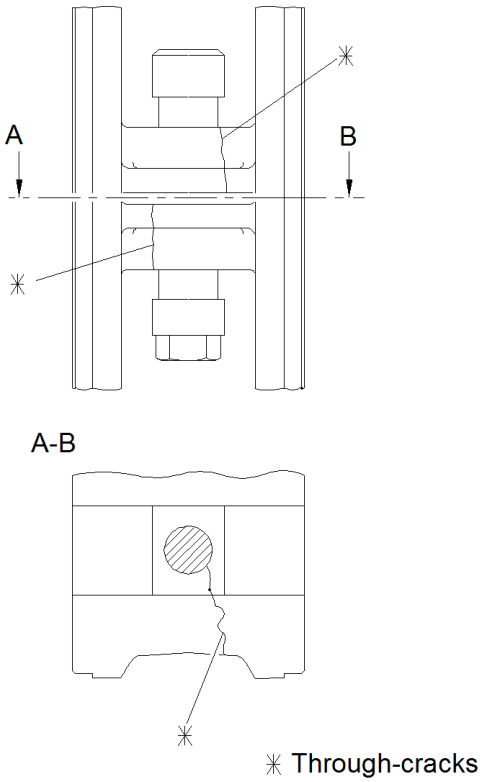

Figure 5-11: Typical Through Crack in Connecting Flange

5. Scorch marks, see Figure 5-12.

NOTE: Scorch marks are caused by quickly rising friction ring temperatures in conjunction with inadequate heat dissipation. The cause of the scorching must be traced and corrective action must be taken before resuming service

Inspect friction rings for scorch marks. Scorch marks will appear as a black or gray discoloration in a concentrated area on the surface of the friction ring. Scorch marks can be of varying size or shape.

Scorched friction rings may continue to be used if they contain neither through-cracks nor substantial incipient cracks.

If such friction rings are retained for further service, daily visual inspections must be administered.

Figure 5-12: Scorch Marks on Disc

6. Disc wear, see Figure 5-13:

NOTE: The cause of scoring must be corrected. Inspect the brake pads per Section 5.1.9 in this document. If hard inclusions or material deposits are found, replace the brake pads, see Section 6.3.3 of this manual section.

Facing off may be continually repeated until the friction ring's condemning limit (G) is reached at the wear identification grooves (V) (7 mm from friction surface to wear identification grooves). If a friction ring is machined down to within ±0.3 mm (0.011 in) of its condemning limit, it may continue to be used for another 0.5 mm (0.019 in) of wear on either friction surface, provided that there are no incipient cracks and the residual thickness (S) on both sides is at least 14 mm (0.55 in).

Examine the friction ring surfaces for scoring and concave wear, see Figure 5-13. Scoring up to approximately 1 mm (0.039 in) deep and concave wear (H) of less than 2 mm (0.078 in) are acceptable. If the scoring exceeds 1.2 mm (0.0472 in) deep or the hollow wear exceeds 2 mm (0.078 in), then the friction surfaces must be faced off.

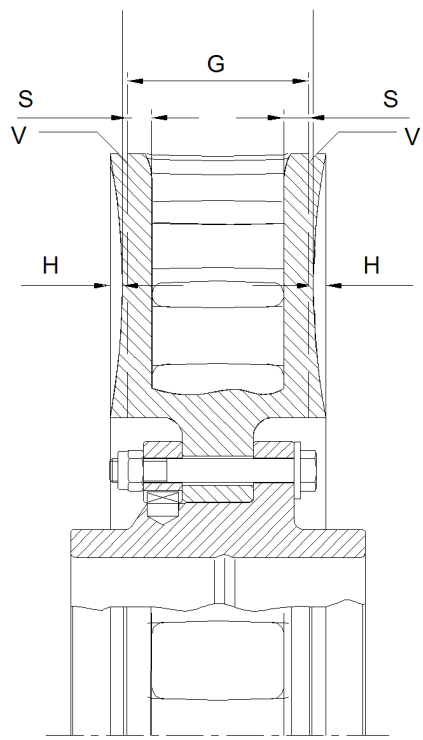

G – Condemning Limit – 96 mm (3.77 in.), 7 mm (0.28) maximum wear on each face
H – Concave Wear – Maximum 2 mm (0.078 in.)
S – Residual Thickness - Minimum 14 mm (0.55 in.)
V – Wear Identification Grooves

Figure 5-13: Wear Limits of Friction Ring

7. Inspect the friction surfaces for slanting wear, see Figure 5-14. Slanting wear shall not exceed 2 mm (0.078 in) measured from the inner to the outer edge or from the outer to the inner edge. Otherwise, face-off the friction ring.

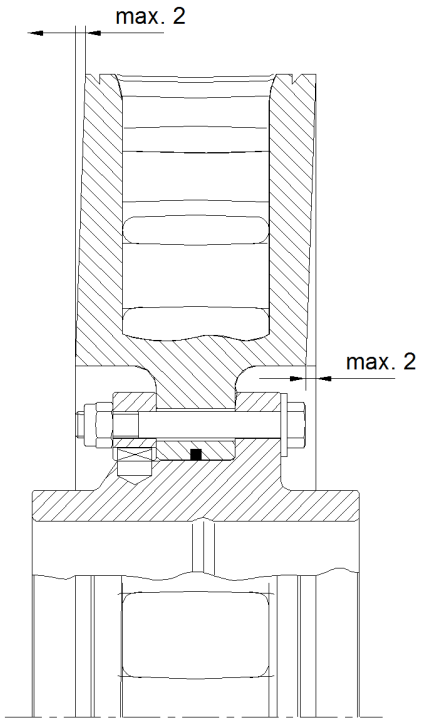

Figure 5-14: Wear Limits of Friction Ring

8. Check the friction ring for axial run-out and equal wear on both sides.

9. If the two friction surfaces are worn by very different amounts, the friction ring must be faced-off.

10. If the axial run-out (measured in the middle of the friction surfaces) exceed 0.5 mm (0.019 in.), the friction ring must be faced-off, see Figure 5-14.

11. The friction rings must be faced-off on both sides to the same friction ring thickness (S).

12. Checking the outward condition and inspecting the fasteners.

CAUTION

BEWARE OF INCORRECT FASTENING! LOOSENING OR POSSIBLE BREAKAGE OF THE CONNECTING ELEMENTS CAN LEAD TO LOSS OF FUNCTIONALITY, DAMAGE TO THE VEHICLE OR DERAILMENT DUE TO THE BRAKE DISCS FALLING OFF. BOLTED JOINTS TREATED WITH A SEALANT (E.G. LOCTITE) (SPECIAL CASES) MUST NEVER BE RETORQUED ONCE THEY HAVE BEEN ASSEMBLED.

a. The hub must be a tight fit on the axle. Any axial displacement along the axle or rust effluent from the hub's interference fit is unacceptable. Only check the bolts fastening the hub of flange mounted brake discs if you suspect that they are loose and, if required, tighten accordingly.

b. Check the friction ring for tight seating on the hub by jolting the friction ring. In case of doubt, put one finger on the joint between the friction ring and hub and cautiously knock the friction ring with a hammer. If the friction ring is loose, the friction ring and hub will be felt to vibrate differently. Only check the tightening torque of the fasteners if any of the parts is thought to be loose. If required, then retorque accordingly.

c. Only for split friction rings: Check the division fasteners for tightness. Only check the tightening torque of the fasteners if any of the parts is thought to be loose. If required, then tighten accordingly. On the outer rim of the parting joints, a gap of max. 1 mm is permitted after several years of use, see Figure 5-15. No gap of any kind is allowed at the inside rim.

d. Dirt collecting in the cooling duct of the friction ring can, for instance, be expelled by compressed air as the need arises.

NOTE: If loose bolted joints are found, inform KNORR-BREMSE.

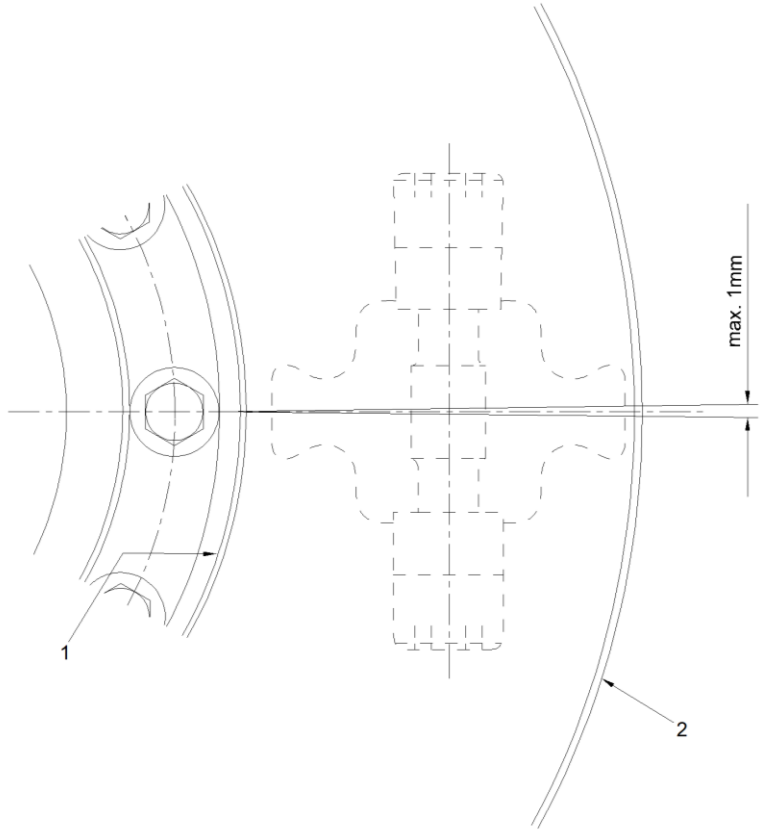

Figure 5-15: Gap Limits of Friction Ring

5.1.8 Inspect Brake Caliper

Tools and Materials Needed:

- Leak Detector
- Socket wrench
- Torque wrench, 162 ft-lbs
- Solvent
- Loctite 7471 Primer
- Loctite 243

WARNING

BEFORE CHECKING THE CLEARANCES AT THE BRAKE DISC, ENSURE THAT THE VEHICLE BRAKES ARE RELEASE AND CANNOT BE OPERATED.

1. Ensure that the vehicle is chocked.
2. Apply service brakes.
3. Apply leak detector around hose connections.

NOTE: No air is permitted to leak.

4. If a leak is detected, tighten connection.
5. Remove all traces of leak detector immediately following the detection test.
6. Inspect the bellows (1) around the thrust rod adjuster (2) and thrust rod (3) for damage, see Figure 5-16.
7. If a damaged bellows (1) is found, replace per the Heavy Repair manual.
8. Visually inspect pivot pin bolt (4). And verify intact torque stripe. If torque stripe is not in line, retorque pivot pin bolt (4) as follows:

a. Remove pivot pin bolt (4) and two lock washers (5). Discard lock washers.
b. Degrease threads of pivot pin bolt (4) using solvent.
c. Apply Loctite 7171 primer and Loctite 243 to threads of pivot pin bolt (4).
d. Install pivot pin bolt (4) and two new lock washers (5), oriented as shown in figure. Torque pivot pin to 162 ft-lbs (220 Nm).

9. Visually inspect brake caliper mounting bolts and verify intact torque stripe.

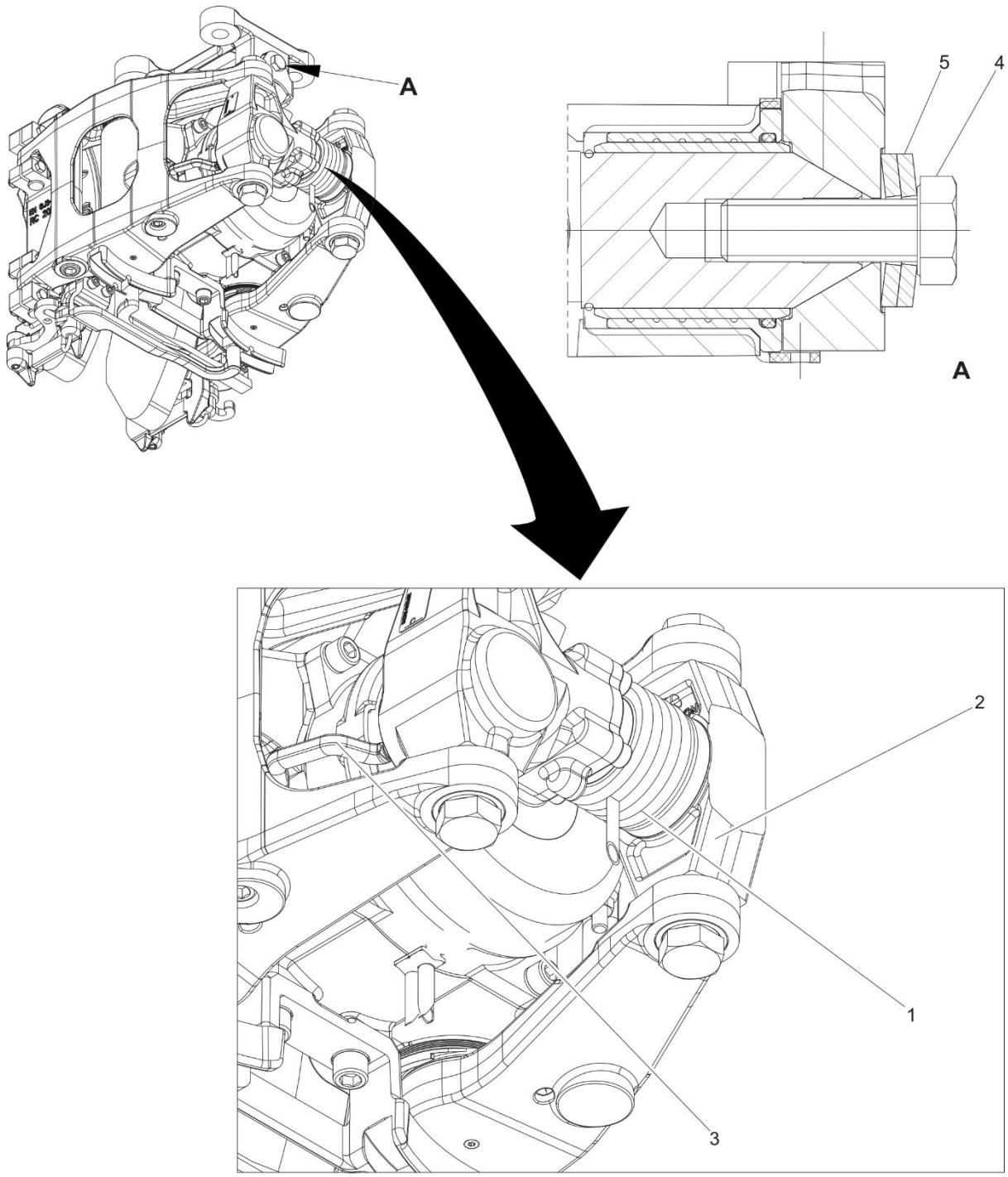

Figure 5-16: Brake Caliper Components

5.1.8.1 Test

1. Ensure that the vehicle is chocked.
2. Apply and release the service brakes several times to ensure caliper is operating properly.
3. Release the service brakes, and apply the parking brake.
4. Release parking brake by pulling the emergency release handle. The parking brake must release when the emergency release gear is operated.
5. Apply and release service brakes. This will reset the parking brake mechanisms.

WARNING

BEFORE CHECKING THE CLEARANCES AT THE BRAKE DISC, ENSURE THAT THE VEHICLE BRAKES ARE RELEASE AND CANNOT BE OPERATED.

6. Check the clearance between the brake pads and brake disc. This value should be 1.5 mm ± 0.5 mm.

5.1.9 Inspect Brake Pad

Equipment Conditions:

- Wheels chocked
- Parking brakes applied

Tools and Materials Needed:

- Vernier Caliper

1. Visually inspect brake pads, see Figure 5-17 for damage such as scorching or material deposits. If brake pads appear damaged replace immediately, see Section 6.3.3 of this manual section.
2. Measure the pad thickness (at the thinnest part) from the back of the pad. This thickness must be greater than 5 mm. Otherwise, replace the pad.
3. If any portion of the pad has worn below the groove, replace the pad.

NOTE: The brake pads must be replaced immediately if the inspection reveals scorching, material deposits or unacceptable scoring in the friction surfaces of the brake disc.

<u>REPLACEMENT</u>

If the brake pads are replaced (New Pads from Stock) check the thickness of replacement pads to ensure they do not differ by more than (2) mm from one side of the brake caliper to the other.

INSPECTION

During Inspection intervals check the thickness of the pads to ensure they do not differ by more than 4 mm from one side of the brake caliper to the other.

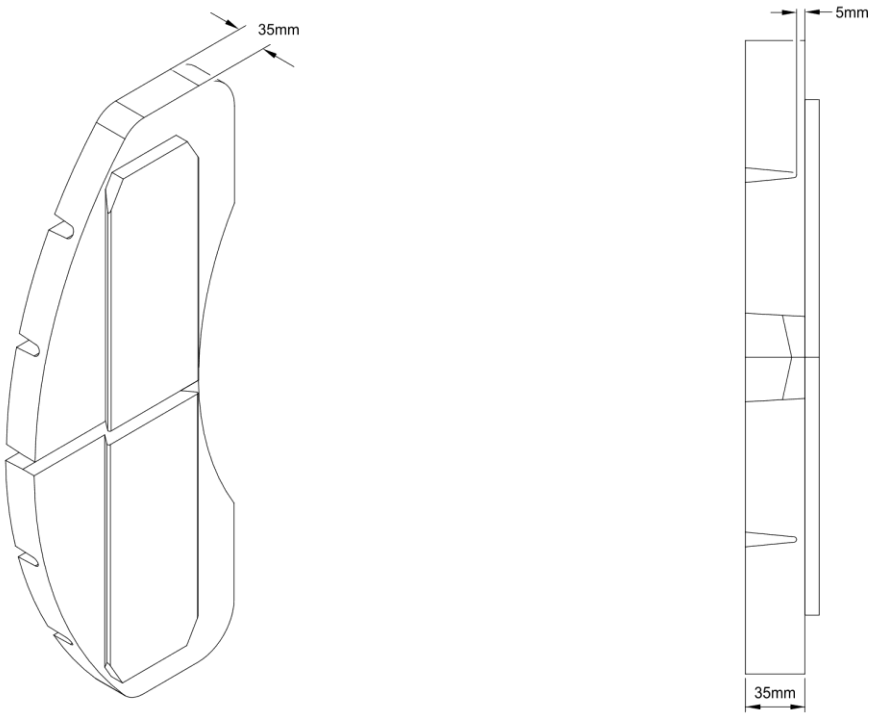

Figure 5-17: Brake Pad Inspection

5.1.10 Inspect Apply and Release BCU Magnet Valves

Equipment Conditions:

- Wheels chocked
- Parking brakes applied

Tools and Materials Needed:

- Torque wrench, 22 in-lbs
- Torque wrench, 6.3 ft-lbs
- O-ring, p/n Ii67043/024A, qty 3

1. Open enclosure on front of BCU, see Figure 5-18.
2. Check electrical connectors (3) on magnet valves (1), EMV, FBCV and PBMV (motor truck only). If connector is loose, tighten screw (4) on bottom of connector securely.
3. Ensure connector wiring (5) is not damaged.

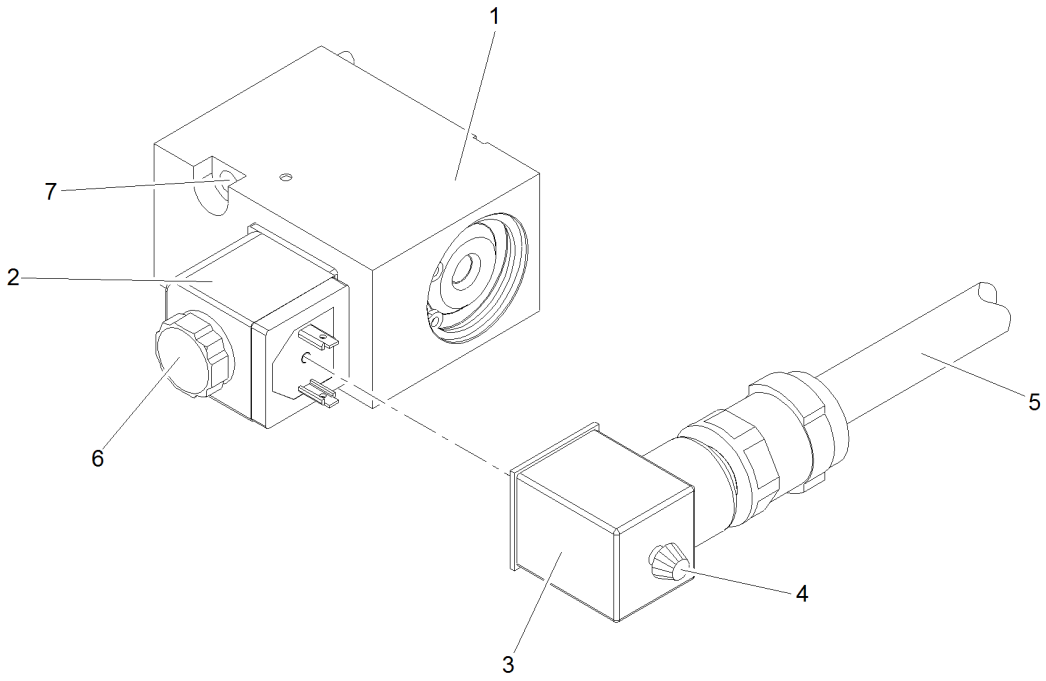

Figure 5-18: Inspect Magnet Valve

4. Ensure valve body (2) is secured to valve base (1). If valve body is loose tighten nut (6).

5. Check torque stripes on two 6-32 screws (7) securing magnet valve (1) base to manifold. If torque stripe is broken, remove hex nut (6) and remove valve from manifold. Discard three O-rings.

6. Remove old torque stripe, clean screw threads and apply anti-seize compound to threads.

7. Apply a light coat of grease on three new O-rings and install in valve (1).

8. Place valve onto manifold and secure with two screws (7), torque to 6.3 ± 0.6 ft-lbs. Reapply torque stripe.

9. Listen for air leakage. If air leakage is suspected, apply soapy water solution around base of AMV or RMVs (1). No bubbles are allowed to form. If bubbles form, remove the valve (1). Discard three O-rings.

10. Clean all traces of soapy water from AMV/RMVs (1).

11. If removed, install valve (1) onto manifold and secure with two screws (7), torque to 22 ± 2.2 in-lbs. Reapply torque stripe.

12. Close and secure BCU enclosure.

5.1.11 Inspect Parking Brake Cutout Valve

Equipment Conditions:

- Wheels chocked
- Parking brakes applied

Tools and Materials Needed:

- Torque wrench, 6.3 ft-lbs

1. Check to see if air is leaking between the valve housing and the BCU manifold, between the switch and valve housing, see Figure 5-19.

   If leaking is found torque two screws securing cutout valve to BCU manifold. Torque screws to 6.3 ± 0.6 ft-lbs.

   Tighten two screws securing switch to valve housing.

   Replace cutout valve if leaking is not stopped.

2. Check to see if the switch releases air when in the open position, replace if not operating correctly.

3. Ensure electrical connector on top of cutout valve is secure. If loose, tighten thumb screw on top clockwise until tight.

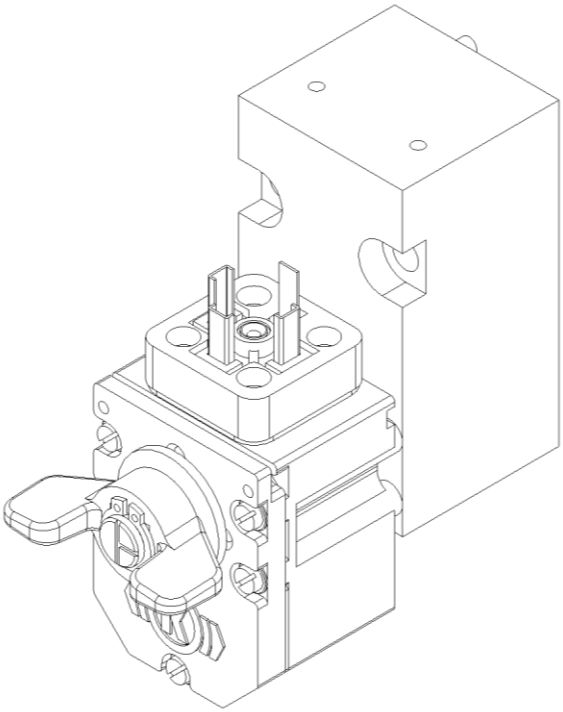

Figure 5-19: Parking Brake Cutout Valve Inspection

5.1.12 Compressor Warm-Up

Equipment Conditions:

- Wheels chocked
- Emergency brakes applied

Tools and Materials Needed:

N/A

1. Ensure train is powered ON with Emergency brakes applied.
2. Open MR drain valve slightly to decrease MR pressure so that compressor powers ON.
3. Leave MR drain valve open to keep MR pressure below 150 psi.
4. Allow compressor to run for 90 minutes.
5. After 90 minutes, close MR drain valve.
6. Allow compressor to build MR pressure to 150 psi and power OFF.

THIS PAGE INTENTIONALLY LEFT BLANK

CHAPTER 6.0

CORRECTIVE MAINTENANCE PROCEDURES

6.1 Introduction

This chapter provides maintenance procedures for LACMTA Friction Brake System components.

6.2 Safety Information

Some of the procedures in this section are preceded by warnings, cautions and notes regarding potential hazards in handling this equipment. All of these warnings should be carefully read and understood before proceeding, and then be followed closely while performing related tasks. The prominent warnings for this equipment are:

WARNING

BECAUSE THIS EQUIPMENT OPERATES AT LETHAL POWER LEVELS, WARNINGS AND REMINDERS ABOUT REMOVAL OF POWER, IN ACCORDANCE WITH LACMTA REGULATIONS SHOULD BE COMPLETELY UNDERSTOOD BEFORE ANY WORK IS BEGUN.

WARNING

SOME COMPONENTS MAY CONTAIN HAZARDOUS CHEMICALS, OR THEIR USE MAY BE REQUIRED IN CLEANING OR SERVICING SUCH COMPONENTS. IN THESE CASES, THE MANUFACTURER'S WARNINGS SHOULD BE CLOSELY HEEDED, AND ONLY THOSE ITEMS SPECIFICALLY AND CURRENTLY APPROVED FOR USE BY LACMTA SHOULD BE EMPLOYED, REGARDLESS OF ANY RECOMMENDED USE IN THE PROCEDURE.

WARNING

MUCH OF THE EQUIPMENT ON THIS VEHICLE IS LOCATED UNDER THE FLOOR. SPECIAL CAUTION SHOULD BE TAKEN WHEN ACCESSING OR SERVICING ITEMS IN THIS LOCATION.

WARNING

SOME COMPONENTS IN THIS EQUIPMENT ATTAIN TEMPERATURES THAT CAN CAUSE SEVERE BURNS, AND OTHERS, IF MISHANDLED, MAY CAUSE SERIOUS CUTS OR PRODUCE TOXIC FUMES OR RESIDUES. CLOSELY FOLLOWS MANUFACTURER'S WARNINGS AND RECOMMENDED PROCEDURES FOR HANDLING THESE COMPONENTS.

WARNING

SOME OF THE EQUIPMENT CONTAINS COMPONENTS UNDER SPRING TENSION THAT CAN BE HAZARDOUS IN AN UNCONTROLLED RELEASE. OTHER COMPONENTS CONTAIN FLUIDS OR GASSES UNDER PRESSURE THAT CAN READILY CAUSE PERSONAL INJURY IF IMPROPERLY RELEASED. WARNINGS AND SPECIFIC INSTRUCTIONS FOR HANDLING SUCH COMPONENTS SHOULD BE CLOSELY ADHERED TO.

WARNING

MANY EQUIPMENT ITEMS AND COMPONENTS ARE QUITE HEAVY AND MAY REQUIRE LIFTING DEVICES OR ASSISTANCE FOR THEIR SAFE HANDLING, AND ARE GENERALLY NOTED. HOWEVER, ALL EQUIPMENT THAT LOOKS HEAVY, PROBABLY IS, AND SHOULD BE TREATED ACCORDINGLY.

NOTE: The use of WARNING statements is necessarily limited to significant cases, so that effectiveness will not be reduced by too frequent usage. The absence of such statements does not, in any way, imply the absence of hazards which may be present anytime electrical or refrigeration equipment is activated, or when working on items with inherent hazards, such as those cited above.

6.3 Maintenance Procedures

6.3.1 Replace Intake Air Filters, ASU

Tools and Materials Needed:

- Air Filter Element, qty 2

NOTE: Reset button is only to be used immediately following an air filter element replacement. Prematurely resetting vacuum indicator will not extend air filter element lifespan if orange indicator has been tripped.

1. Turn off power to ASU at circuit breaker.
2. Vent pressure at main reservoir by opening drain valve.
3. Unscrew nut securing cover (5) to air filter (1), see Figure 6-1.
4. Remove hex nut (4) and slide filter element (3) and vane (2) from air filter (1). Separate filter element (3) from vane (2).
5. Inspect and clean filter element (3) or discard used filter element.
6. Assemble vane (2) and element (3) and slide onto post inside air filter (1).

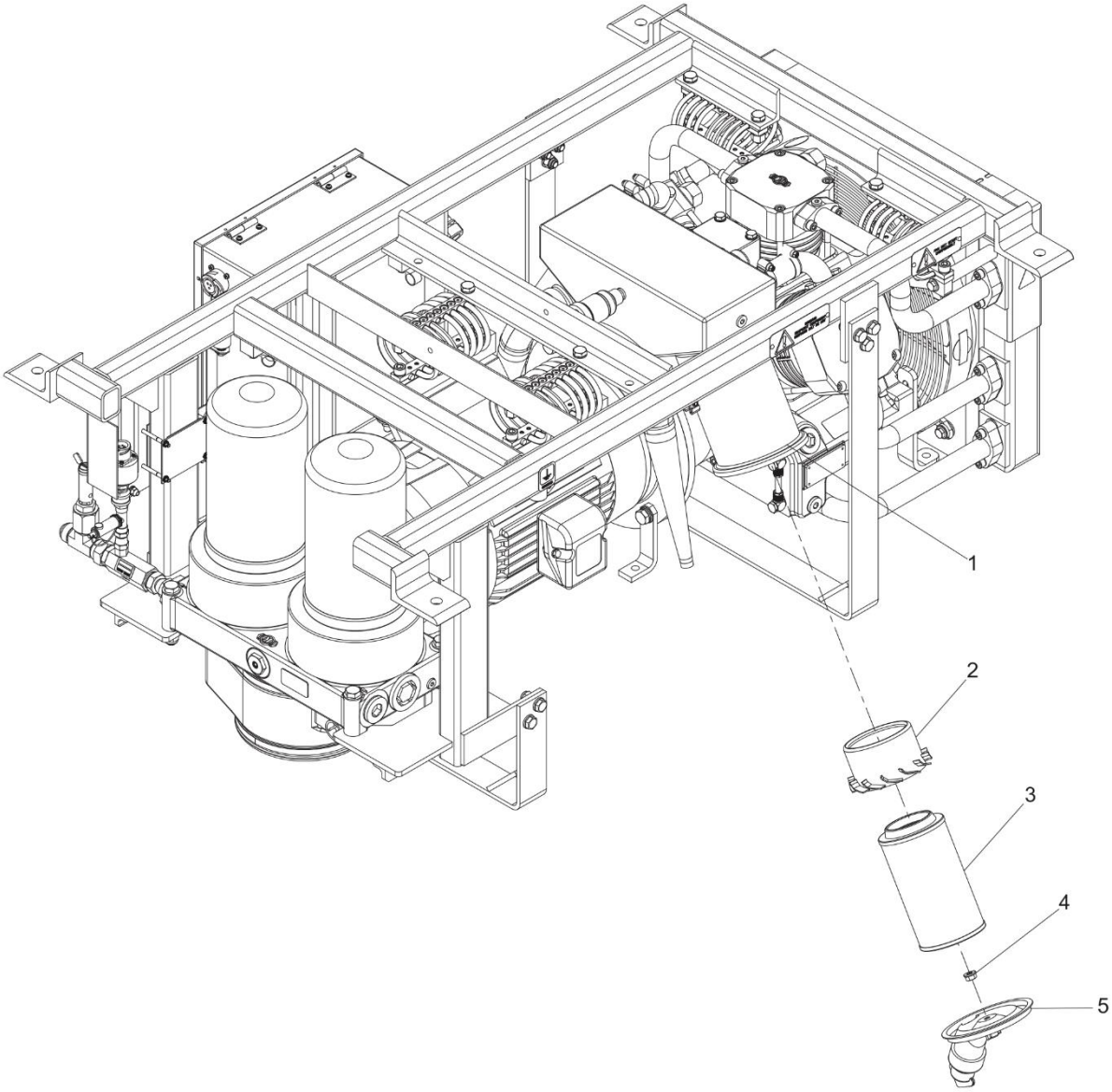

Figure 6-1: Intake Air Filters

7. Secure element (3) with hex nut (4).
8. Secure cover (5) to air filter (1).
9. Close main reservoir cutout cock drain valve.
10. Test for leakage at air filter and air filter connections. Remove all traces of leak detector after test.

6.3.2 Replace ASU Compressor Oil

Equipment Conditions:

- Wheels chocked
- Parking Brakes applied
- Turn off power to 208 Vac Air Supply Unit at circuit breaker
- Applicable MRCO cut out

Tools and Materials Needed:

- Torque wrench, 59 ft-lbs
- Torque wrench, 81 ft-lbs
- Motor Oil, Castrol HD-30, P/N 2275154
- Renolit HLT2-KB grease

CAUTION

THE OIL GRADE MUST AGREE WITH THE OIL LABEL. NEVER MIX DIFFERENT TYPES OF OIL. USE OF UNACCEPTABLE MATERIALS CAN RESULT IN DAMAGE TO EQUIPMENT, AND POSSIBLE FAILURE.

CAUTION

OBSERVE ALL APPLICABLE LACMTA GUIDELINES FOR PROPER DISPOSAL OF USE OIL.

1. Remove screw plug (2) from oil drain hole located on either side of the crankcase, see Figure 6-2.
2. While the compressor is warm, drain off oil into a waste container.
3. Clean threads of screw plug (2), apply a light film of Renolit HLT2-KB grease to threads, and install screw plug into oil drain hole and torque to 59 ft-lbs.
4. Remove screw plug (1) from oil filler hole, and add oil in oil filler hole until oil reaches max level line shown on oil level sight glass (3).
5. Clean threads of screw plug (1), apply a light film of Renolit HLT2-KB grease to threads, and install screw plug into oil filler hole and torque to 81 ft-lbs.

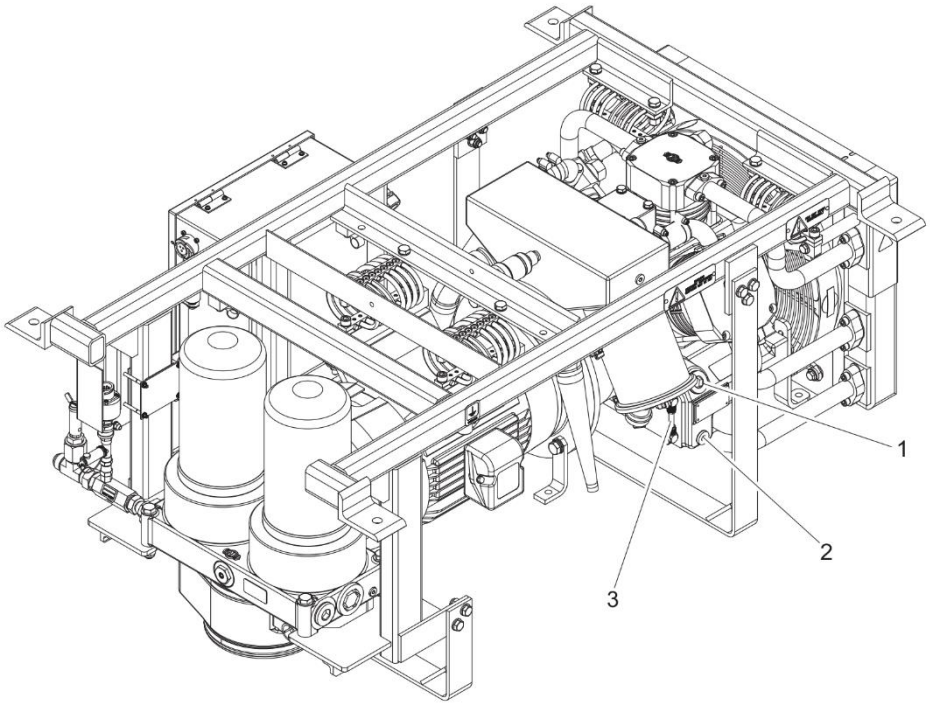

Figure 6-2: Change Compressor Oil

6.3.3 Replace Brake Pads

Equipment Conditions:

- Wheels chocked
- Parking Brakes applied

Tools and Materials Needed:

- Brake Pads

NOTE: The following procedure is applicable to both types of brake calipers, whether or not it has Parking Brake capability via a spring actuator.

WARNING

BRAKE CALIPER UNIT WITH SPRING ACTUATOR: OPERATE THE MECHANICAL RELEASE GEAR. THE SPRING ACTUATOR MUST BE RELEASED MECHANICALLY WITH THE EMERGENCY GEAR BEFORE THE BRAKE PADS ARE RELEASED.

WARNING

BRAKE DISC AND SURROUNDING EQUIPMENT MAY BE EXTREMELY HOT. USE CAUTION WHEN WORKING IN BRAKE DISC AREA OR BURN INJURIES MAY OCCUR.

NEVER PLACE ANY BODY PART BETWEEN BRAKE PAD AND BRAKE DISC. IF BRAKES ARE ACCIDENTALLY APPLIED, CRUSHING INJURIES MAY OCCUR.

1. Turn slack adjuster reset head (1) with a wrench clockwise until it gently bottoms out, this retracts the brake holders (2), see Figure 6-3.

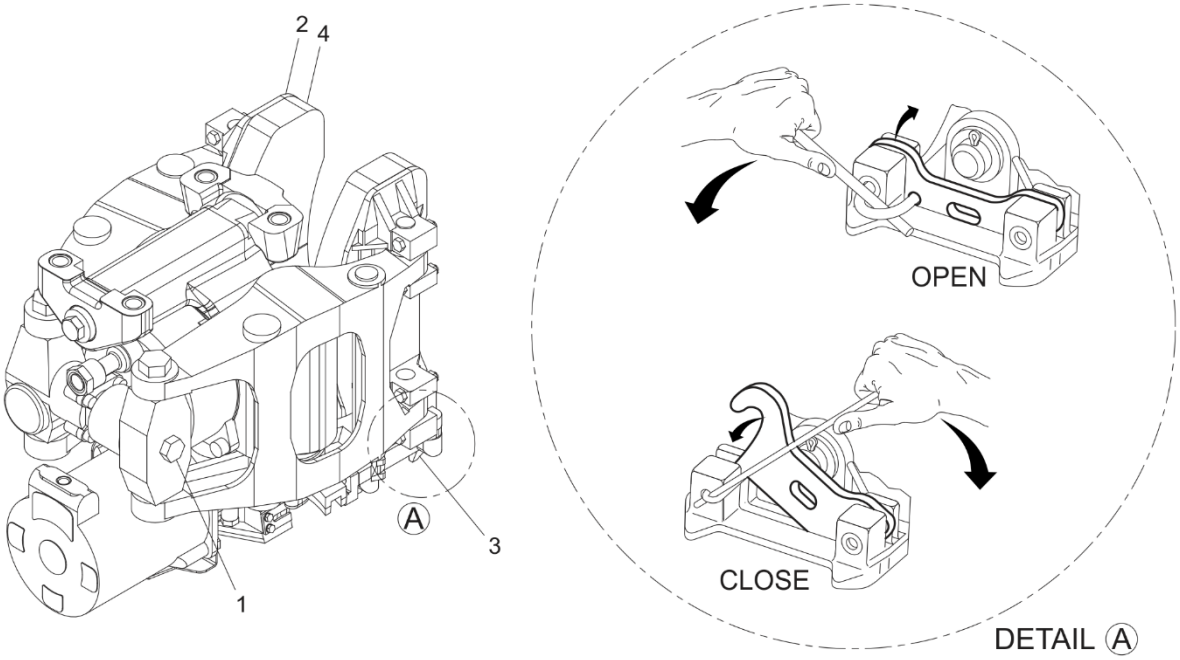

Figure 6-3: Replace Brake Pad

2. Open gate (3) with a rod-like tool, such as a screwdriver, detail A.
3. Worn brake pads (4) will drop out when gate is open.
4. Line up dovetail interface on backside of new brake pads (4) with interface on brake pad holder (2) and slide into place.
5. Close gate (3) with a rod-like tool to secure new brake pad.
6. Apply Full Service Brakes five times to reset slack adjuster to proper brake pad clearance.

6.3.4 Replace BCU Air Filters (MT & CT)

Equipment Conditions:

- Wheels chocked
- Parking Brakes applied
- Cut out MRCO and PBMRCO

Tools and Materials Needed:

- Solvent
- O-Ring
- Retaining ring
- Renolit HLT2-KB grease

1. Unlatch and remove BCU enclosure cover from BCU, see Figure 6-4.
2. Close MRCO and PBMRCO (motor truck only) cutout valves to isolate BCU and vent supply pressure.
3. Remove retaining ring (1), cover (2), O-ring (3), spring (4), and filter element (5) from air filter housing (6). Discard O-ring (2).

WARNING

SOLVENTS AND SOLVENT FUMES CAN BE HARMFUL TO HEALTH. WHEN USING SOLVENTS, WEAR EYE, SKIN, AND RESPIRATORY PROTECTION. WORK IN WELL-VENTILATED AREA. AVOID REPEATED OR PROLONGED CONTACT. KEEP SOLVENT CONTAINER CLOSED. KEEP SOLVENT AWAY FROM SPARKS, FLAMES, AND HEAT. FAILURE TO OBSERVE THESE SAFETY PRECAUTIONS CAN LEAD TO INJURY OR INTOXICATION.

4. Clean filter element (5) using solvent such as mineral spirits.
5. Inspect filter element (5) for damage or corrosion. Replace filter element if filter screen is clogged or deteriorating.
6. Lightly lubricate replacement O-ring (3) with Renolit HLT2-KB grease.
7. Install filter element (5), spring (4), O-ring (3), cover (2), and secure with retaining ring (1).
8. Open MRCO and PBMRCO (motor truck only) cutout valves.
9. Listen for leaks. If leaks are found, cut out all valves in Equipment Conditions, Remove retaining ring (1), cover (2) and make sure O-ring (3) is seated properly, then reinstall.
10. Open MRCO and PBMRCO (motor truck only) cutout valves.
11. Place BCU electronic cover on BCU assembly and secure with latches.

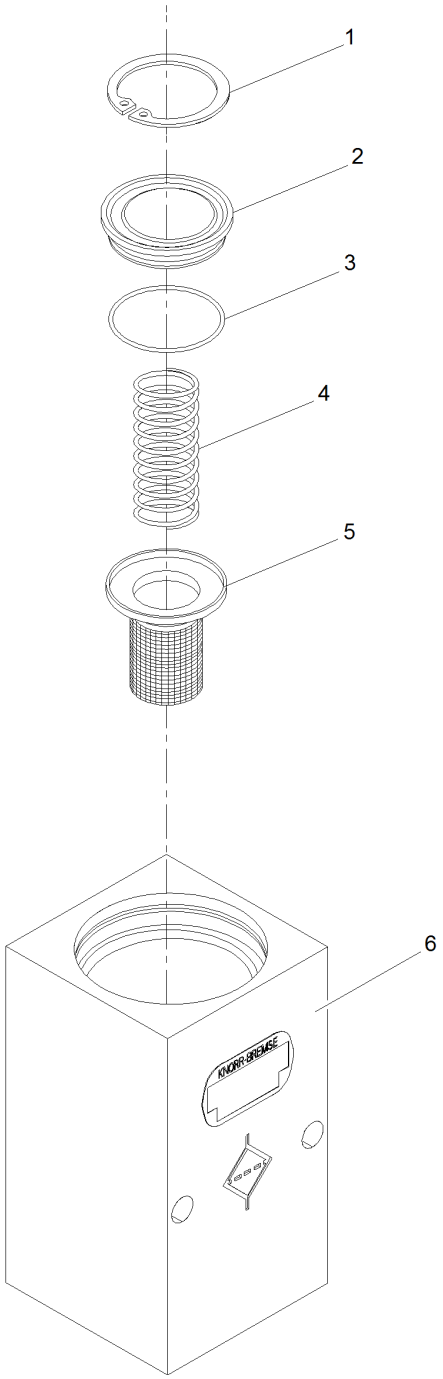

Figure 6-4: Service BCU Air Filter

6.3.5 Replace ASU Desiccant Canisters

Equipment Conditions:

- Wheels chocked
- Parking Brakes applied
- Turn off power to 208 Vac Air Supply Unit at circuit breaker
- Applicable MRCO cut out

Tools and Materials Needed:

- Desiccant canister
- O-rings
- Renolit HLT2-KB grease
- Strap wrench

1. Remove desiccant canisters (1) from air dryer (2) by turning counterclockwise. A strap wrench may be needed to loosen, see Figure 6-5.
2. Inspect adapter (4) for cracks around slots. If cracks are found, overhaul air dryer assembly and replace both adapters.
3. Lightly lubricate filter-supplied inner O-ring (3) with Renolit HLT2 or equivalent.
4. Install O-ring (3) over adapter (4).
5. Liberally apply anti-seize compound to threads on adapter (4).
6. Install desiccant canisters (1) onto manifold by screwing clockwise onto male thread of adapter (4).

CAUTION

DO NOT OVER-TIGHTEN DESICCANT CANISTER. DO NOT USE STRAP WRENCH TO INSTALL DESICCANT CANISTER. FAILURE TO COMPLY MAY RESULT IN DAMAGE TO CANISTER.

7. Install desiccant canister (1) fully-threaded onto adapter (4) and gasket makes contact, turn an additional 1/4-turn.
8. Repeat procedure for second canister.
9. Restore power to Air Supply Unit.

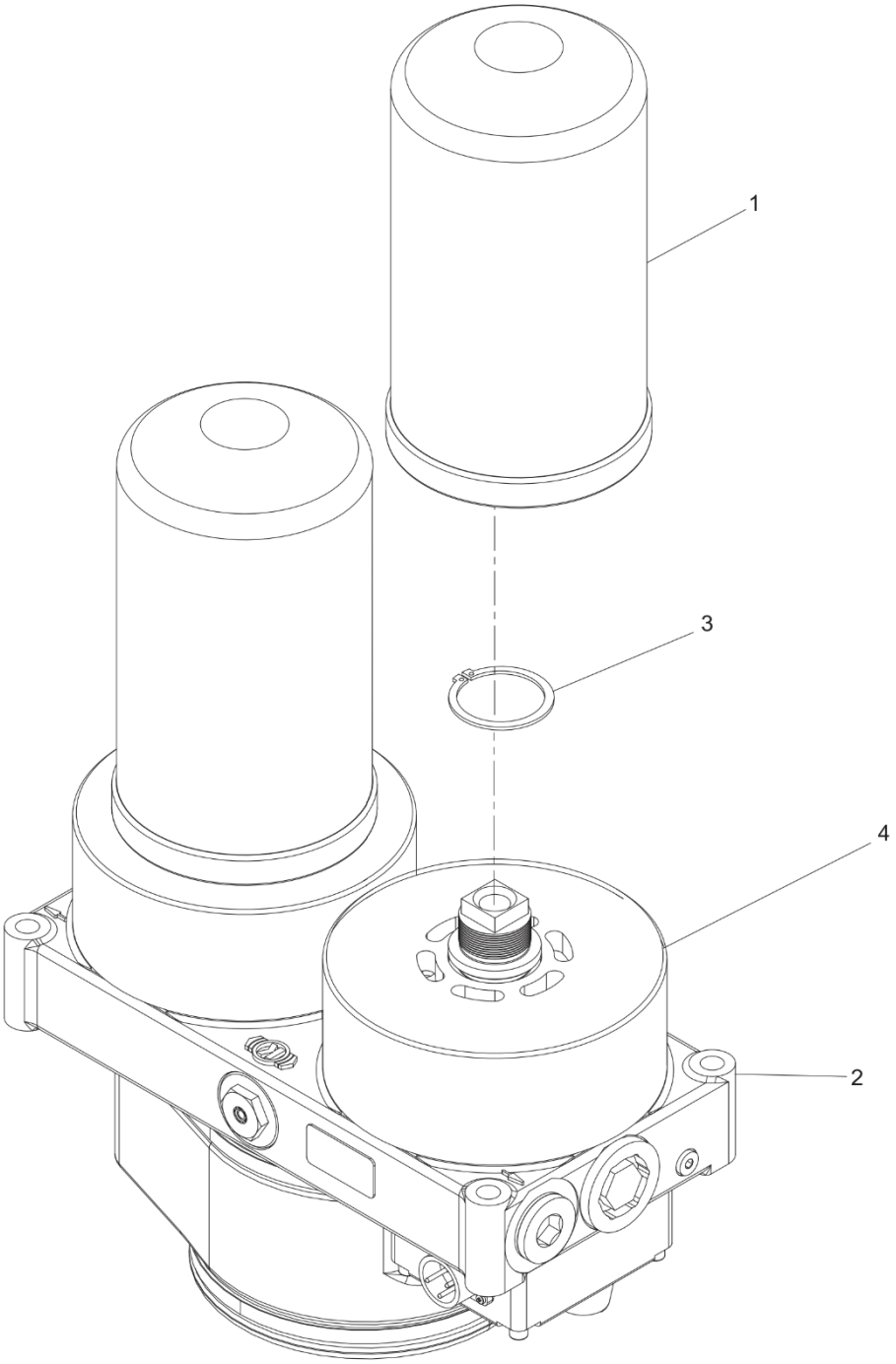

Figure 6-5: Replace Desiccant Canisters

6.3.6 Drain ASU Cooler

Equipment Conditions:

- Wheels chocked
- Parking Brakes applied
- Turn off power to 208 Vac Air Supply Unit at circuit breaker

Tools and Materials Needed:

- Torque wrench, 30 ft-lbs
- Renolit HLT2-KB grease
- Container for draining water
- Sealing ring, P/N 453835, qty 1

1. Place suitable container under cooler (3).
2. Unscrew the screw plug (1) plus sealing ring (2) from the tapping at the bottom edge of the cooler, see Figure 6-6. Allow moisture to drain completely from cooler (3).
3. Clean threads of plug (1), apply a light film of Renolit HLT2-KB grease to threads, and install plug and new sealing ring (2) in cooler (3) and torque to 30 ft-lbs.
4. Reapply power to ASU at circuit breaker.

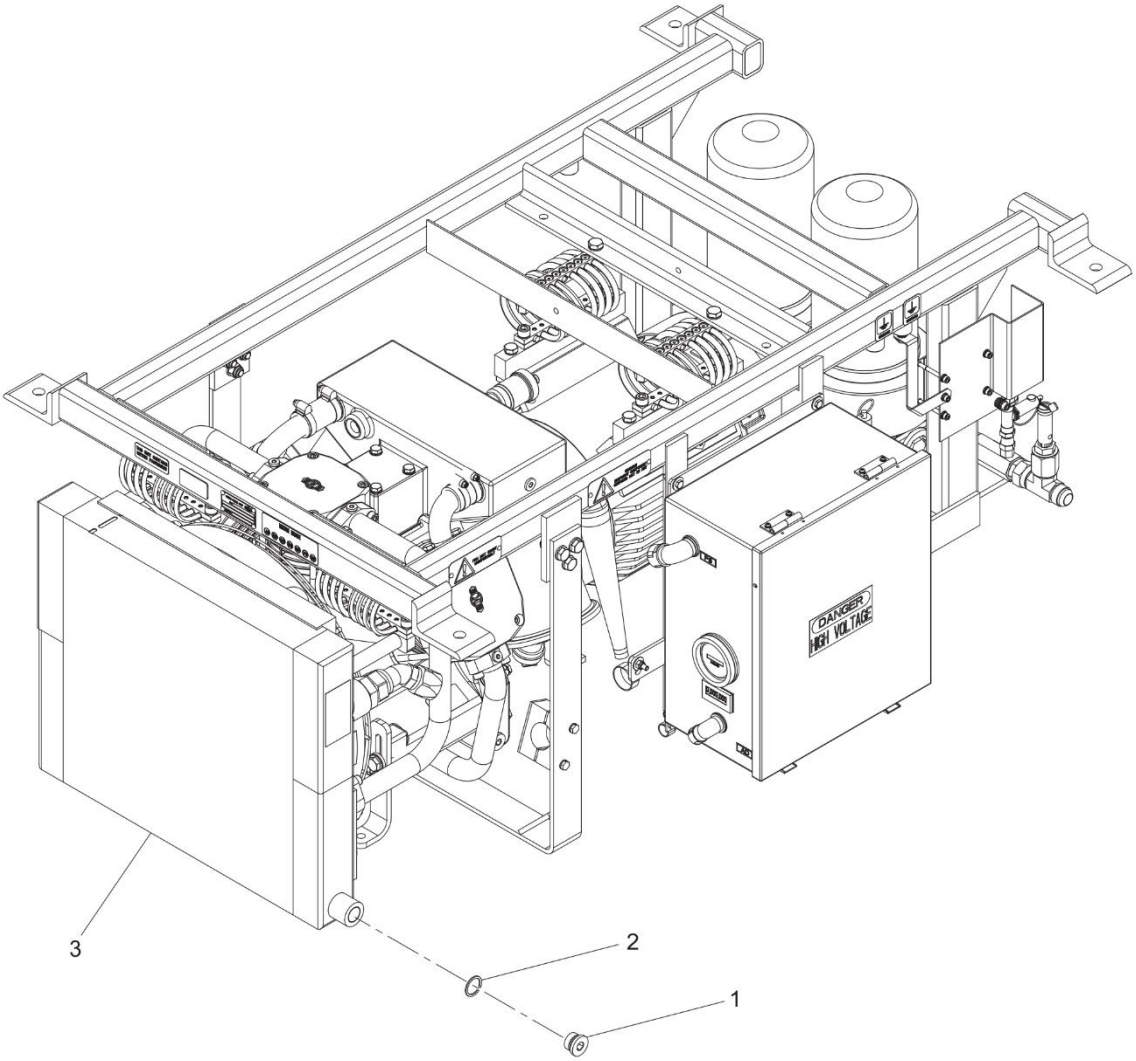

Figure 6-6: Drain Air Cooler

6.3.7 Replace Motor Truck BCU Pressure Transducers (BCT, CVT, LWT)

Equipment Conditions:

- Wheels chocked
- Parking Brakes applied
- Cut out MRCO and PBMRCO

Tools and Materials Needed:

- Open end wrench or crowfoot wrench
- Torque wrench, 17 ft-lbs
- Torque marker

1. Open BCU enclosure, see Figure 6-7.
2. Remove electrical connector from pressure transducer (1).
3. Using an open end wrench or crowfoot wrench, turn pressure transducer (1) counterclockwise and remove from manifold (2).
4. Install new pressure transducer (1) into manifold (2) port, torque to 17 ± 1.7 ft-lbs. Apply torque mark.
5. Cut in MRCO and PBMRCO.
6. Listen for leaks. If leaks are found, remove pressure transducer (1) and ensure pre-installed sealing ring is not damaged. If damaged, use a new pressure transducer and reinstall.

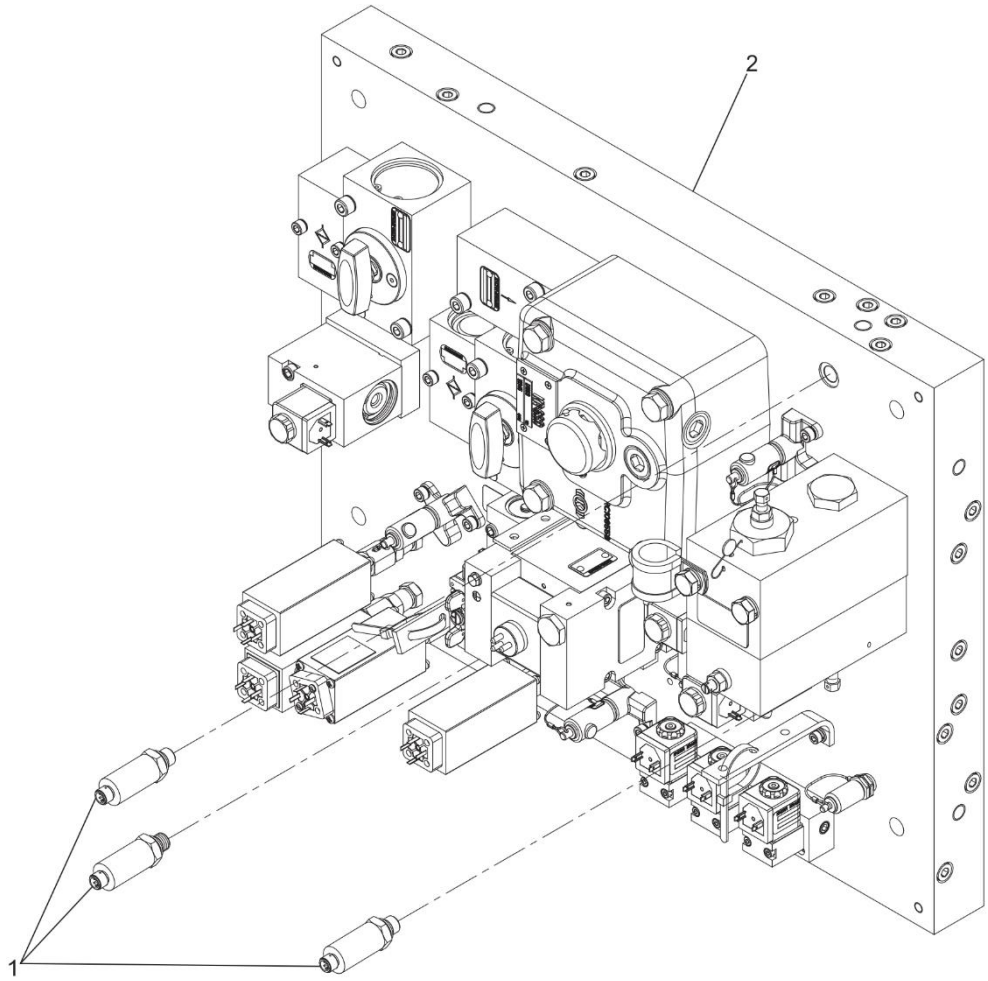

Figure 6-7: Replace Motor Truck Pressure Transducers

6.3.8 Replace Center Truck BCU Pressure Transducers (BCT, CVT, LWT, MRT)

Equipment Conditions:

- Wheels chocked
- Parking Brakes applied
- Cut out MRCO

Tools and Materials Needed:

- Open end wrench or crowfoot wrench
- Torque wrench, 17 ft-lbs.
- Torque Marker

1. Open BCU enclosure.
2. Remove electrical connector from pressure transducer (1), see Figure 6-8.
3. Using an open end wrench or crowfoot wrench, turn pressure transducer (1) counterclockwise and remove from manifold (2).
4. Install pressure transducer (1) into manifold (2) port, torque to 17 ± 1.7 ft-lbs. Apply torque mark.
5. Cut in MRCO.
6. Listen for leaks. If leaks are found, remove pressure transducer (1) and ensure pre-installed sealing ring is not damaged. If damaged, use a new pressure transducer and reinstall.

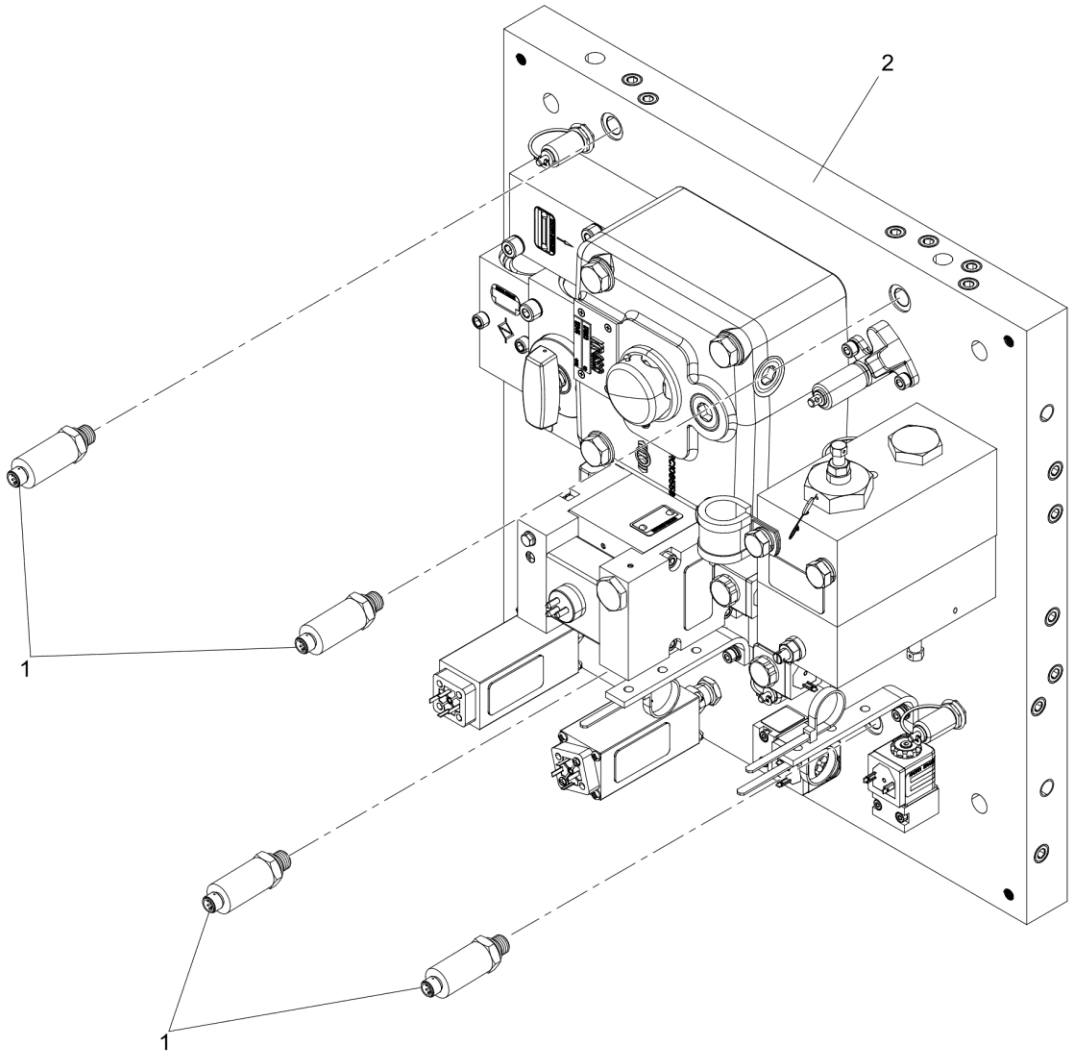

Figure 6-8: Replace Center Truck Pressure Transducers

6.3.9 Replace Brake Disc

Equipment Conditions:

- Wheels chocked
- Parking Brakes applied
- Adjacent wheel removed

Tools and Materials Needed:

- Torque wrench, 5-10 ft-lbs.
- Torque wrench, 18-52 ft-lbs.
- Torque wrench, 124 ft-lbs.
- Torque wrench, 200 ft-lbs.
- Torque wrench, 406 ft-lbs.
- Support device
- Molykote D 321 R
- Hydraulic fluid HLPD 32
- Torque stripe lacquer
- Sitting bolt kit, p/n ii87229/KIT
- Connecting parts kit, p/n ii86772/KIT
- Screw plug, p/n C150514
- Sealing ring, p/n 453800

WARNING

WEIGHT OF FRICTION RING WITH HUB IS APPROXIMATELY 198 LB. A SUPPORT DEVICE SUCH AS A LIFT MUST BE USED TO REMOVE BRAKE DISC FROM AXLE OR INJURY WILL OCCUR.

1. Place lift or support under friction ring (3), see Figure 6-9.
2. Remove two nuts (7) from sitting bolts (5) attaching friction rings (3). Discard nuts and sitting bolts.
3. Remove twelve hex head bolts (1), twenty-four spring washers (9), and twelve locknuts (10). Discard the twelve hex head bolts (1), twenty-four spring washers (9), and twelve locknuts (10).
4. Remove clamping ring (8).

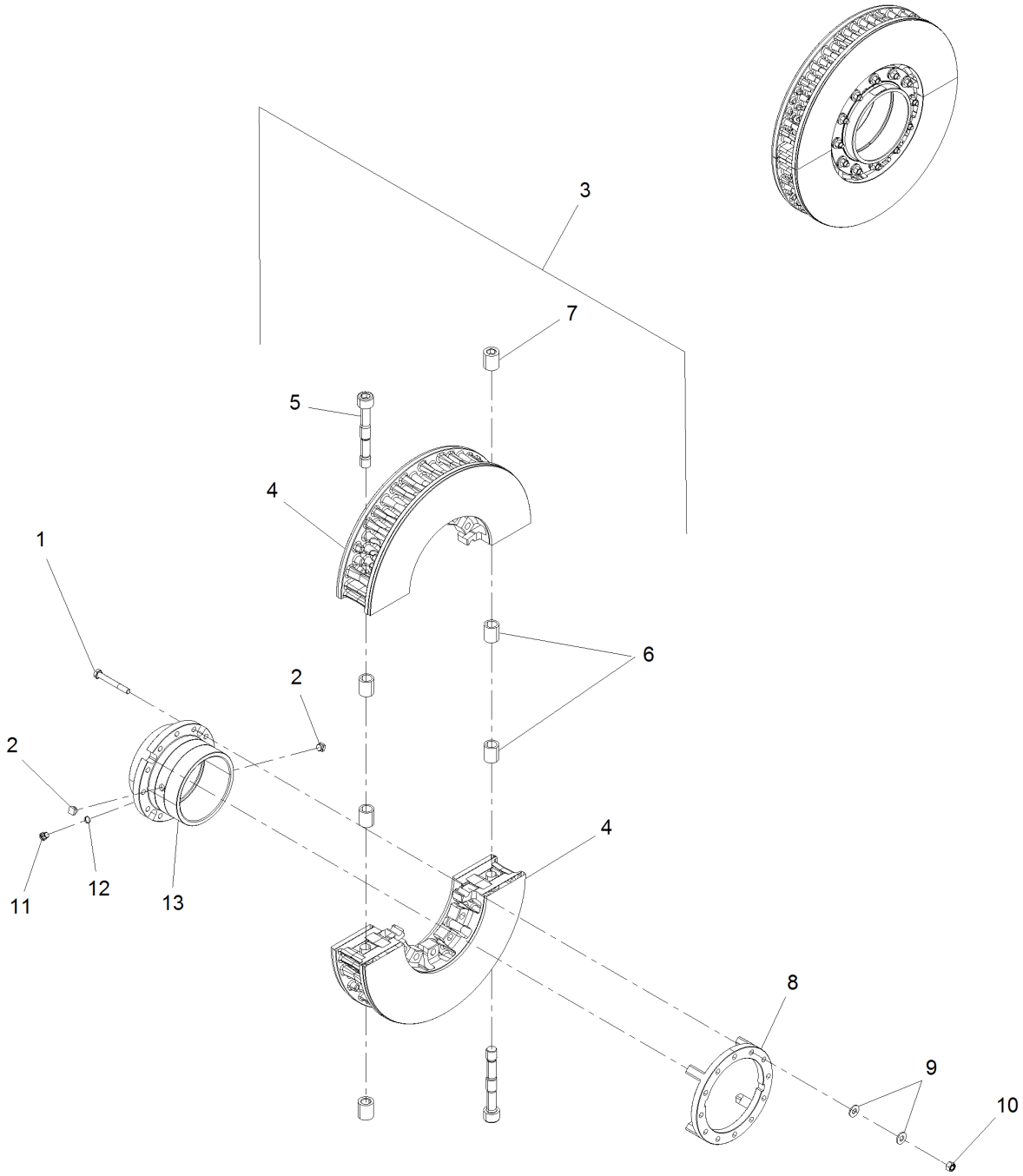

Figure 6-9: Replace Brake Discs

Table 6-1. Brake Disc Parts List

Item Number	Description	Units per Assembly
1	HEX-HEAD BOLT	12
2	PIN	2
3	FRICTION DISC	1
4	FRIC.DISC SEGMENT	2
5	SITTING BOLT	2
6	BUSH	4
7	NUT	2
8	CLAMPING RING	1
9	SPRING WASHER	24
10	LOCK-NUT	12
11	SCREW PLUG	1
12	SEALING RING	1
13	HUB	1

5. Remove pins (2), friction rings (4) and bushings (6) from hub (13). Discard pins (2) and bushings (6).

6. Remove and discard screw plug (11) and sealing ring (12) from hub (13).

CAUTION

MATING SURFACES OF SCREW HEADS, SPRING WASHERS, SLEEVES AND NUTS ON HUBS AND CLAMPING RINGS MUST ALL BE EVEN, CLEAN AND METALLICALLY BRIGHT. IN PARTICULAR, THEY MUST NOT REVEAL ANY INDENTATIONS, BURRS, DIRT, OLD MOLYKOTE, RUST, ANTI-CORROSIVES OR PAINT. IF NECESSARY, CAUTIOUSLY LEVEL AND CLEAN THE APPROPRIATE SURFACES. LOSS OF FUNCTIONALITY, DAMAGE TO THE VEHICLE, AND DERAILMENT DUE TO LOSS OF FRICTION RINGS MAY OCCUR IF FASTENING HARDWARE IS FAULTY.

7. Inspect contact surfaces of twelve new hex head bolts (1), twenty-four new spring washers (9), and twelve new locknuts (10).

8. Inspect hub (13) and clamping ring (8) for damage. Exchange clamping ring if damage is found, such as cracks. If hub is damaged, see Carbuilder procedures for replacing hub.

9. Coat contact surfaces of hub (13) and clamping ring (8) with just enough Molykote D 321 R to hide metal surface.

10. Apply hydraulic fluid to threads of new screw plug (11).

11. Install new sealing ring (12) on screw plug (11).
12. Install screw plug (11) in hub and torque to 7.4 ft-lbs.
13. Apply hydraulic fluid HLPD 32 to threads of twelve new hex head bolts (1), nuts (10), bushings (6), sitting bolts (5) threads and shank.
14. Place new friction ring (4) half on lift or support.
15. Install four bushings (6) in the friction rings (4) and assemble the friction rings together.
16. Install the sitting bolts (5) and nuts (7) attaching the two friction rings (1) and hand tighten the attaching hardware.
17. Install the hub (13) and align the 12 holes with friction ring holes.
18. Insert two pins (2) with flattened ends of pins projecting from hub (13) in holes in hub (13) until fully seated.
19. Align clamping ring (8) with holes on friction ring (4) and insert twelve new hex head bolts (1) with twenty-four new spring washers (9) through friction ring (4) and hub (13) in the following order: hex head bolt, 2 spring washers (concave surface towards clamping ring), clamping ring, friction ring, hub and hand tighten.
20. Torque two nuts (7) to 200 ft-lbs.
21. Torque two nuts (7) to 406 ft-lbs (± 20 ft-lbs). Apply torque stripe.
22. Install twelve new locknuts (10) onto hex head bolts (1). Holding hex head bolts (1) stationary using a wrench, tighten locknuts (10) to an intermediate lubricated torque of 26 ft-lbs. Use pattern: 1 – 5 – 9 – 2 – 6 – 10 – 3 – 7 – 11 – 4 – 8 – 12, see Figure 6-10.
23. Tighten locknuts (10) to a final lubricated torque of 59 ft-lbs (± 3 ft-lbs) in the same pattern as shown in the previous step. Apply torque stripe to locknuts.
24. Measure the wobble (runout of friction surface) in the middle of the friction surface of the fully assembled disc, see Figure 6-10a. If wobble is greater than 0.3 mm, remove the friction ring, turn by 180° and re-install in the manner described above. Test again for wobble. If wobble persists, check installation of hub.

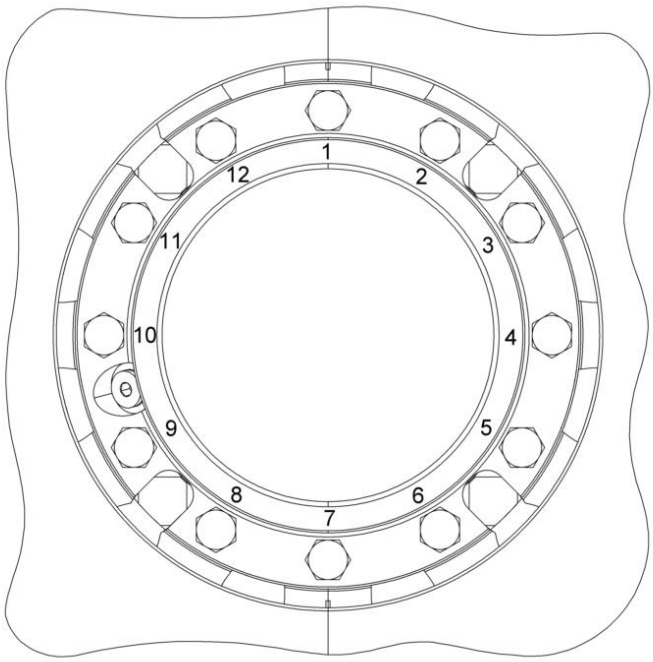

Figure 6-10: Friction Ring Locknuts Tightening Sequence

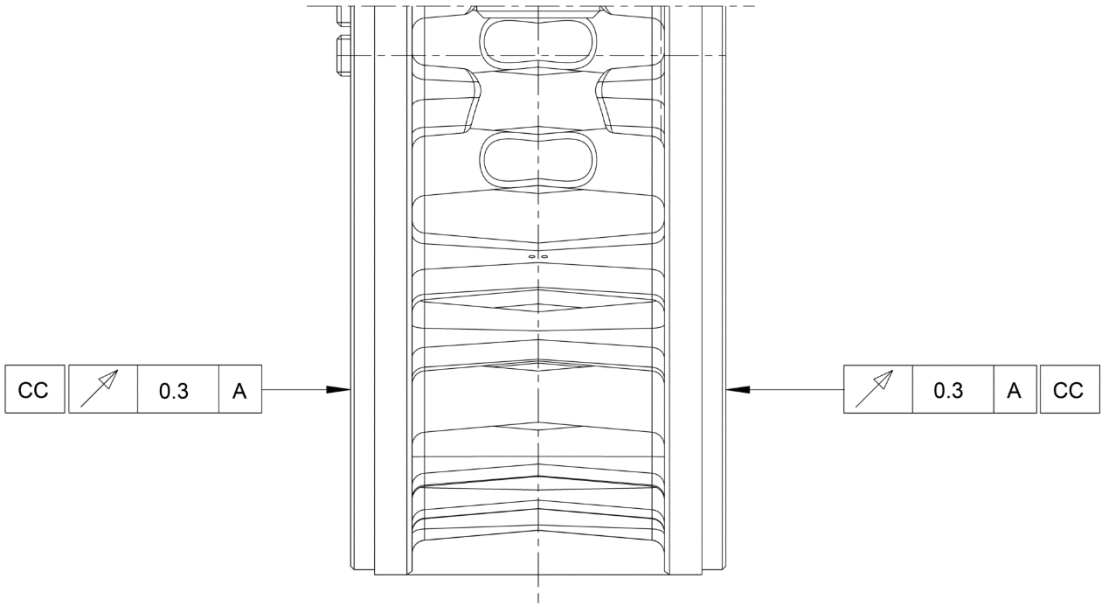

Figure 6-10a: Measuring Wobble of Friction Ring

6.3.10 Replace MT BCU Pressure Switches (PBA, PBR, BCA, BCR)

Equipment Conditions:

- Wheels chocked
- Parking Brakes applied
- Cut out MRCO on applicable

Tools and Materials Needed:

- Loctite 569
- Torque wrench, 13 ft-lbs
- Torque Marker

1. Remove electrical connector from pressure switch.
2. Remove pressure switch (1) from swivel adapter (2), see Figure 6-11.
3. Remove swivel adapter form BCU manifold and clean swivel adapter threads.
4. Apply Loctite 569 to swivel adapter threads (2) and secure to manifold. Tighten 2 to 3 turns from finger tight. Apply torque mark.
5. Secure pressure switch to swivel adapter. Torque to 13 + 1.3 ft-lbs. Apply torque mark.
6. Cut in MRCO on applicable BCU.
7. Listen for leaks. If leaks are found, remove and reinstall adapter and pressure switch.
8. Reconnect electrical connector to pressure switch.

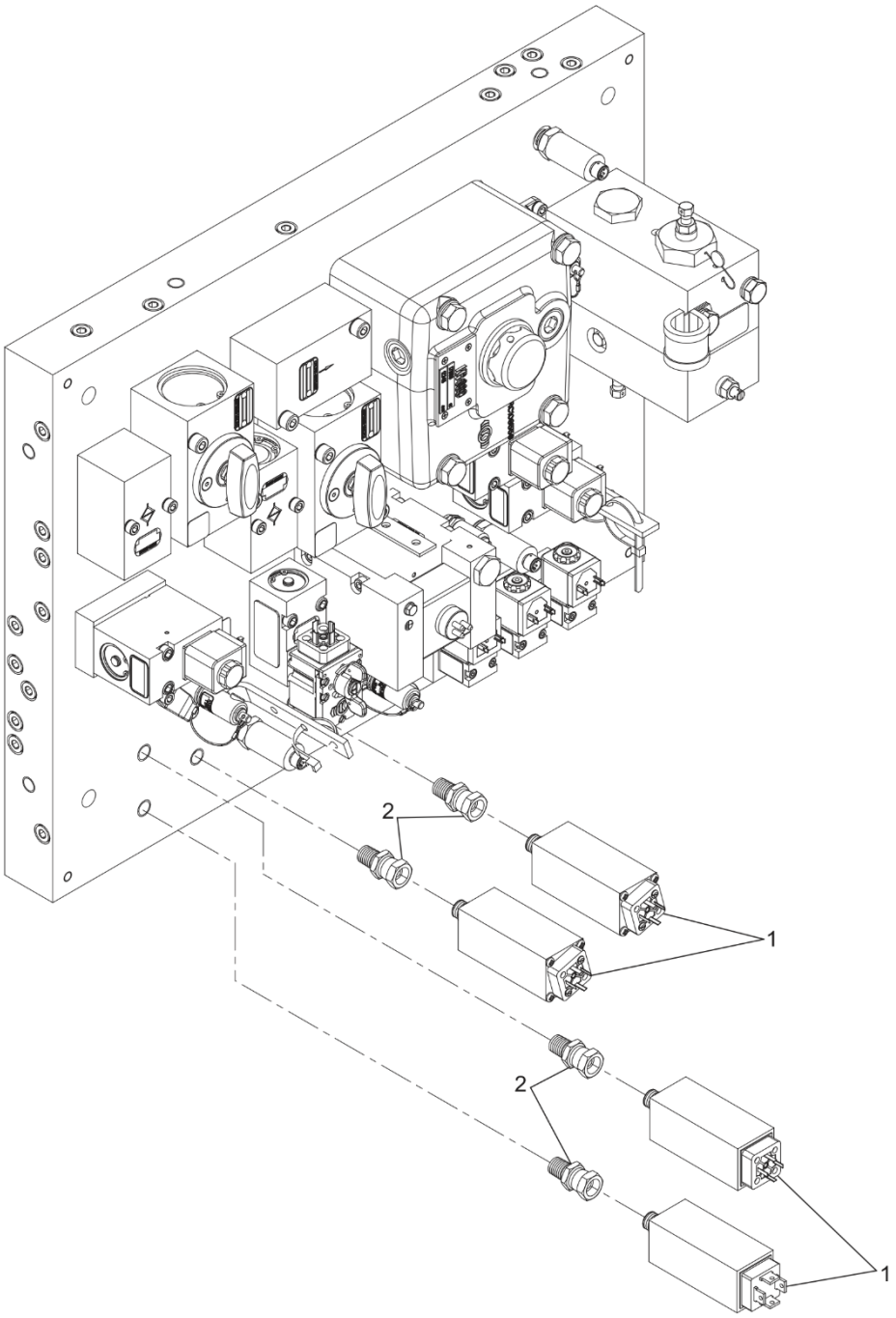

Figure 6-11: Replace Pressure Switch BCU MT

6.3.11 Replace CT BCU Pressure Switches (BCR and BCA)

Equipment Conditions:

- Wheels chocked
- Parking Brakes applied
- Cut out MRCO on applicable BCU

Tools and Materials Needed:

- Loctite 569
- Torque wrench, 13 ft-lbs
- Torque Marker

1. Remove electrical connector from pressure switch.
2. Remove pressure switch (1) from swivel adapter (2), see Figure 6-12.
3. Remove swivel adapter (2) form BCU manifold and clean swivel adapter threads.
4. Apply Loctite 569 to swivel adapter threads (2) and secure to manifold. Tighten 2 to 3 turns from finger tight. Apply torque mark.
5. Secure pressure switch to swivel adapter. Torque to 13 + 1.3 ft-lbs. Apply torque mark.
6. Cut in MRCO on applicable BCU.
7. Listen for leaks. If leaks are found, remove and reinstall adapter and pressure switch.
8. Reconnect electrical connector to pressure switch (1).

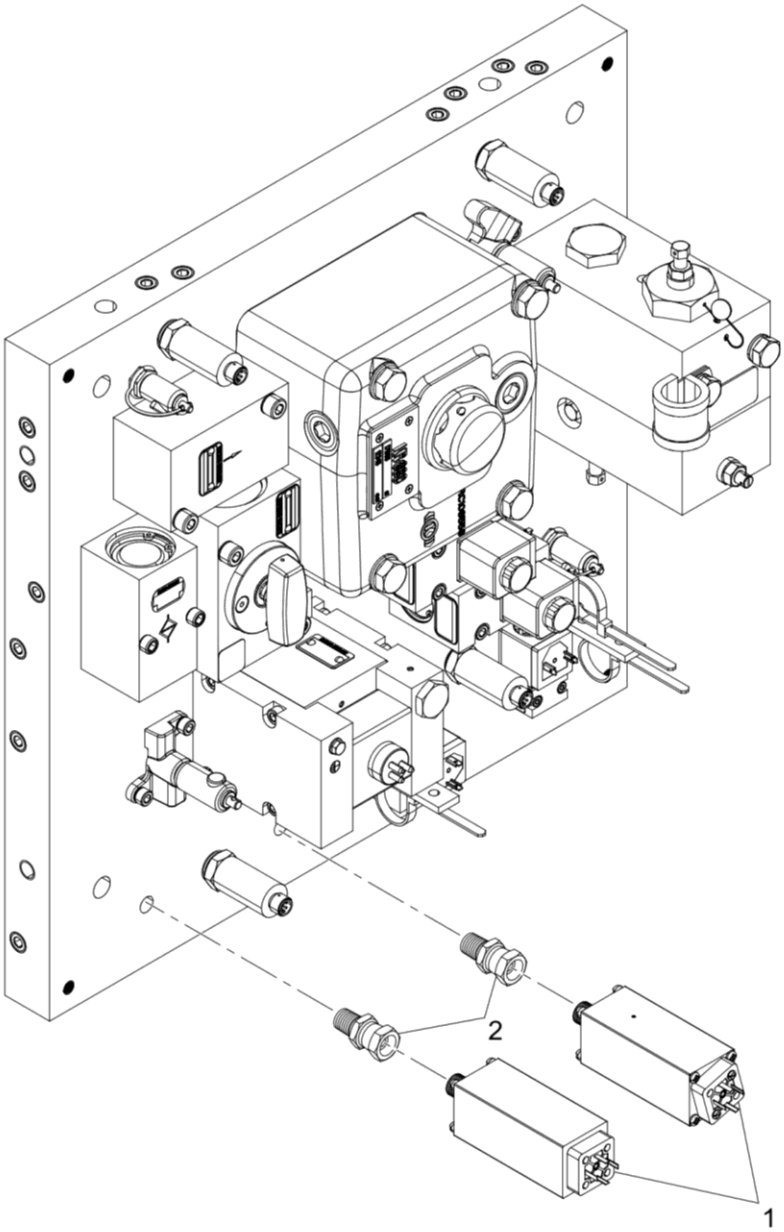

Figure 6-12: Replace Pressure Switch BCU CT

6.3.12 Replace Suspension Air Filters, Replace Filter Element

Material Required:

- Overhaul Kit, p/n STU13505, qty 1
- Cantesco leak detector

1. Remove screw plug (1) with O-ring (2), compression spring (3), and filter element (4) from housing (5), see Figure 6-13. Discard filter element, compression spring, and O-ring.

2. Insert new filter element (4), new compression spring (3), and screw plug (1) with new O-ring (2) in housing (5). Tighten screw plug securely.

3. Cut in the air suspension lines. Ensure screw plug (1) does not leak. Apply soapy water solution, Cantesco leak detector or equivalent, around screw plug (1), if leaks are found, replace entire air filter.

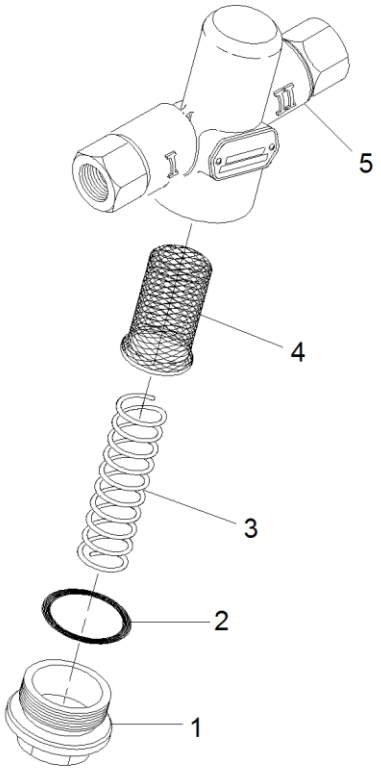

Figure 6-13: Replace Suspension Air Filter Element

6.3.13 Replace ECU Circuit Boards

Equipment Conditions:

- Wheels chocked
- Parking Brakes applied
- Power to ECU Secured at Circuit Breaker Panel

Tools and Materials Needed:

- Circuit Board

1. Disconnect connector from front of circuit board to be replaced (1).
2. Loosen two captive thumb screws (2) and remove circuit board (1).
3. Slide new circuit board (1) into ECU (3) until seated and tighten two captive thumb screws (2) securely.
4. Connect connector to front of replaced circuit board (1).
5. Apply power to ECU at Circuit Breaker Panel.
6. If MB04B board or MB03B board was replaced, reload software as follows:

a. Connect laptop loaded with ST03A software to the MB04B board Serial port (4).

b. Run ST03A software and check software version on both MB03B and MB04B boards per ST03A user manual. If necessary, load system software on board per ST03A user manual.

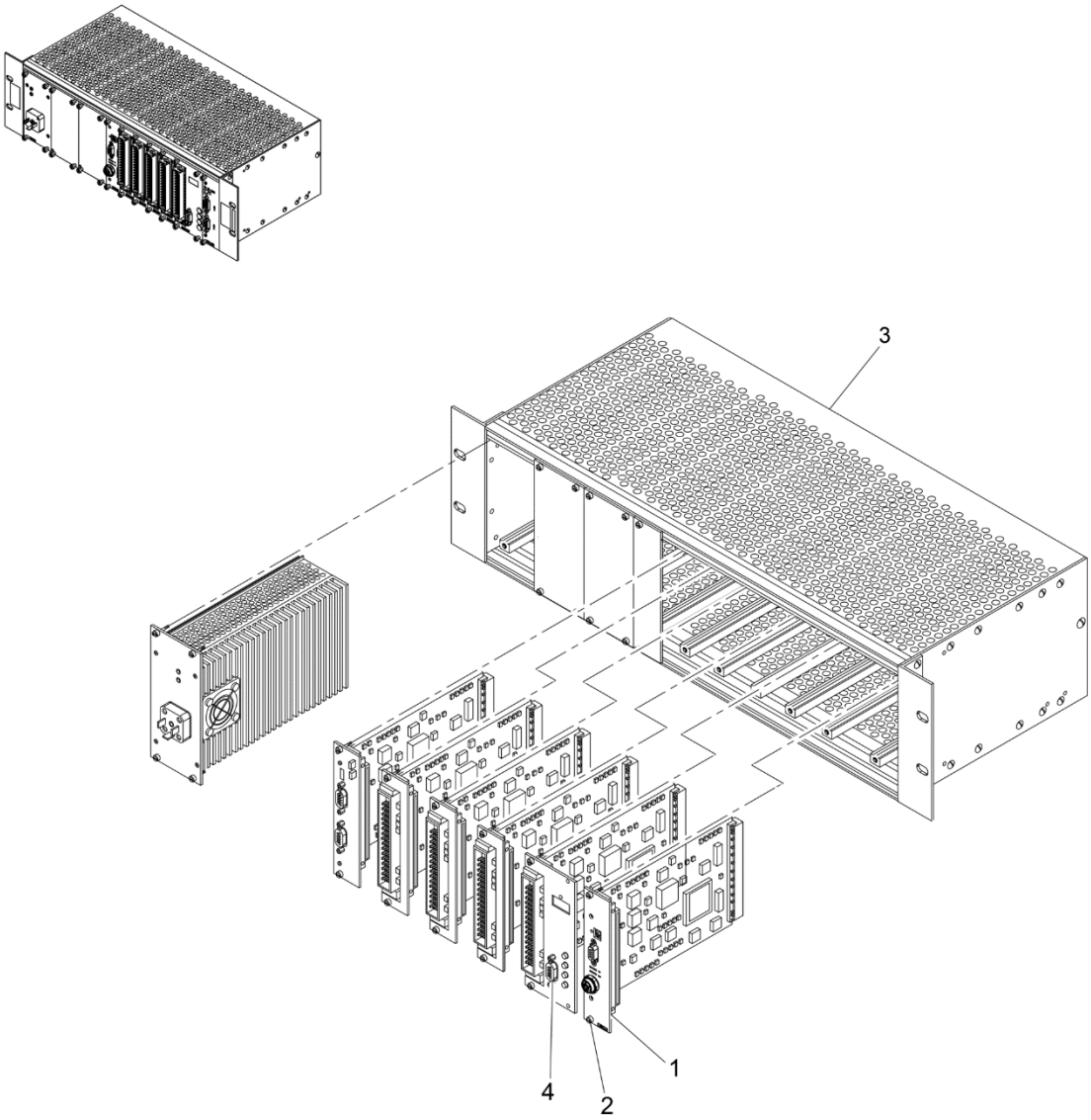

Figure 6-14: Replace ECU Circuit Boards

CHAPTER 7.0

LUBRICATION

7.1 Introduction

There are no lubrication procedures for the braking system.

THIS PAGE INTENTIONALLY LEFT BLANK

CHAPTER 8.0

COMPONENT REMOVAL AND INSTALLATION

8.1 Introduction

This chapter contains removal and installations procedures that are used when troubleshooting or inspecting any component part.

8.2 Safety Information

Some of the procedures in this section are preceded by warnings, cautions and notes regarding potential hazards in handling this equipment. All of these warnings should be carefully read and understood before proceeding, and then be followed closely while performing related tasks. The prominent warnings for this equipment are:

WARNING

BECAUSE THIS EQUIPMENT OPERATES AT LETHAL POWER LEVELS, WARNINGS AND REMINDERS ABOUT REMOVAL OF POWER, IN ACCORDANCE WITH LACMTA REGULATIONS SHOULD BE COMPLETELY UNDERSTOOD BEFORE ANY WORK IS BEGUN.

WARNING

SOME COMPONENTS MAY CONTAIN HAZARDOUS CHEMICALS, OR THEIR USE MAY BE REQUIRED IN CLEANING OR SERVICING SUCH COMPONENTS. IN THESE CASES, THE MANUFACTURER'S WARNINGS SHOULD BE CLOSELY HEEDED, AND ONLY THOSE ITEMS SPECIFICALLY AND CURRENTLY APPROVED FOR USE BY LACMTA SHOULD BE EMPLOYED, REGARDLESS OF ANY RECOMMENDED USE IN THE PROCEDURE.

WARNING

MUCH OF THE EQUIPMENT ON THIS VEHICLE IS LOCATED UNDER THE FLOOR. SPECIAL CAUTION SHOULD BE TAKEN WHEN ACCESSING OR SERVICING ITEMS IN THIS LOCATION.

WARNING

SOME COMPONENTS IN THIS EQUIPMENT ATTAIN TEMPERATURES THAT CAN CAUSE SEVERE BURNS, AND OTHERS, IF MISHANDLED, MAY CAUSE SERIOUS CUTS OR PRODUCE TOXIC FUMES OR RESIDUES. CLOSELY FOLLOWS MANUFACTURER'S WARNINGS AND RECOMMENDED PROCEDURES FOR HANDLING THESE COMPONENTS.

WARNING

SOME OF THE EQUIPMENT CONTAINS COMPONENTS UNDER SPRING TENSION THAT CAN BE HAZARDOUS IN AN UNCONTROLLED RELEASE. OTHER COMPONENTS CONTAIN FLUIDS OR GASSES UNDER PRESSURE THAT CAN READILY CAUSE PERSONAL INJURY IF IMPROPERLY RELEASED. WARNINGS AND SPECIFIC INSTRUCTIONS FOR HANDLING SUCH COMPONENTS SHOULD BE CLOSELY ADHERED TO.

WARNING

MANY EQUIPMENT ITEMS AND COMPONENTS ARE QUITE HEAVY AND MAY REQUIRE LIFTING DEVICES OR ASSISTANCE FOR THEIR SAFE HANDLING, AND ARE GENERALLY NOTED. HOWEVER, ALL EQUIPMENT THAT LOOKS HEAVY, PROBABLY IS, AND SHOULD BE TREATED ACCORDINGLY.

NOTE**:** The use of WARNING statements is necessarily limited to significant cases, so that effectiveness will not be reduced by too frequent usage. The absence of such statements does not, in any way, imply the absence of hazards which may be present anytime electrical or refrigeration equipment is activated, or when working on items with inherent hazards, such as those cited above.

8.3 Remove and Installation Procedures

8.3.1 Replace Apply and Release Magnet Valve, MT (AMV, RMV)

Equipment Conditions:

- Wheels chocked
- Parking Brakes applied
- Cut out MRCO and PBMRCO

Tools and Materials Needed:

- Standard Hand Tools
- Torque Wrench, 22 in Lbs.
- Torque Stripe, Gold and Silver
- Loctite 596
- Renolit HLT2-KB grease
- O-rings, p/n OR006000, Qty 4
- O-rings, p/n 8970701464, Qty 6
- Schnorr washer, p/n 805665/6, Qty, 10

Removal

1. Disconnect electrical connector from precontrol valve solenoids (1) by unscrewing set screw, then removing connector, see Figure 8-1.
2. Remove two screws (2) and lockwashers (3) from precontrol valve solenoid (1). Discard lockwashers (3).
3. Remove and discard two O-rings (4).
4. Remove two screws (5) and lockwashers (6) from precontrol valve solenoid (1). Discard lockwashers (6).
5. Remove and discard two O-rings (7).
6. Remove two screws (8) and lockwashers (9) from precontrol valve solenoid (1). Discard lockwashers (9).
7. Remove and discard two O-rings (10).
8. Remove four screws (11) and lockwashers (12) from adapter plate (13). Remove adapter plate from manifold (14). Discard lockwashers (13).
9. Remove and discard four O-rings (15).
10. Remove plug (16) from adapter plate (13).
11. Remove wasp excluder (17) from adapter plate (13).

Installation

1. Apply Loctite 569 to plug (16) and install in adapter plate (13). Tighten 2-3 turns from finger tight.
2. Install wasp excluder (17) in adapter plate (13). Tighten securely.
3. Lightly lubricate four new O-rings (15) with a thin film of grease.
4. Install new O-rings (15) on adapter plate (13).
5. Apply anti-seize to threads of four screws (11).
6. Install adapter plate (13) on manifold (14) and secure with four screws (11) and new lockwashers (12). Torque screws to 22 in-lb ± 2.2 and apply torque stripe.
7. Lightly lubricate two new O-rings (10) with a thin film of grease.
8. Install new O-rings (10) on adapter plate (13).
9. Apply anti-seize to threads of two screws (8).

10. Install precontrol valve solenoid (1) on manifold (13) and secure with two screws (8) and new lockwashers (9). Torque screws to 22 in-lb ± 2.2 in-lb and apply torque stripe.

11. Lightly lubricate two new O-rings (7) with a thin film of grease.

12. Install new O-rings (7) on adapter plate (10).

13. Apply anti-seize to threads of two screws (5).

14. Install precontrol valve solenoid (1) on manifold (10) and secure with two screws (5) and new lockwashers (6). Torque screws to 22 in-lb ± 2.2 in-lb and apply torque stripe.

15. Apply anti-seize to threads of two screws (2).

16. Install precontrol valve solenoid (1) on manifold (10) and secure with two screws (2) and new lockwashers (3). Torque screws to 22 in-lb ± 2.2 in-lb and apply torque stripe.

17. Connect electrical connector to magnet valve (3) and secure with set screw.

18. Restore auxiliary panel to operational condition and check for leaks.

19. Install connector tape as follows:

- AMV = silver striped connector
- RMV (center) = no stripe on connector
- RMV (right) = gold striped connector

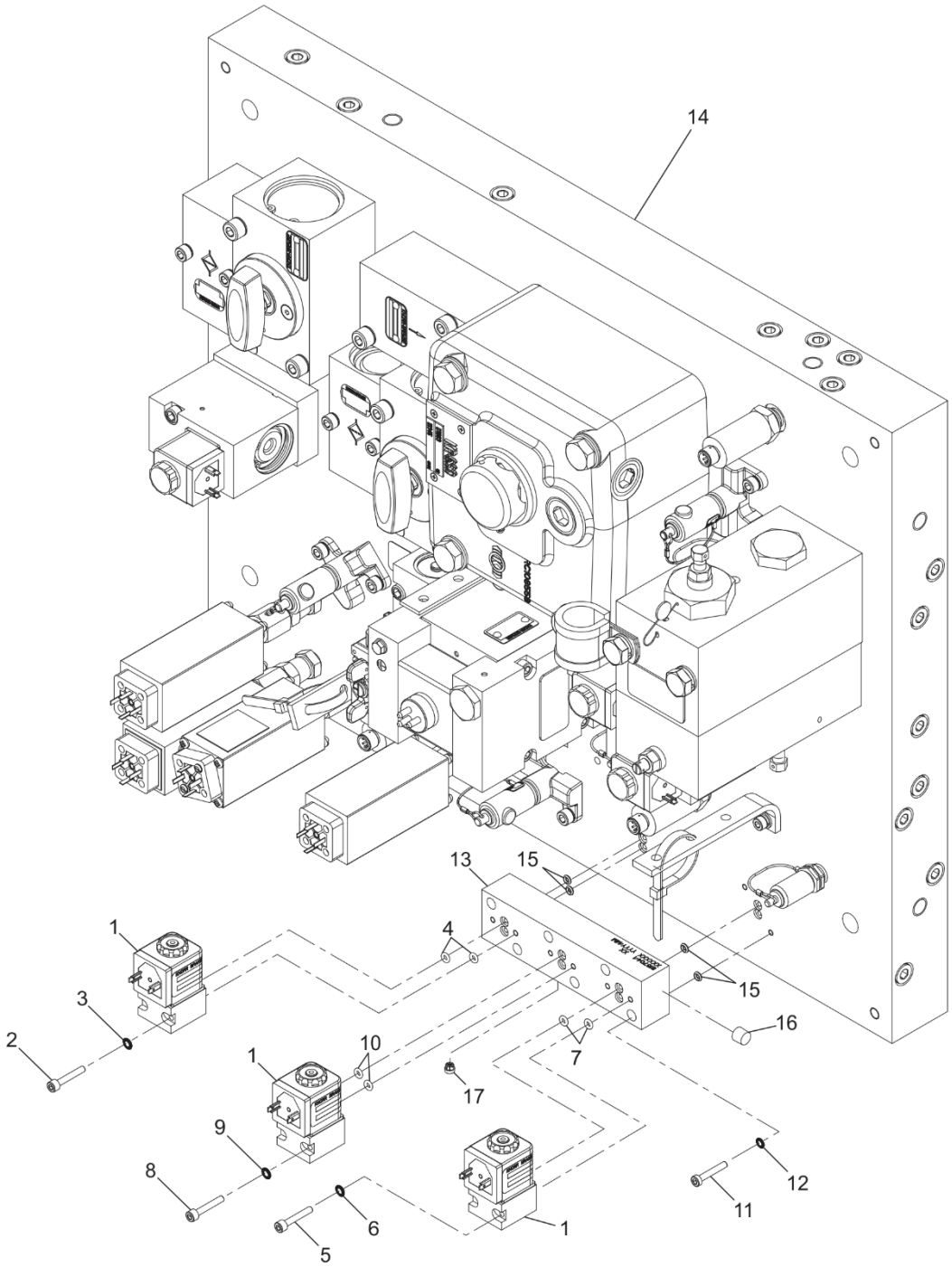

Figure 8-1: Replace Apply and Release Magnet Valve, MT BCU

8.3.2 Replace Apply and Release Magnet Valve, CT (AMV, RMV)

Equipment Conditions:

- Wheels chocked
- Parking Brakes applied
- Cut out MRCO

Tools and Materials Needed:

- Standard hand tools
- Torque Wrench, 22 in-lbs
- Torque Stripe
- Anti-Seize
- Renolit HLT2-KB grease
- O-ring, p/n 8970701464, qty 4
- Lockwasher, p/n 805665/6, qty 4

Removal

1. Disconnect electrical connector from precontrol valve solenoids (1) by unscrewing set screw, then removing connector, see Figure 8-2.
2. Remove two screws (2) and lockwashers (3) from precontrol valve solenoid (1). Discard lockwashers (3).
3. Remove and discard two O-rings (4).
4. Remove two screws (5) and lockwashers (6) from precontrol valve solenoid (1). Discard lockwashers (6).
5. Remove and discard two O-rings (7).

Installation

1. Lightly lubricate two new O-rings (7) with a thin film of grease and insert into manifold (8).
2. Apply anti-seize to threads of two screws (5).
3. Install precontrol valve solenoid (1) on manifold (8) and secure with two screws (5) and new lockwashers (6). Torque screws to 22 ± 2.2 in-lb and apply torque stripe.
4. Lightly lubricate two new O-rings (4) with a thin film of grease and insert into manifold (8).

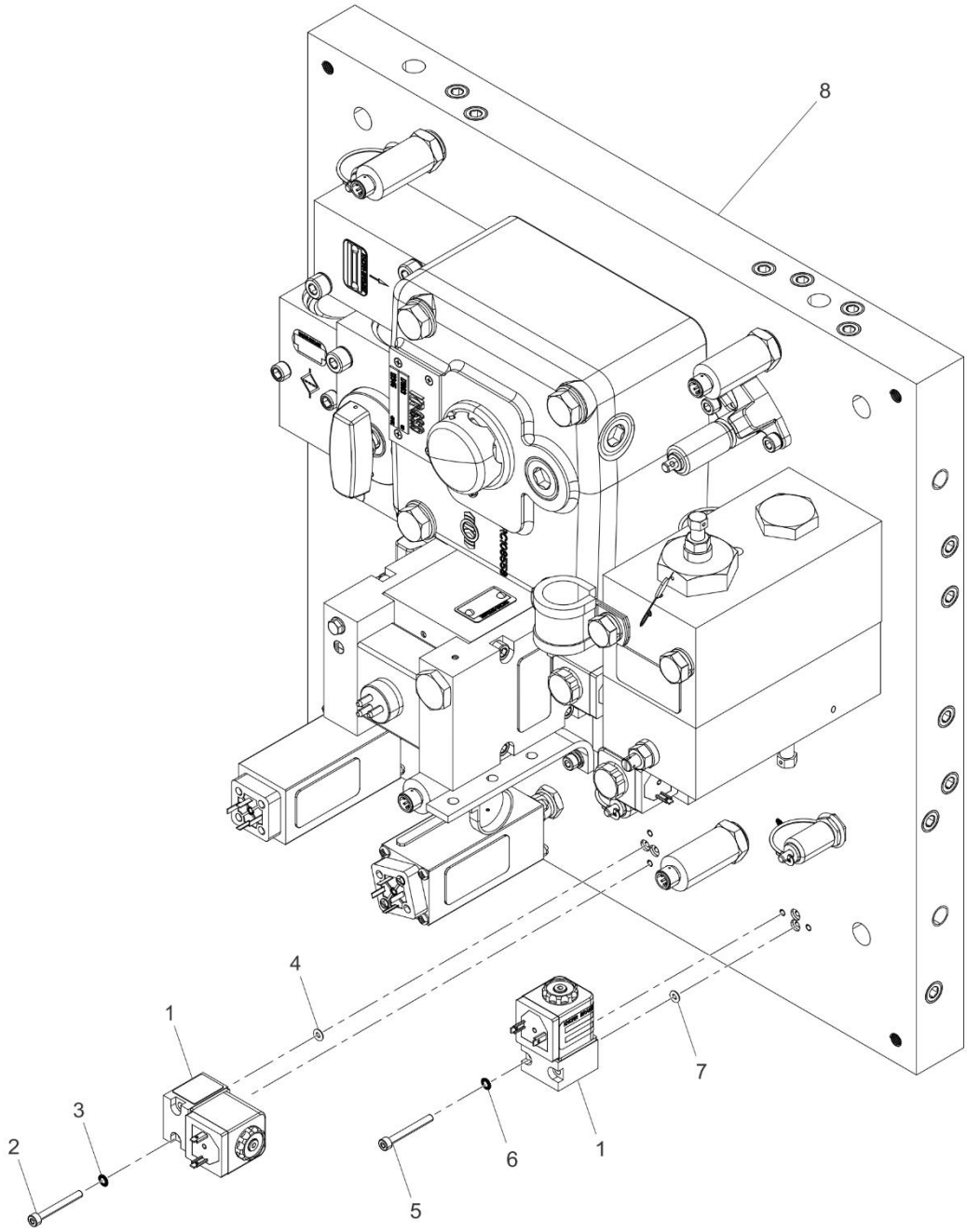

Figure 8-2: Replace Apply and Release Magnet Valve, CT BCU

5. Apply anti-seize to threads of two screws (2).
6. Install precontrol valve solenoid (1) on manifold (8) and secure with two screws (2) and new lockwashers (3). Torque screws to 22 ± 2.2 in-lb and apply torque stripe.
7. Connect electrical connector to precontrol valve solenoids (1) and secure with set screw.
8. Restore auxiliary panel to operational condition and check for leaks.
9. Install connector tape as follows:

- AMV = silver striped connector
- RMV = gold striped connector

8.3.3 Replace Test Points (TP-CV1, TP-CV3, TP-CV4, TP-MR)

Equipment Conditions:

- Wheels chocked
- Parking Brakes applied
- Cut out MRCO and PMMRCO (MT) Valves

Tools and Materials Needed:

- Standard hand tools
- Loctite 569

NOTE: This procedure applies to the motor truck BCU and the center truck BCU, both BCU graphics are shown.

Removal

1. Open BCU enclosure.
2. Using an open end wrench or crowfoot wrench, remove test point (1) by turning counterclockwise, see Figure 8-3 and Figure 8-4.

Installation

1. Apply Loctite 569 to test point threads (1).
2. Install new test point (1) onto BCU manifold (2). Tighten 2-3 turns from finger tight.
3. Cut in MRCO and PMMRCO (MT) BCU.
4. Listen for leaks. If leaks are found, remove test point (1), clean threads, reapply Loctite 569 and reinstall test point (1).
5. Close and secure BCU enclosure.

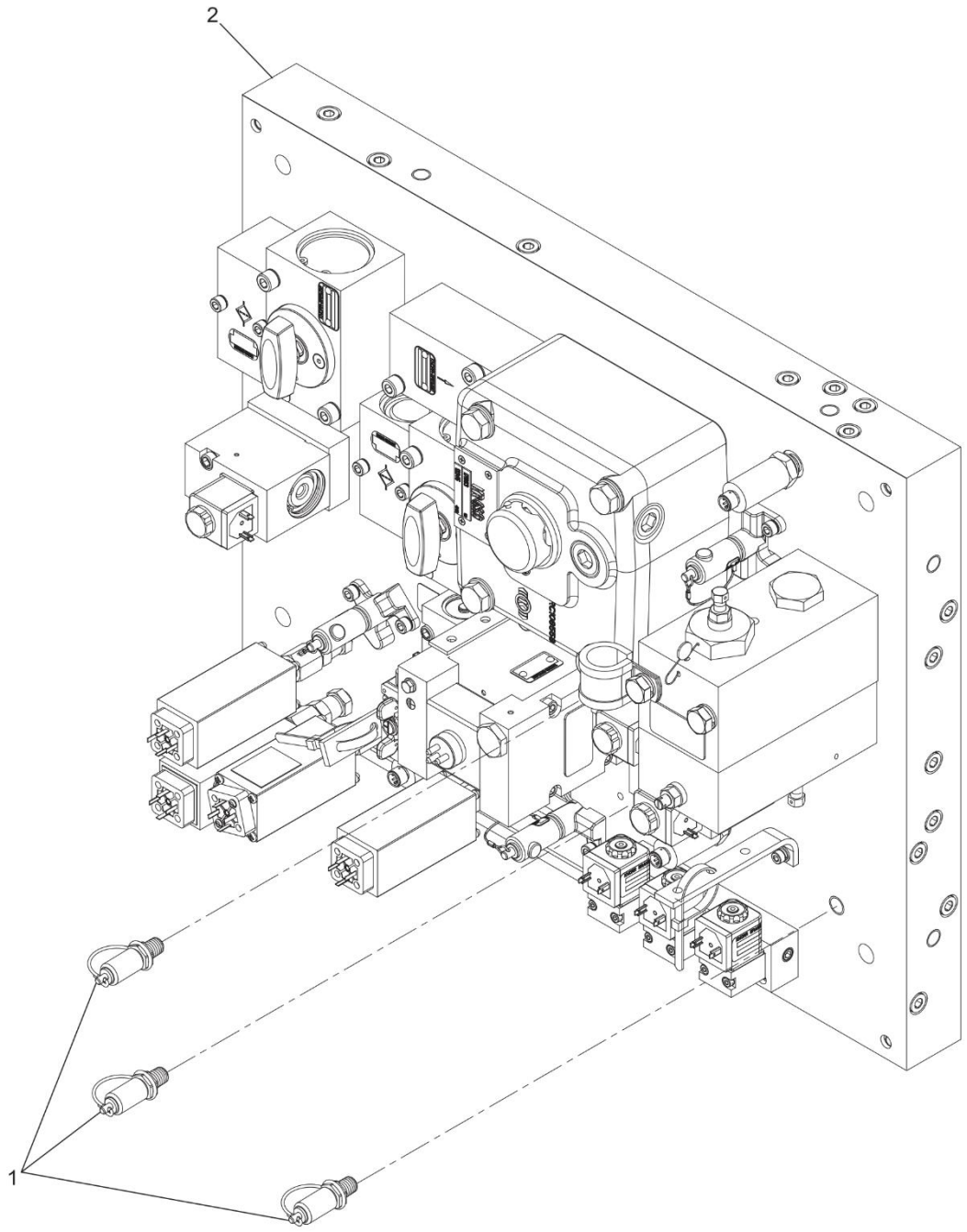

Figure 8-3: Test Points, MT BCU

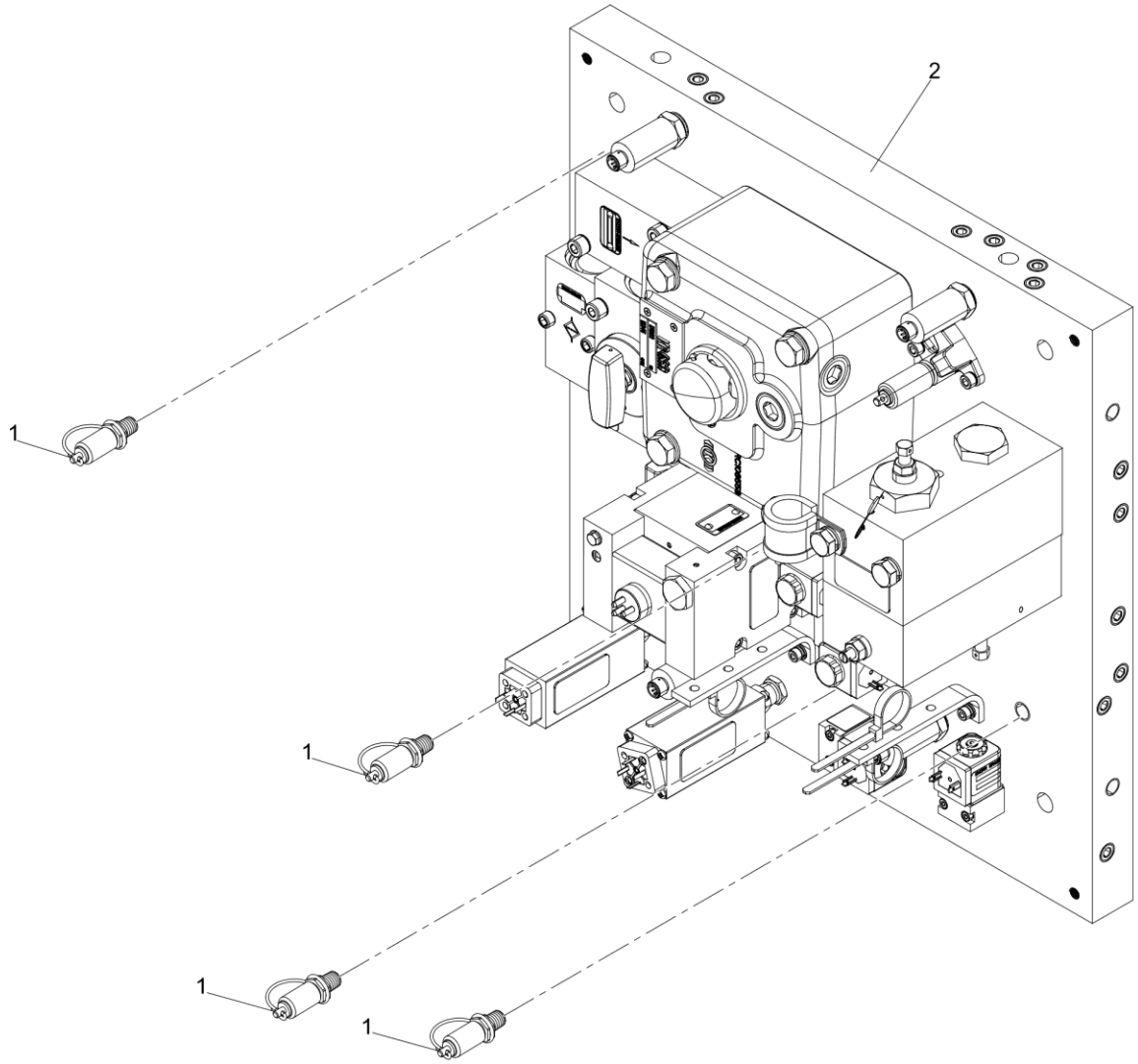

Figure 8-4: Test Points, CT BCU

8.3.4 Replace Flange Mounted Test Points (TP-PB, TP-TP-BC, TP-LW, TP-MR)

Equipment Conditions:

- Wheels chocked
- Parking Brakes applied
- Cut out MRCO and PBMROC (MT BCU)

Tools and Materials Needed:

- Standard hand tools
- Renolit HLT2-KB grease
- Anti-seize W105374
- Torque wrench, 6.3 ft-lbs
- O-rings included with valve
- Lockwasher, p/n 805665/3, qty. 2
- Torque stripe

NOTE: This procedure applies to the motor truck BCU and the center truck BCU, both BCU graphics are shown.

Removal

1. Remove two screws (1), two lockwashers (2), and test point (3) from BCU manifold (5), see Figure 8-5 and Figure 8-6.
2. Remove and discard two O-rings (4) and lockwashers (2) from test point (3).

Installation

1. Apply a light coat of Renolit HLT2-KB grease to two new O-rings (4) and install into test point (3).
2. Apply anti-seize to threads of two screws (1).
3. Align locating hole and install test point (3) onto BCU manifold (5).
4. Secure test point (3) with two new lock washers (2) and two screws (1). Tighten screws to 6.3 ± 0.6 ft-lbs. Apply torque stripe.
5. Cut in MRCO and PBMRCO (MT BCU).
6. Listen for leaks. If leaks are found, remove test point (3) and ensure O-rings (4) are seated properly and reinstall test point.

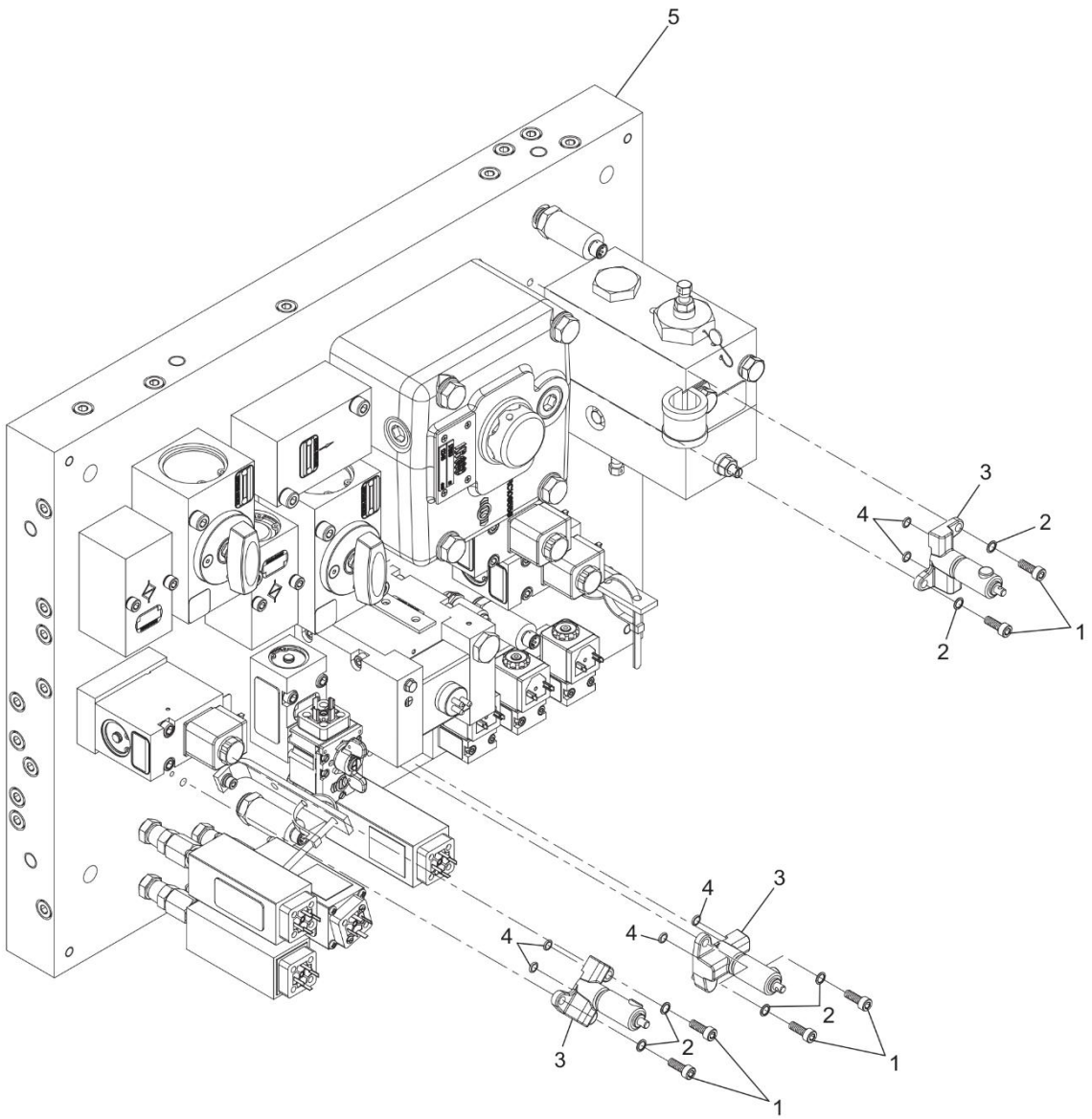

Figure 8-5: Flange Mounted Test Point, MT BCU

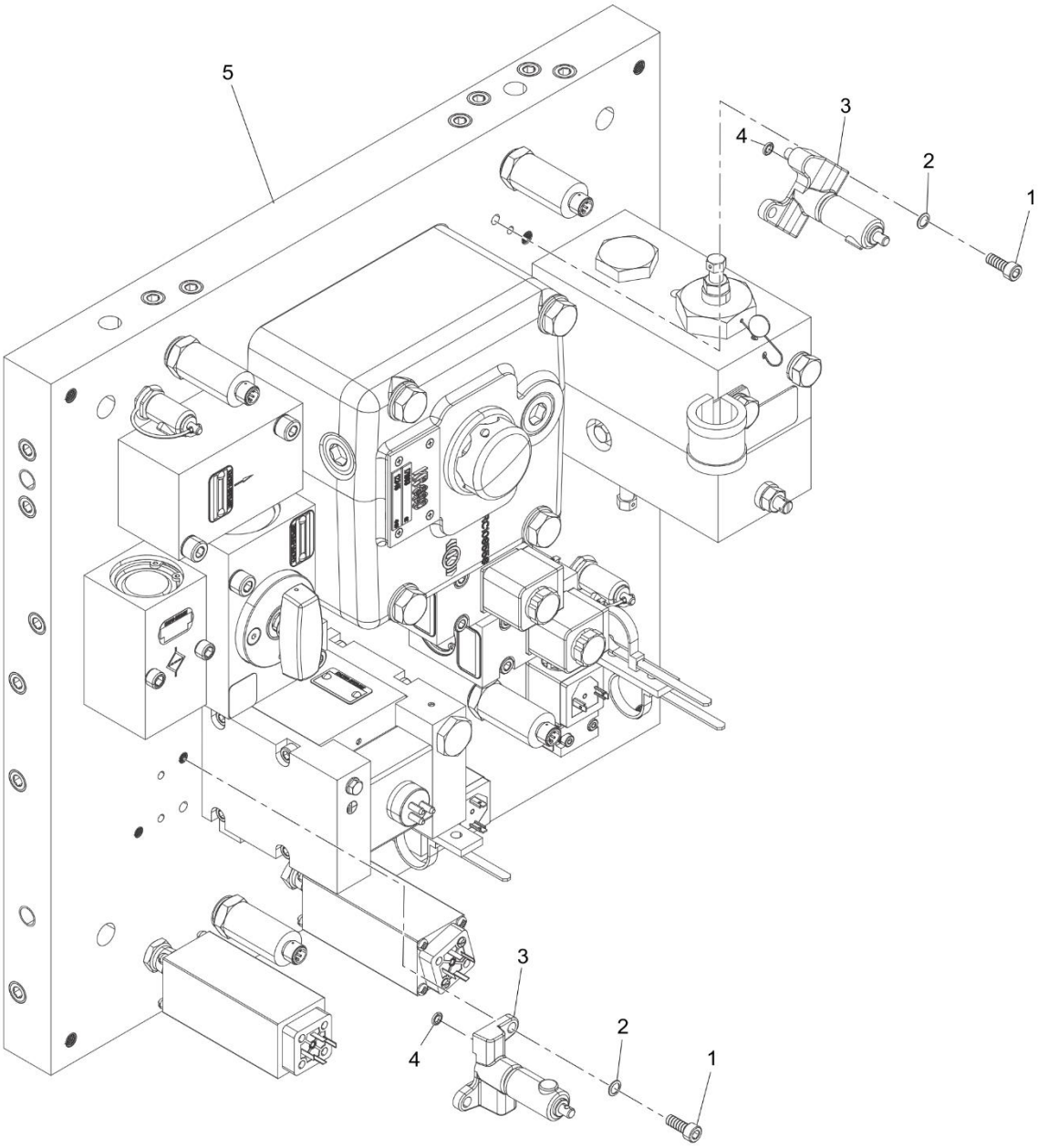

Figure 8-6: Flange Mounted Test Point, CT BCU

8.3.5 Replace Parking Brake Cutout (PBCO)

Equipment Conditions:

- Wheels chocked
- Parking Brakes applied
- Cut out MRCO and PBMRCO
- Cut out PBCO completely

Tools and Materials Needed:

- Standard hand tools
- Torque wrench, 6.3 ft-lbs
- Renolit HLT2-KB grease
- Anti-seize compound, W105374
- Torque stripe
- O-ring, p/n K4140, qty 3
- Lockwasher, p/n 805665/3, qty 2

Removal

1. Remove electrical connector from cutout valve (3), see Figure 8-7.
2. Remove two screws (1) and two lock washers (2) securing cutout valve (3) to BCU manifold (5). Discard lock washers.
3. Remove and discard three O-rings (4) from cutout valve (3).

Installation

1. Apply a light coat of Renolit HLT2-KB grease to three new O-rings (4) and install on cutout valve (3).
2. Apply anti-seize compound to threads of two screws (1).
3. Place cutout valve (3) on BCU manifold (5) and secure using two new lock washers (4) and two screws (1).
4. Tighten screws (1) to 6.3 ± 0.6 ft-lbs. Apply torque stripe.
5. Reconnect electrical connectors to cutout valve (3).

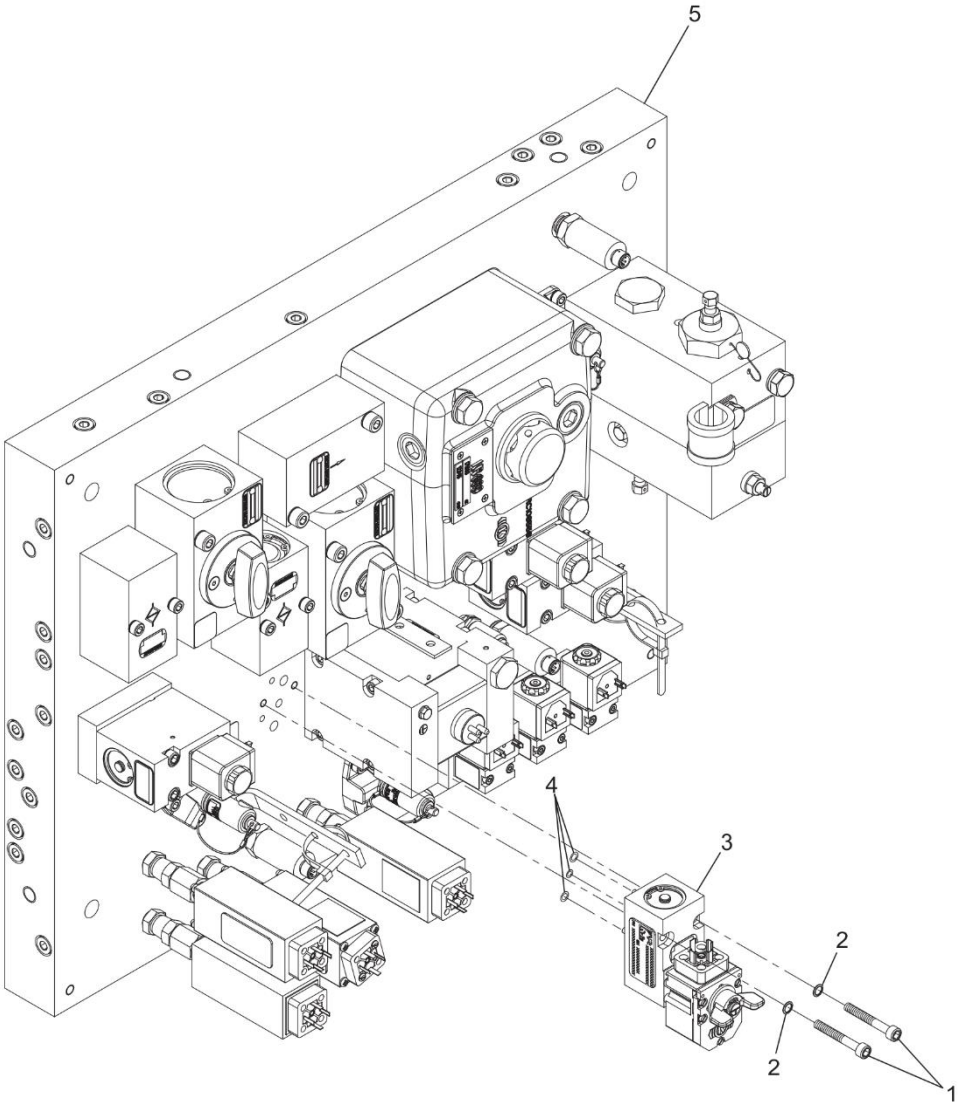

Figure 8-7: Parking Brake Cutout Valve, MT BCU

6. Cut in PBCO.

7. Cut in MRCO and allow ASU to fill MR and SR.

8. Listen for leaks. If leaks are found, cut out all valves in Equipment Conditions, remove cutout valve (3) and ensure O-rings (4) are seated properly, then reinstall.

8.3.6 Replace Emergency & Brake Magnet Valves (EMV, PBMV, FBCV)

Equipment Conditions:

- Wheels chocked
- Parking Brakes applied
- Cut out MRCO and PBMRCO

Tools and Materials Needed:

- Standard hand tools
- Torque wrench, 6.3 ft-lbs
- Renolit HLT2-KB grease
- Anti-seize compound, W105374
- Torque stripe
- O-ring, p/n K4140, qty 3
- Lockwasher, p/n 805665/3, qty 2

NOTE: This procedure applies to the motor truck BCU and the center truck BCU, both BCU graphics are shown.

Removal

1. Remove electrical connector from magnet valves (3), see Figure 8-8 and Figure 8-9.
2. Remove two screws (1) and two lock washers (2) securing magnet valve (3) to manifold (5). Discard the lockwashers.
3. Remove and discard three O-rings (4) from magnet valve (3).
4. Remove Park Brake Choke (5) from magnet valve (3).
5. Remove and discard three O-rings (6) from magnet valve (3).
6. Remove and discard three O-rings (7) from Park Brake Choke (5).
7. Remove and discard O-ring (8) from Park Brake Choke (5).

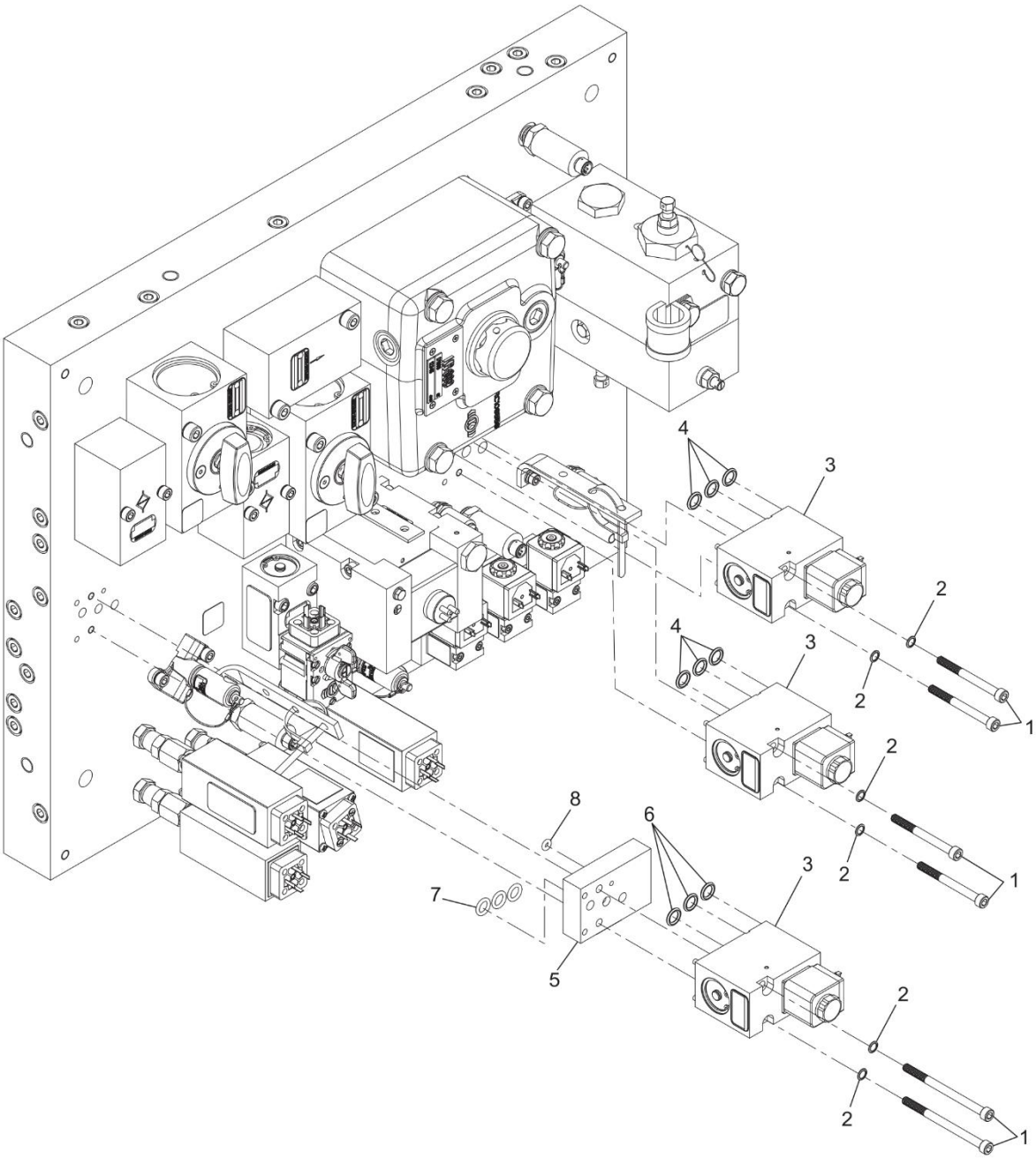

Figure 8-8: Emergency, Parking Brake Control Magnet Valve, MT BCU

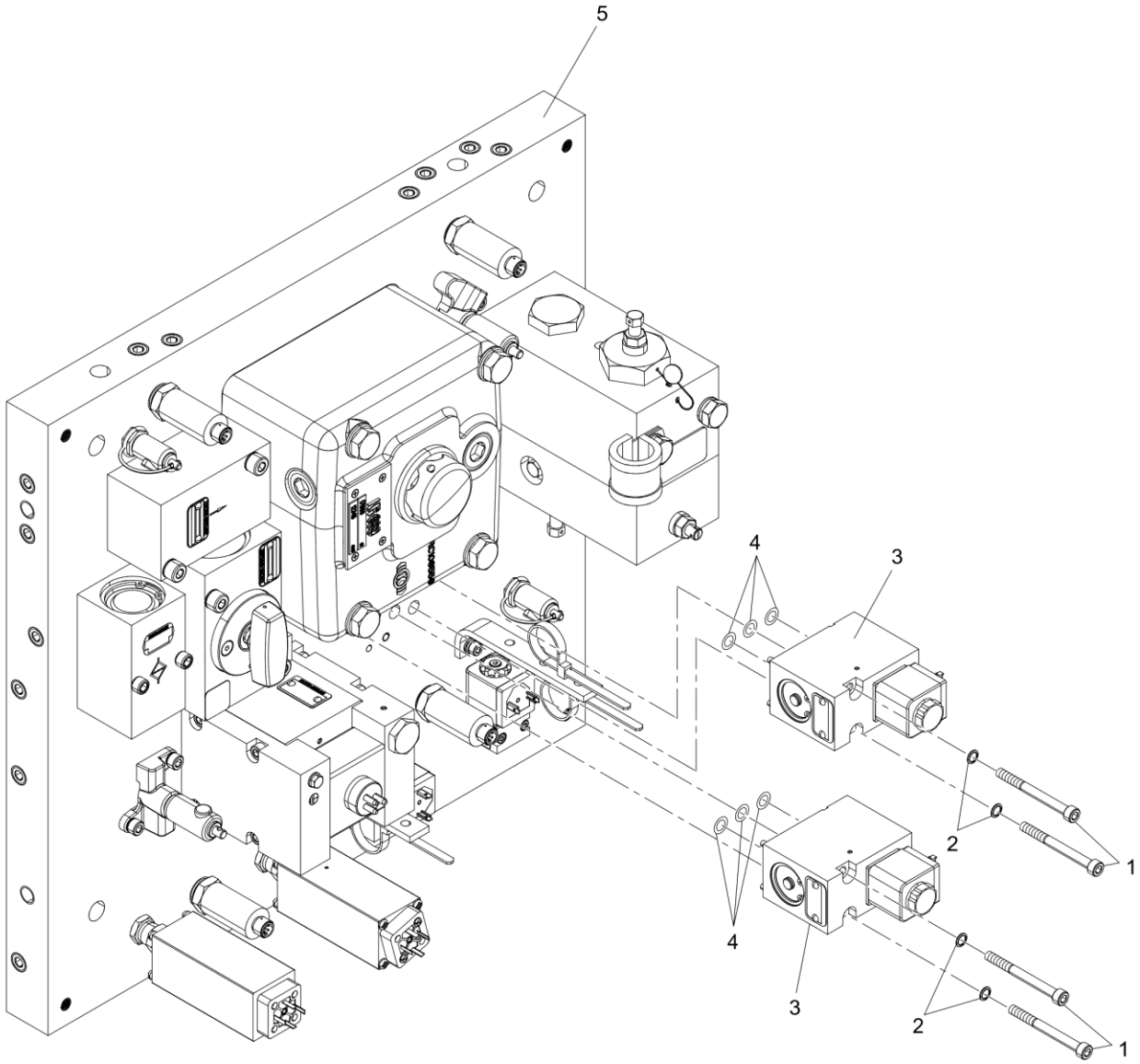

Figure 8-9: Emergency, Brake Control Magnet Valve, CT BCU

Installation

1. Apply a light coat of Renolit HLT2-KB grease to three new O-rings (4) and install on magnet valve (3).
2. Apply anti-seize to threads of two screws (1).
3. Place magnet valve (3) on manifold (5) and secure using two new lock washers (2) and two screws (1).
4. Apply a light coat of Renolit HLT2-KB grease to three new O-rings (7) and install on Park Brake Choke (5).
5. Apply a light coat of Renolit HLT2-KB grease to new O-ring (8) and install on Park Brake Choke (5).
6. Apply a light coat of Renolit HLT2-KB grease to three new O-rings (6) and install on magnet valve (3).
7. Apply anti-seize to threads of two screws (1).
8. Install on Park Brake Choke (5) and magnet valve (3) on manifold (5) and secure using two new lock washers (2) and two screws (1).
9. Tighten screws (1) to 6.3 ft-lbs (± .6) ft-lbs. Apply torque stripe.
10. Apply anti-seize to threads of two screws (1).
11. Place magnet valve (3) on manifold (5) and secure using two new lock washers (2) and two screws (1).
12. Tighten screws (1) to 6.3 ft-lbs (± .6) ft-lbs. Apply torque stripe.
13. Cut in MRCO and PBMRCO.
14. Listen for leaks. If leaks are found, remove magnet valve (3) and ensure O-rings (4) are seated properly. Reinstall magnet valve.
15. Reinstall electrical connector into magnet valve (3) and apply connector tape as follows:
    - EMV = red striped connector
    - PBMV = dark red striped connector
    - FBCV = blue striped connector

8.3.7 Replace Dump Valve (DV)

Equipment Conditions:

- Wheels chocked
- Parking Brakes applied
- Cut out MRCO and PBMRCO

Tools and Materials Needed:

- Standard hand tools
- Torque wrench, 14.8 ft-lbs
- Renolit HLT2-KB grease
- Anti-seize compound, W105374
- Torque stripe
- O-ring, p/n B33742/k, qty 2
- Lockwasher, p/n 805665/4, qty 2

NOTE: This procedure applies to the motor truck BCU and the center truck BCU, both BCU graphics are shown.

Removal

1. Remove electrical connector from Dump Valve (3), see Figure 8-10 and Figure 8-11.
2. Remove two screws (1) and two lock washers (2) securing Dump Valve (3) to BCU manifold (5). Discard lock washers.
3. Remove and discard two O-rings (4) from Dump Valve (3).

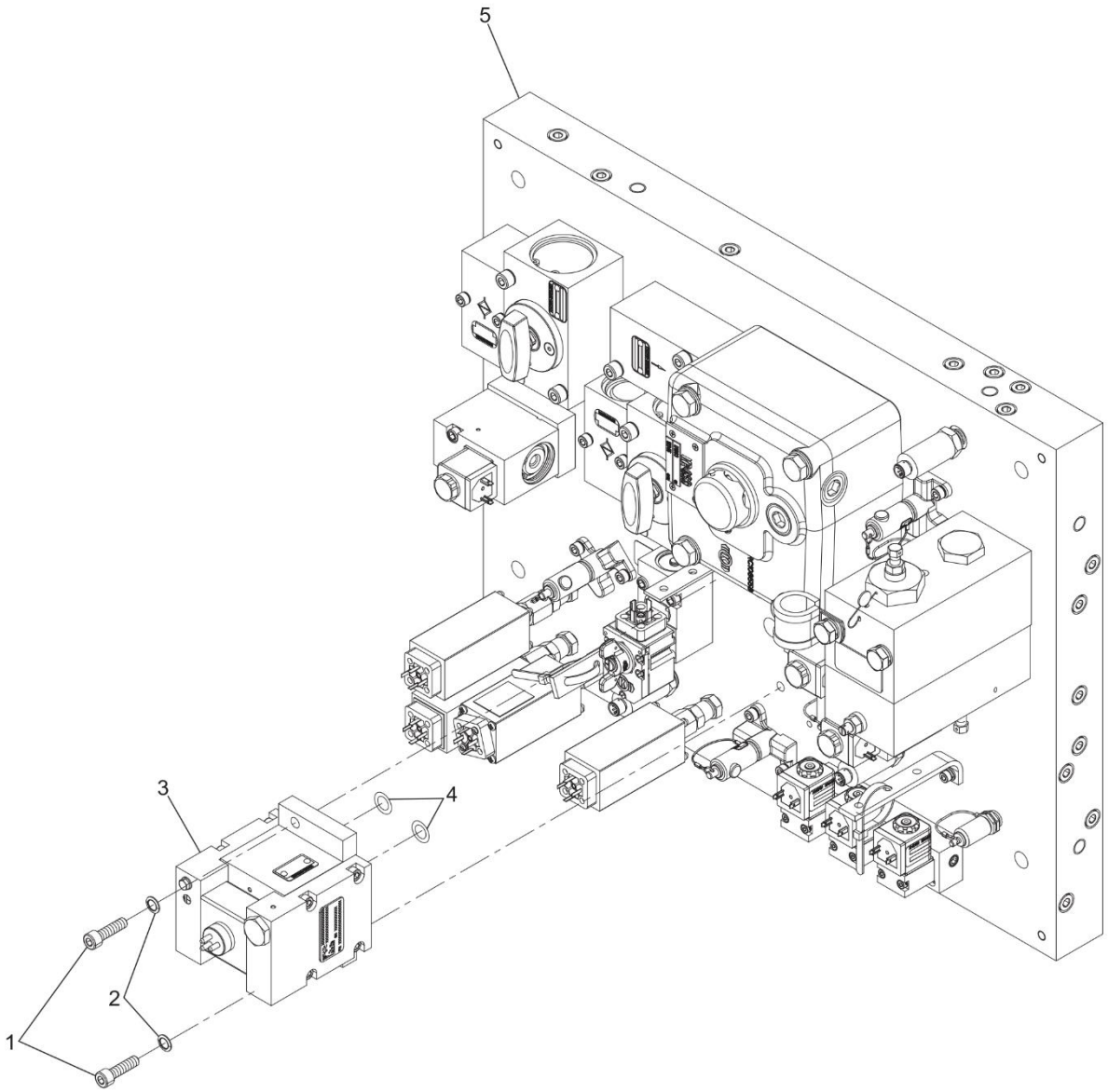

Figure 8-10: Dump Valve, MT BCU

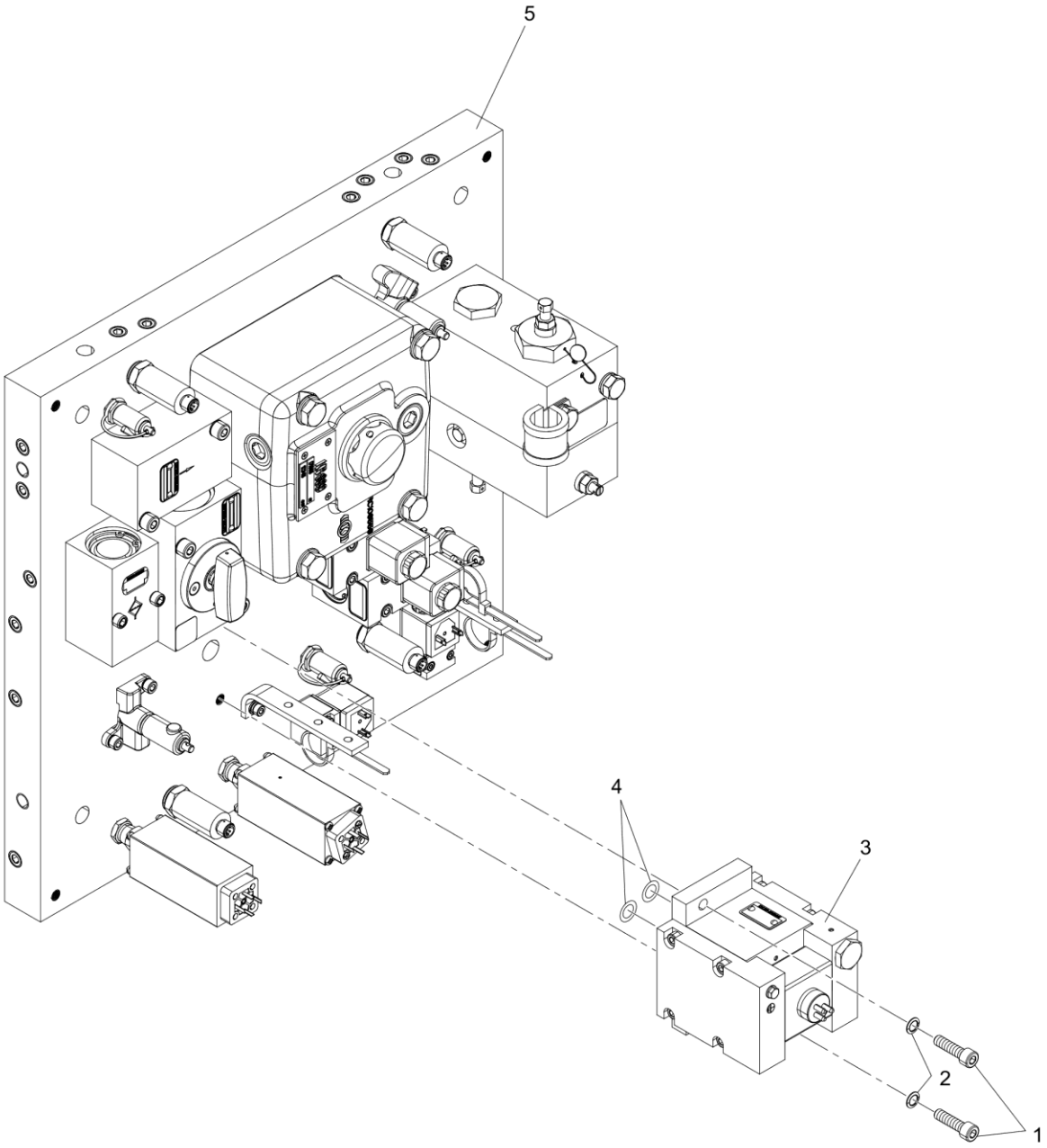

Figure 8-11: Dump Valve, CT BCU

Installation

1. Apply a light coat of Renolit HLT2-LB grease to two new O-rings (4) and insert into Dump Valve (3).
2. Apply anti-seize to threads of two screws (1).
3. Place Dump Valve (3) onto BCU manifold (5) and secure using two new lock washers (2) and two screws (1).
4. Tighten screws to 14.8 ± 1.5 ft-lbs. Apply torque stripe.
5. Reconnect electrical connector to Dump Valve (3).
6. Cut in MRCO and PBMRCO.
7. Listen for leaks. If leaks are found, remove Dump Valve (3) and ensure O-rings (4) are seated properly. Reinstall Dump Valve.

8.3.8 Replace Load Limiting Valve (LLV)

Equipment Conditions:

- Wheels chocked
- Parking Brakes applied
- Cut out MRCO and PBMRCO

Tools and Materials Needed:

- Standard hand tools
- Torque wrench, 30.2 ft-lbs
- Renolit HLT2-KB grease
- Anti-seize compound, W105374
- Torque stripe
- O-ring, p/n 744401, qty 3
- Lockwasher, p/n KS18/007, qty 2

NOTE: This procedure applies to the motor truck BCU and the center truck BCU, both BCU graphics are shown.

Removal

1. Remove two screws (1), two lock washers (2) and two flat washers (3) securing LLV (5) to BCU (7), remove clamp (4), see Figure 8-12 and Figure 8-13. Discard lock washers (2).

2. Remove and discard three O-rings (6) from LLV (5).

Installation

1. Apply a light coat of Renolit HLT2-KB grease to three new O-rings 6) and install on LLV (5).

2. Apply anti-seize compound to threads of two screws (1).

3. Place LLV (5) on BCU (7) and secure using two flat washers (3), two new lock washers (2) and two screws (1).

4. Torque screws (1) to 30.2 ± 3.0 ft-lbs. Apply torque stripe.

5. Cut in MRCO and PBMRCO.

6. Listen for leaks. If leaks are found, remove LLV (5) and ensure O-rings (6) are seated properly. Reinstall LLV.

8.3.9 Replace Relay Valve (RV)

Equipment Conditions:

- Wheels chocked
- Parking Brakes applied
- Cut out MRCO and PBMRCO

Tools and Materials Needed:

- Standard hand tools
- Torque wrench, 52.4 ft-lbs
- Renolit HLT2-KB grease
- Anti-seize compound, W105374
- Torque stripe
- O-ring, p/n, A40125/14 qty 3

NOTE: This procedure applies to the motor truck BCU and the center truck BCU, both BCU graphics are shown.

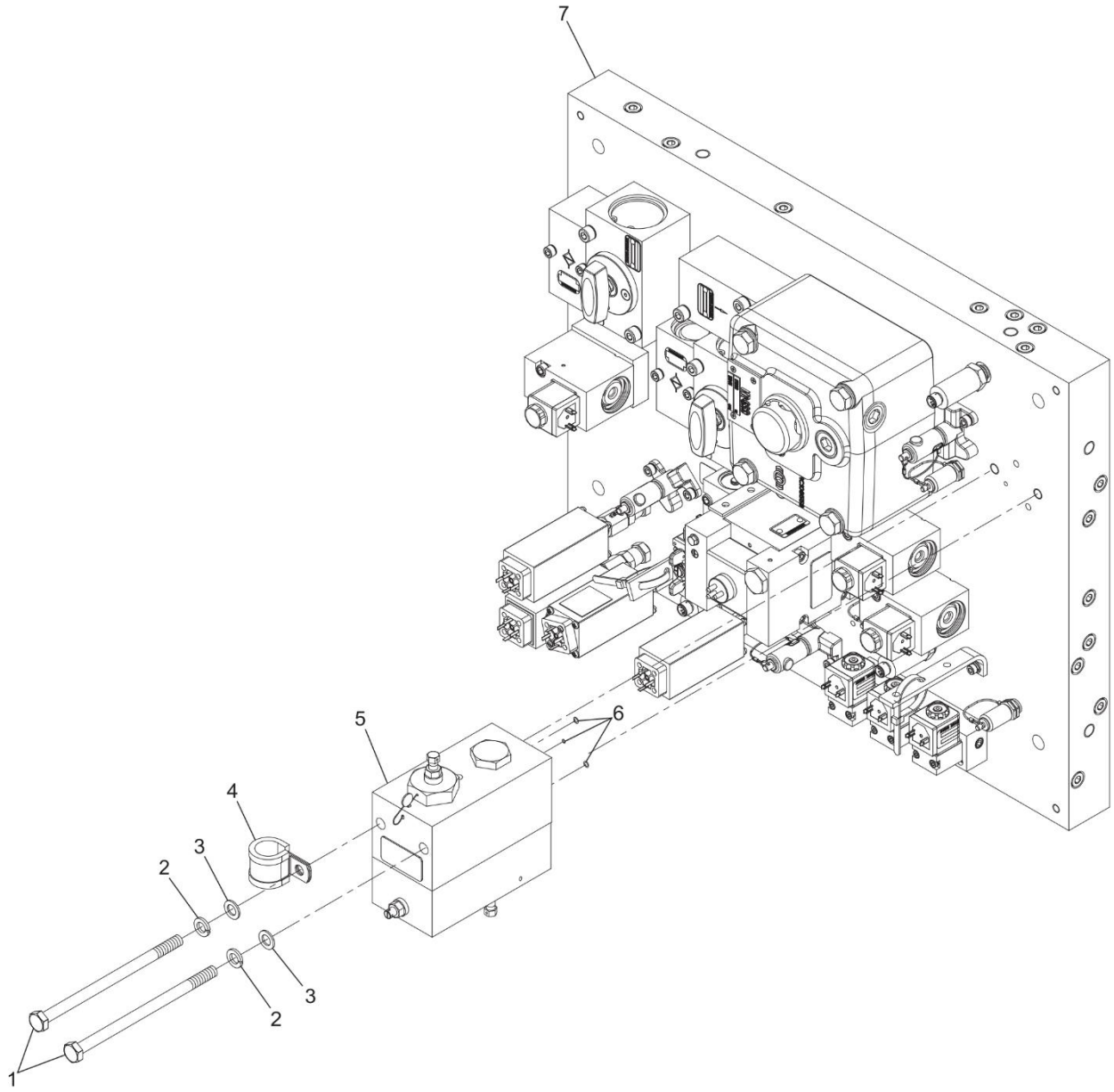

Figure 8-12: Load Limiting Valve, MT BCU

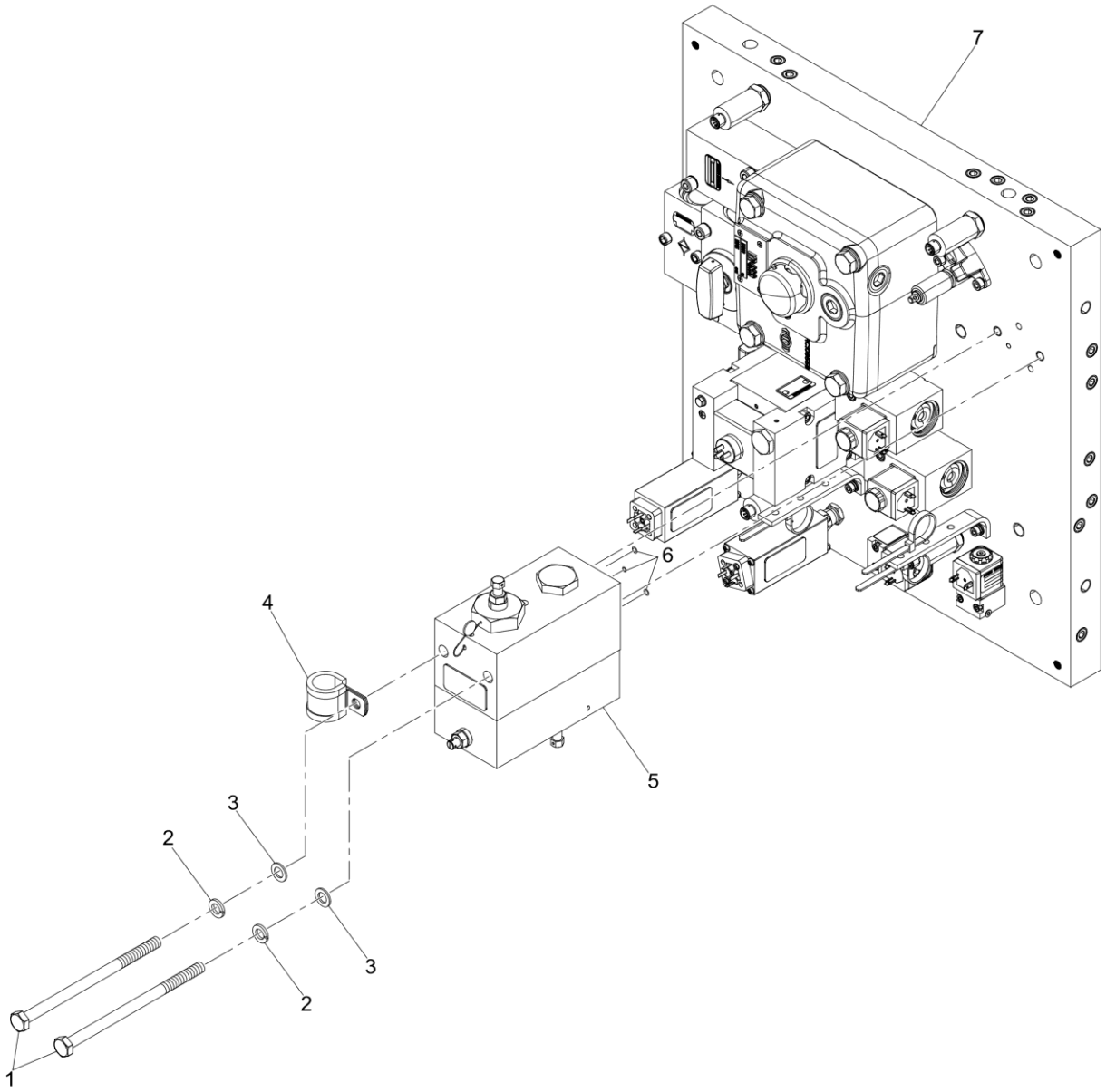

Figure 8-13: Load Limiting Valve, CT BCU

Remove

1. Turn off power to ECU at circuit breaker, see Figure 8-14 and Figure 8-15.
2. Cut MRCO and PBMRCO.
3. Cut out BCU Brake Cylinder output by closing and opening brake cylinder isolating cock multiple times until no air is vented from isolating cock.
4. Remove four screws (1) and four flat washers (2) securing relay valve (3) to BCU manifold (5).
5. Remove three O-rings (4) from relay valve (3) and discard O-rings.

Installation

1. Apply a light coat of Renolit HLT2-KB grease to three new O-rings (4).
2. Apply anti-seize compound to threads of four screws (1).
3. Position relay valve (3) and three new O-rings (4) onto BCU manifold (5) and secure with four screws (1) and four flat washers (2).
4. Torque screws (1) to 52.4 ± 5.2 ft-lbs. Apply torque stripe.
5. Cut in BCU manifold (5) by opening MRCO, PBMRCO and brake cylinder isolating cock.
6. Turn on power to ECU at circuit breaker.
7. Leak test relay valve (3) with soap solution. If bubbles form, remove relay valve (3) and check O-rings (4), clean bolt thread and apply anti-seize, reinstall relay valve.
8. Clean up all traces of the soap solution immediately after test.

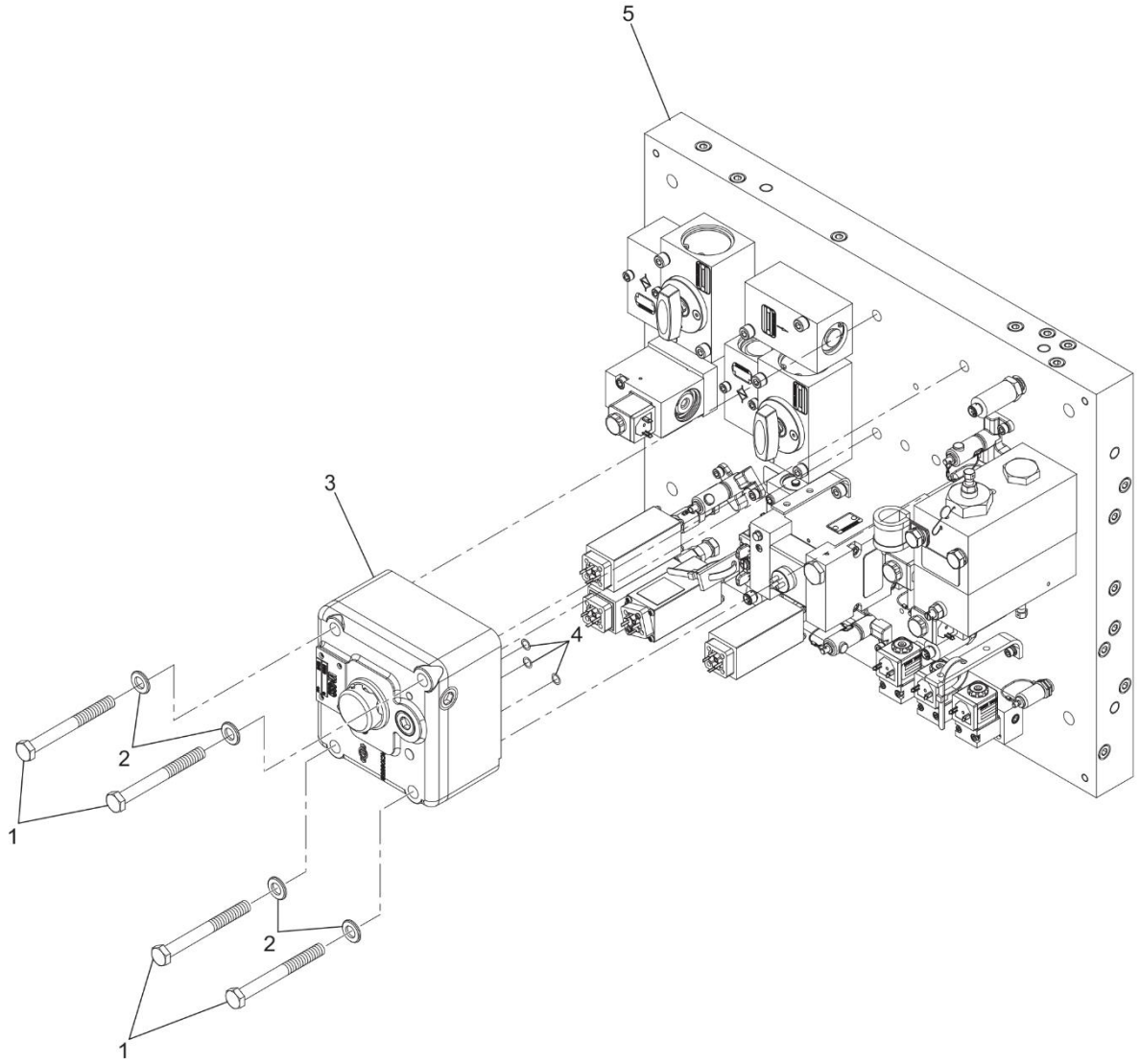

Figure 8-14: Relay Valve, MT BCU

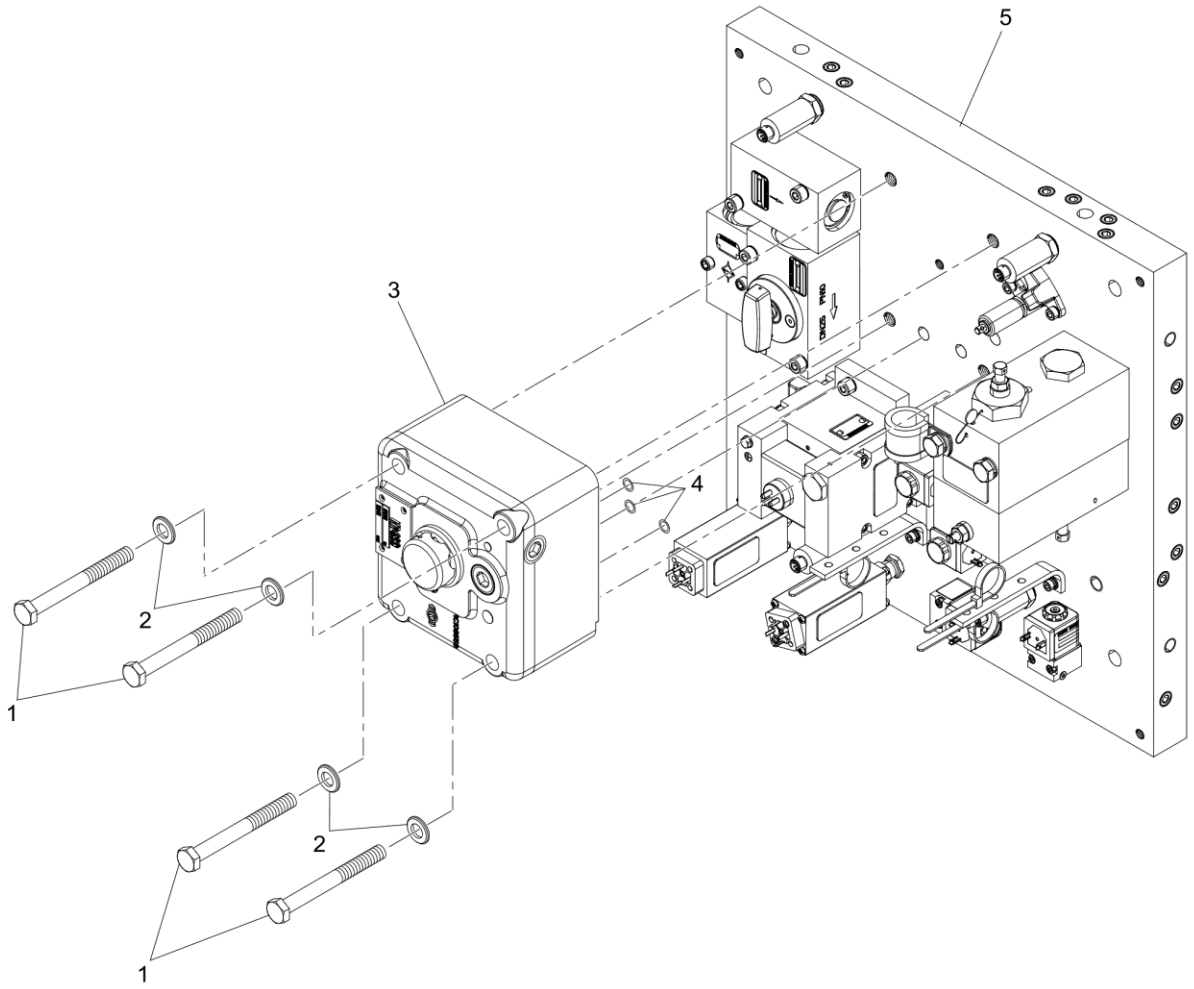

Figure 8-15: Relay Valve, CT BCU

8.3.10 Replace Main Reservoir and Parking Brake Cutout Valve (MRCO, PBMRCO)

Equipment Conditions:

- Wheels chocked
- Parking Brakes applied
- Cut out MRCO and PBMRCO

Tools and Materials Needed:

- Standard hand tools
- Torque wrench, 14.8 ft-lbs
- Renolit HLT2-KB grease
- Anti-seize compound, W105374
- Torque stripe
- Lockwasher, p/n 805665/4, qty 2
- O-ring, p/n OR121000, qty 3

NOTE: This procedure applies to the motor truck BCU and the center truck BCU, both BCU graphics are shown.

Remove

1. Remove two screws (1) and two lock washers (2) securing MRCO or PBMRCO (3) from manifold (5), see Figure 8-16 and Figure 8-17. Discard lock washers (2).
2. Remove and discard three O-rings (4) from MRCO or PBMRCO (3).

Installation

1. Apply a light coat of Renolit HLT2-KB grease to three new O-rings (4) and install on MRCO or PBMRCO (3).
2. Apply anti-seize compound to threads of two screws (1).
3. Place MRCO or PBMRCO (3) on manifold (5) and secure using two new lock washers (2) and two screws (1).
4. Tighten screws (1) to 14.8 ± 1.5 ft-lbs. Apply torque stripe.
5. Cut in MRCO or PBMRCO.
6. Listen for leaks. If leaks are found, close valves in Equipment Conditions, remove MRCO or PBMRCO (3) and ensure O-rings (4) are seated properly, and then reinstall.

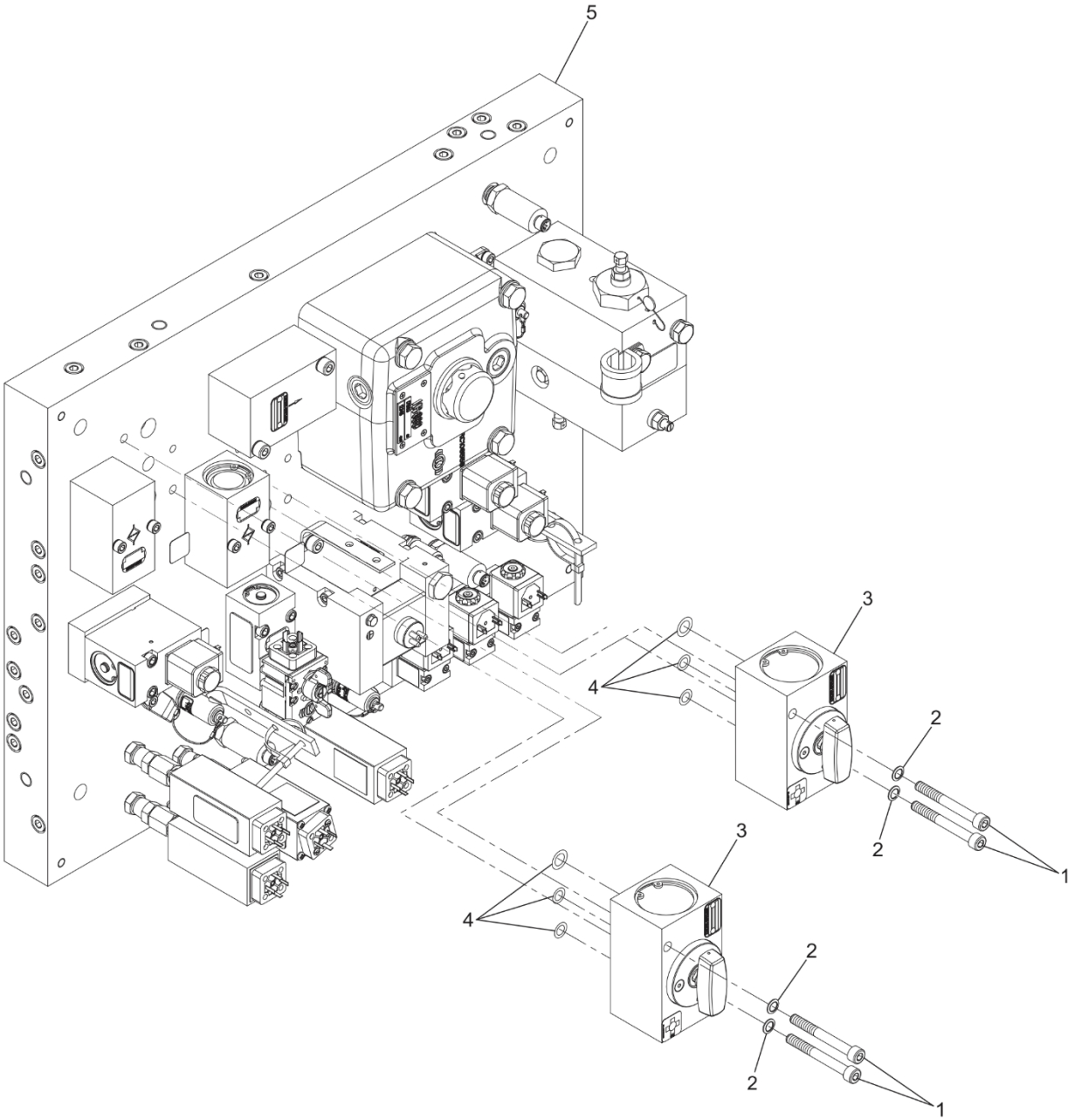

Figure 8-16: Main Reservoir, Parking Brake Cutout Valve, MT BCU

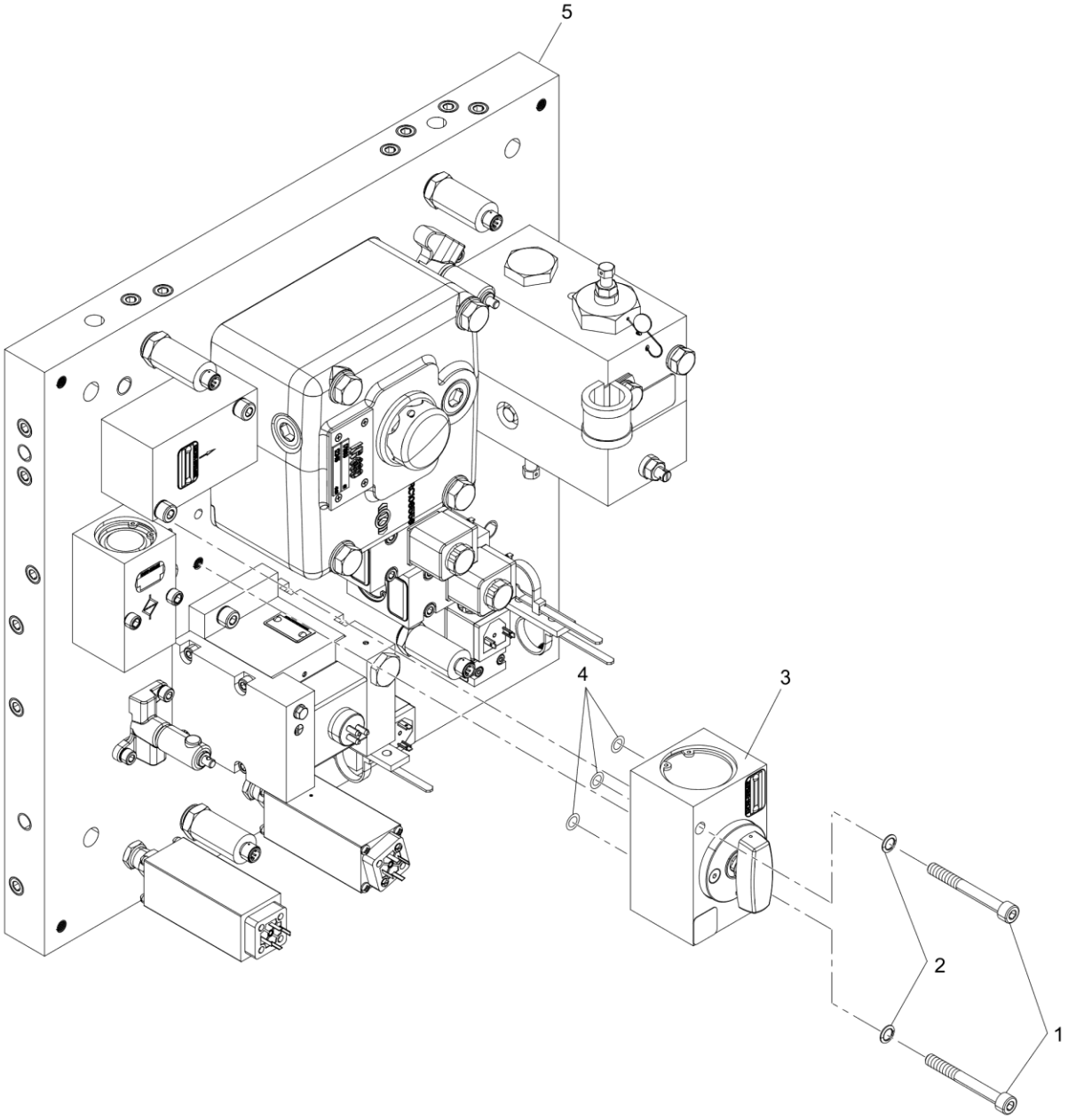

Figure 8-17: Main Reservoir Cutout Valve, CT BCU

8.3.11 Replace Main Reservoir Check Valve (CV)

Equipment Conditions:

- Wheels chocked
- Parking Brakes applied
- Cut out MRCO

Tools and Materials Needed:

- Standard hand tools
- Torque wrench, 14.8 ft-lbs
- Renolit HLT2-KB grease
- Anti-seize compound, W105374
- Torque stripe
- Lockwasher, p/n 805665/4, qty 2
- O-ring, p/n B72767, qty 2

NOTE: This procedure applies to the motor truck BCU and the center truck BCU, both BCU graphics are shown.

Remove

1. Remove two screws (1) and two lock washers (2) securing check valve (3) to BCU manifold (5), See Figure 8-18 and Figure 8-19. Discard lock washers (2).
2. Remove and discard two O-rings (4).

Installation

1. Apply a light coat of Renolit HLT2-KB grease to two new O-rings (4).
2. Apply anti-seize compound to threads of two screws (1).
3. Place check valve (3) and O-rings (4) on BCU manifold (5) and secure with two new lock washers (2) and two screws (1).
4. Tighten screws (1) to 14.8 ± 1.5 ft-lbs. Apply torque stripe.
5. Cut in MRCO.
6. Listen for leaks. If leaks are found, remove check valve (3) and ensure O-rings (4) are seated properly, and then reinstall.

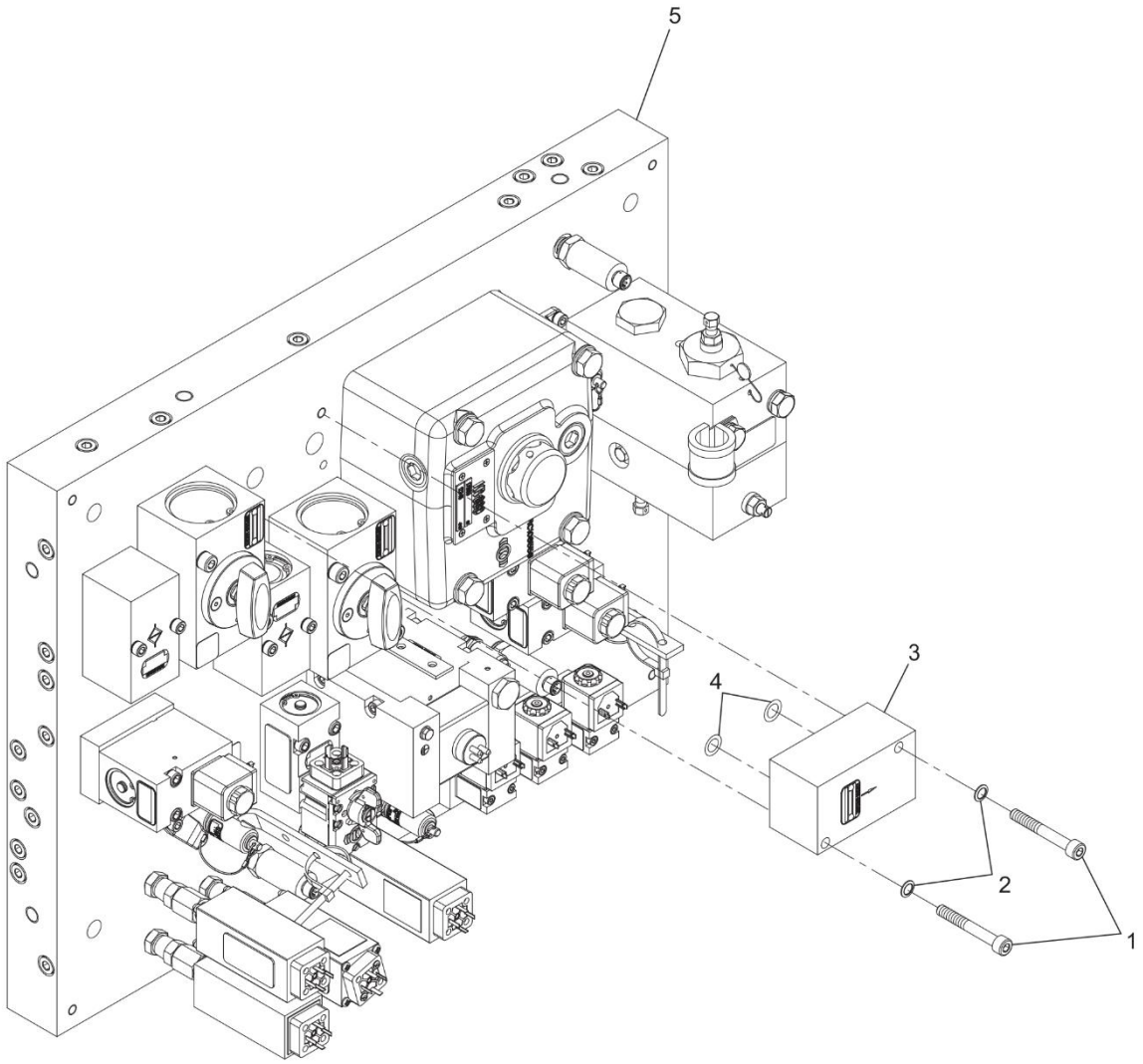

Figure 8-18: Main Reservoir Check Valve, MT BCU

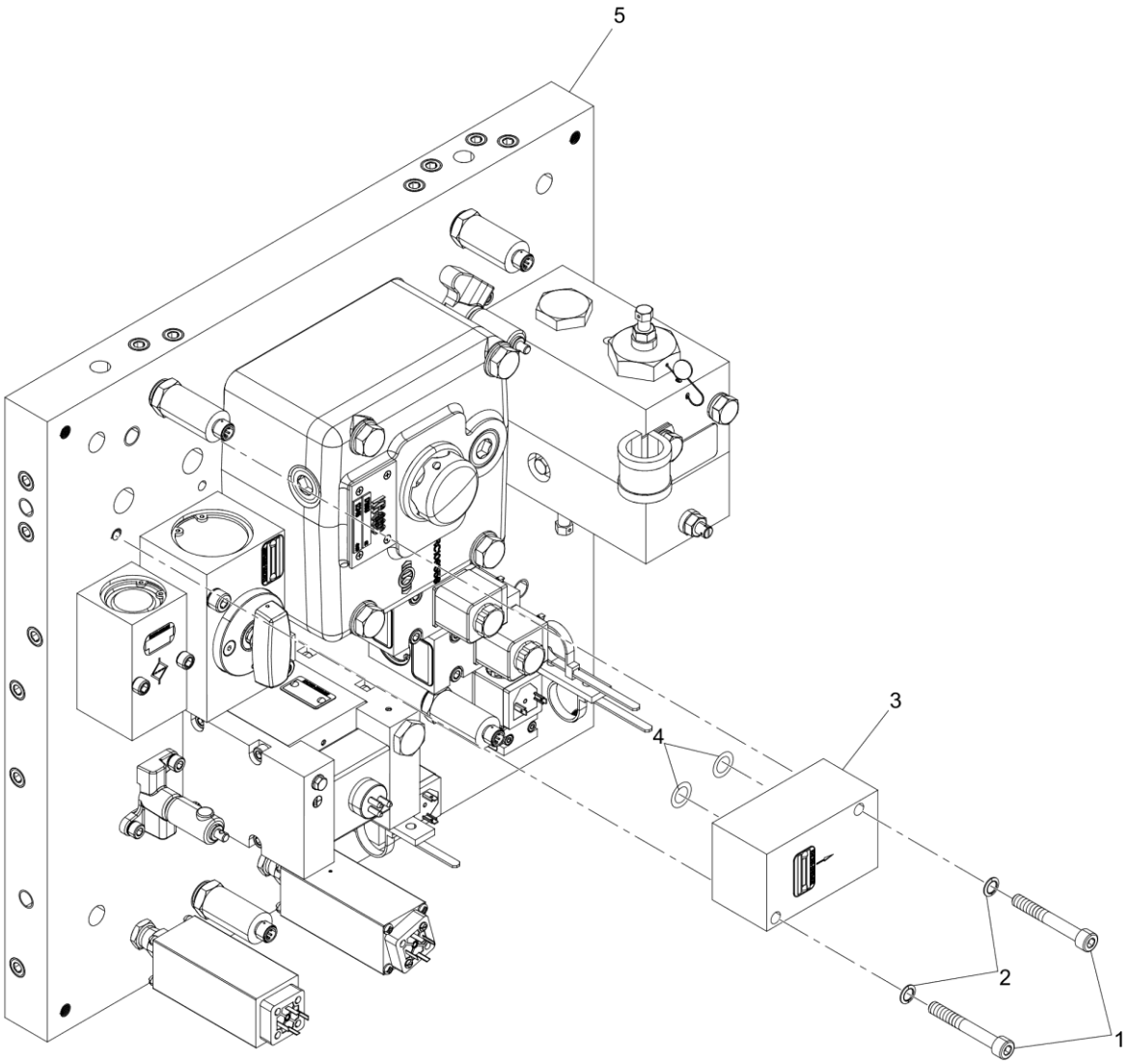

Figure 8-19: Main Reservoir Check Valve, CT BCU

8.3.12 Replace Main Reservoir and Parking Brake Air Filters (PBFLT, FLT)

Equipment Conditions:

- Wheels chocked
- Master Controller placed in EB for 5 seconds, then placed in A/S position
- Parking Brakes applied via Auxiliary Control Panel
- Cut out MRCO and PBMRCO

Tools and Materials Needed:

- Standard hand tools
- Torque wrench, 6.3 ft-lbs
- Renolit HLT2-KB grease
- Anti-seize compound, W105374
- Torque stripe
- Lockwasher, p/n 805665/3, qty 2
- O-ring, p/n B72767, qty 2

NOTE: This procedure applies to the motor truck BCU and the center truck BCU, both BCU graphics are shown.

Remove

1. Remove two screws (1) and two lock washers (2), securing air filter (3) to manifold (5), see Figure 8-20 and Figure 8-21. Discard lockwashers (2).
2. Remove and discard two O-rings (4) from air filter (3).

Installation

1. Lightly coat two new O-rings (4) with Renolit HLT2-KB grease.
2. Apply anti-seize compound to threads of two screws (1).
3. Secure air filter (3) and new O-rings (4) to manifold (5) using two new lock washers (2) and two screws (1).
4. Tighten screws to 6.3 ± 0.6 ft-lbs. Apply torque stripe.
5. Cut in MRCO AND PBMRCO on applicable BCU.
6. Listen for leaks. If leaks are found, remove air filter (3) and ensure O-rings (4) are seated properly and reinstall air filter.

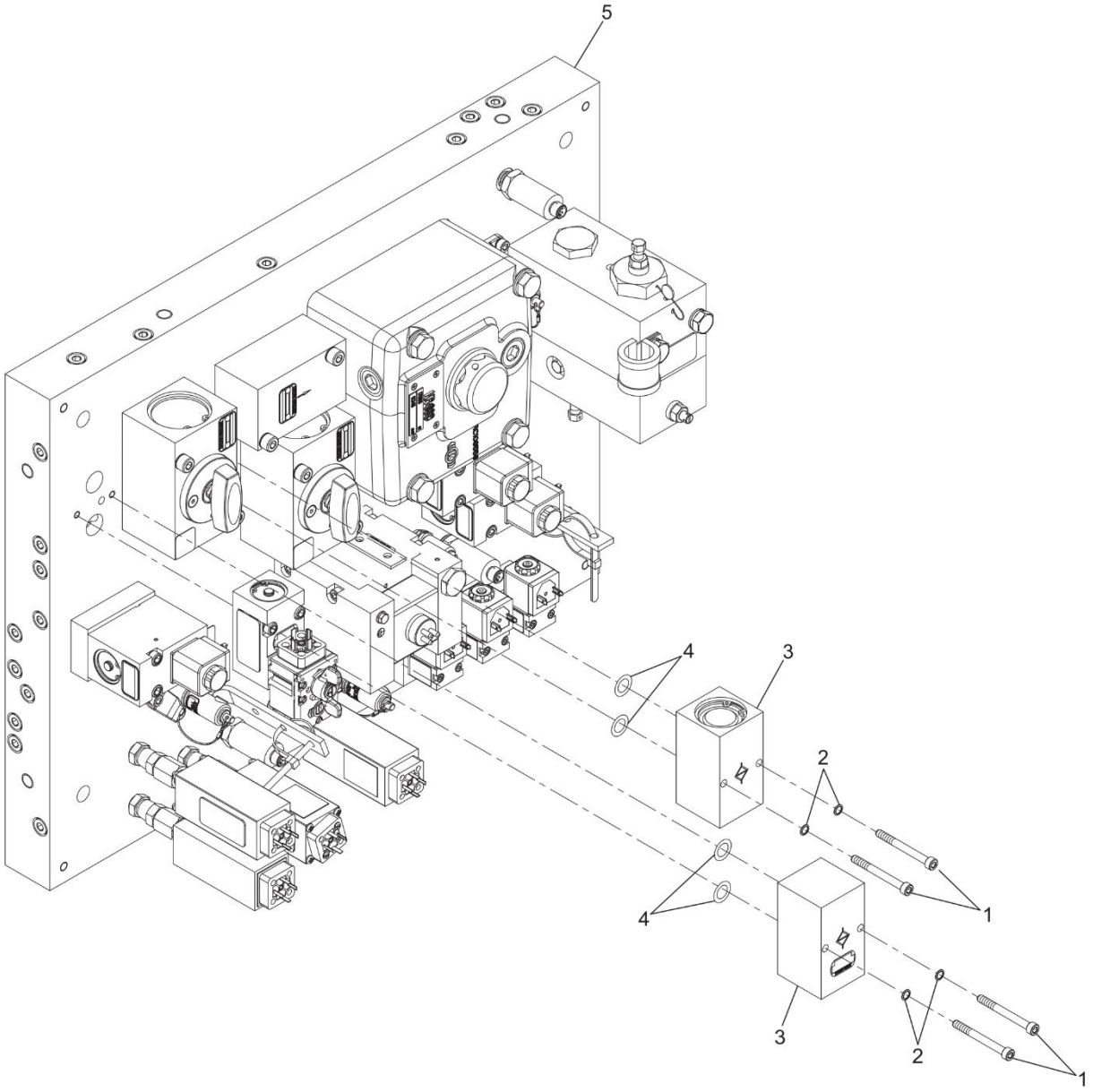

Figure 8-20: Air Filters, MT BCU

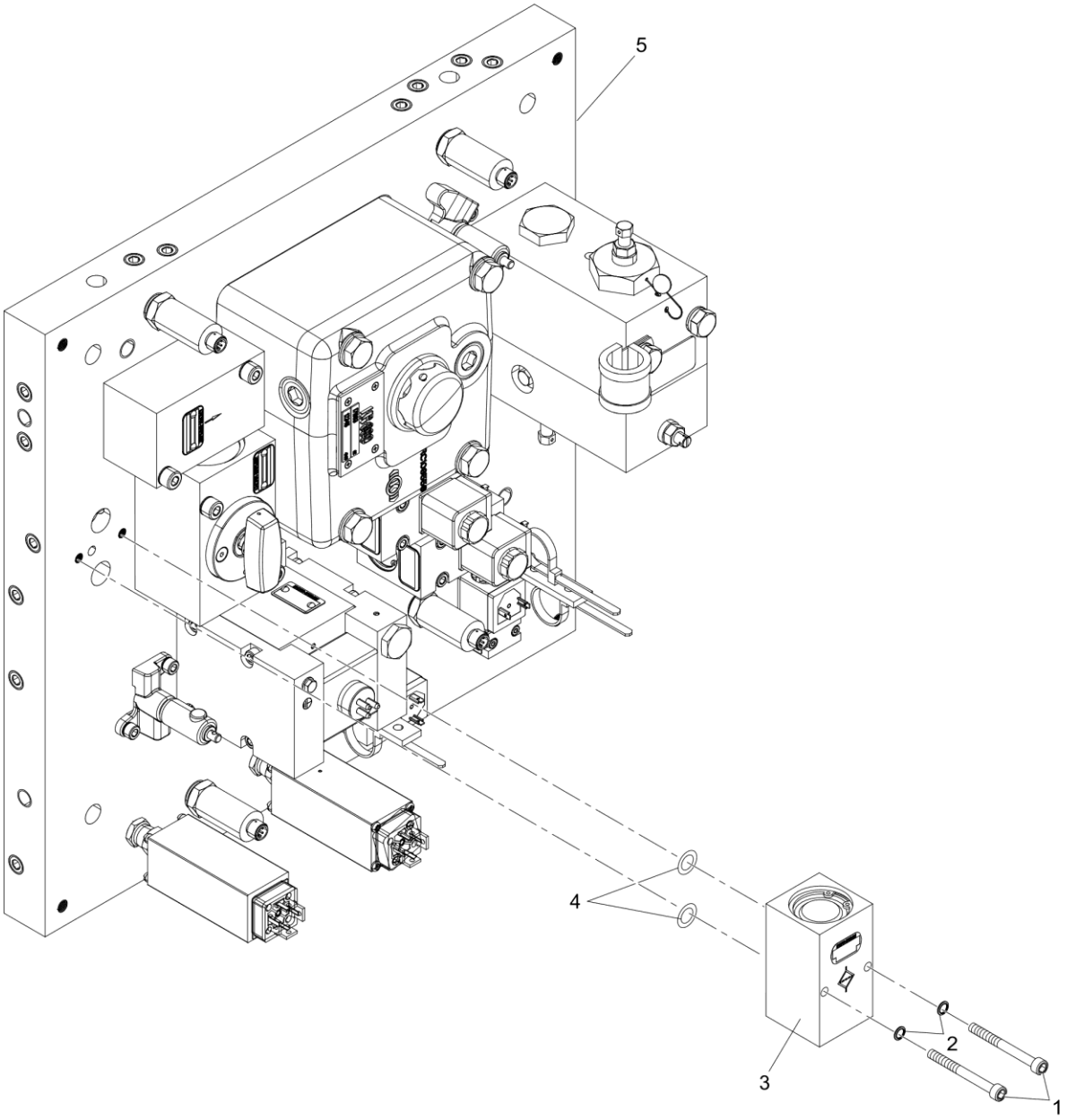

Figure 8-21: Air Filters, CT BCU

CHAPTER 9.0

TROUBLESHOOTING

9.1 Introduction

The system may develop an operational problem due to a mechanical or an electrical condition. This chapter gives a guide for troubleshooting based on observed problems and using ECU diagnostics.

NOTE**:** The BCU can be troubleshot using the Portable Test Unit 816441, connectors can be directly connected to the MT or CT BCU and automated test procedures can be completed. Refer to the Friction Brake Portable Test Unit BTU PTE Manual MU-273-7-01.

NOTE: If cab controls are used while the ECU is still powering up and running its self-test, fault codes may be logged. These are normal and do not require any action.

Table 9-1. Friction Brake System Troubleshooting

Step	Symptom	Probable Cause	Tests	Checks	Corrective Action
1	Inadequate air supply.	Air Supply Unit (ASU).			Refer to Table 9-2
1.1	Inadequate air supply.	Severe leaks in piping or components.		Visually check and listen for leaks with compressor running.	Repair or replace as needed.
1.2	Inadequate air supply.	Cut-out cock left open on one or more reservoirs.		Check cut-out cocks on reservoirs.	Repair or replace as needed. Close cut-out cock.
2	4-Digit MMI Code on ECU illuminates (Class 3 failure will also cause application of emergency brakes).	ECU indicating detection of a Class 1, 2 or 3 failure.		Check display on ECU for error codes.	Refer to Table 9-6

Table 9-1. Friction Brake System Troubleshooting (cont'd.)

Step	Symptom	Probable Cause	Tests	Checks	Corrective Action
3	Friction Brakes do not apply.	Pneumatic brake control problem.		Check for brake cylinder pressure at TP-BC. If pressure is present, then check/correct the caliper operation. If no pressure is present then troubleshoot the BCU. Refer to BTU PTE or applicable pneumatic schematics to troubleshoot the motor truck or center truck BCUs.	Repair or replace as needed.
3.1	Friction Brakes do not apply.	Incorrect brake command.	Verify that brake master controller demand signal and brake mode is correct at ECU.	Use Service Terminal to check operation.	Repair or replace as needed.
4	Friction brakes do not release.	Pneumatic brake control problem.		Check for brake cylinder pressure at TP-BC and park brake pressure at TP-PB. If correct pressures are present, then check/correct the caliper operation. If pressure is not correct for brake release, troubleshoot the BCU. Refer to BTU PTE or applicable pneumatic schematics to troubleshoot the motor truck or center truck BCU's.	Repair or replace as needed.
4.1	Friction brakes do not release.	Emergency brake safety loop circuit failure.			Repair or replace as needed.

Table 9-2. Air Supply Unit System Troubleshooting

Step	Symptom	Probable Cause	Tests	Checks	Corrective Action
1	Loss of air supply on vehicle	Power supply is off		Check vehicle circuit breaker per RMSM.	Close open circuit breakers
1.1	Loss of air supply on vehicle	Loss of power supply on vehicle		Check vehicle electrical system per RSMS.	Repair or replace as needed
1.2	Loss of air supply on vehicle	Motor contactor has failed		Check motor contactor.	Repair or replace per HRM
1.3	Loss of air supply on vehicle	Pressure switch has failed		Inspect pressure switch.	Replace if needed
1.4	Loss of air supply on vehicle	Motor has failed		Check electrical connections.	Tighten loose connections
1.5	Loss of air supply on vehicle	Motor compressor			Refer to Table 9-3
1.6	Loss of air supply on vehicle	Blocked or open vehicle piping		Check for blockages or open conditions.	Repair or replace if needed
1.7	Loss of air supply on vehicle	Low voltage wiring		Check circuit comprising input voltage, pressure switch and motor contactor.	Tighten loose connections. If connections are OK, repair or replace per HRM
2	Air Supply Unit runs continuously	Pressure Switch		Check operation.	Replace switch if needed per HRM
2.1	Air Supply Unit runs continuously	Motor contactor		Check motor contactor.	Replace contactor if needed per HRM
2.2	Air Supply Unit runs continuously	Excessive leakage in vehicle piping		Check for leaks.	Repair or replace as needed
2.3	Air Supply Unit runs continuously	Air dryer			Refer to Table 9-4
2.4	Air Supply Unit runs continuously	Compressor Motor Set			Refer to Table 9-3
4	Excessive moisture or oil in main line	Motor compressor set			Refer to Table 9-3
4.1	Excessive moisture or oil in main line	Air Dryer			Refer to Table 9-4

Table 9-3. Motor Compressor Set Troubleshooting

Step	Symptom	Probable Cause	Tests	Checks	Corrective Action
1	Motor compressor set not starting up	Unit not being activated electrically		Check the connector	
1.2	Motor compressor set not starting up	Compressor is jammed			Crank the compressor by hand, check the coupling and impeller. Remove and replace ASU
1.3	Motor compressor set not starting up	Unit is defective			Remove and replace ASU
2	Air discharging constantly from the air pipe connections	Air pipe connections leaking or fittings are loose	Leakage test with leak detector.		Tighten the fittings at the connections
3	Compressor losing oil	Screw plugs in the crankcase loose or seals defective		Inspect screw plugs for leaks.	Tighten screw plugs. If necessary, replace seals
4	Pressure rising inadequately or too slowly	Pneumatic system leaking severely	Test pneumatic system for leaks.		Tighten leaking connections
4.1	Pressure rising inadequately or too slowly	Piston sealing poorly because of severely worn or sticking piston rings			Overhaul per HRM
5	Inadequate air delivery at normal compressor working temperature	Leaks in the air piping or at the flange joints on the compressor	Test for leakage with leak detector.		Tighten fasteners
5.1	Inadequate air delivery at normal compressor working temperature	Air intake choked		Check the intake.	Clean if necessary
5.2	Inadequate air delivery at normal compressor working temperature	Filter dirty			Replace air filter
6	Inadequate air delivery at excessive compressor working temperature	Valves leaking or defective			Overhaul per HRM
7	Sufficient air delivery at a very elevated compressor working temperature	Cooler dirty or deposits inside cooler			Clean cooler

Table 9-4. Air Dryer Troubleshooting

Step	Symptom	Probable Cause	Tests	Checks	Corrective Action
1	Air dryer unit inoperative	Unit not being activated pneumatically	Test the unit for correct pneumatic control.		Replace air dryer if necessary
1.2	Air dryer unit inoperative	Unit not being activated electrically	Test the unit for correct electric control.		Replace air dryer if necessary
2	Air discharging constantly from the air pipe connections	Ports leaking	Leakage test with leak detector.		Tighten the pipe connections
3	White coating forming at drainage port A	Desiccant is no longer good	Humidity test.		Replace desiccant
4	MR pressure not rising, although compressor is running	Air dryer frozen because heater has failed	Test heater.		Thaw out duplex piston valve
4.1	MR pressure not rising, although compressor is running	Air dryer frozen because heater has failed		Check the cartridge heater and thermostat for correct cabling and operation	
4.2	MR pressure not rising, although compressor is running	Air dryer frozen because heater has failed			Replace air dryer
5	Air discharging heavily from the silencer's drainage port A (provided the air dryer unit is working correctly, regeneration air must be discharged as usual while the compressor is delivering air)	Air dryer is defective			Replace air dryer
6	Regeneration air not discharging from the silencer's drainage port A while the compressor is delivering air	Air dryer is defective			Replace air dryer

Table 9-4. Air Dryer Troubleshooting (cont'd.)

Step	Symptom	Probable Cause	Tests	Checks	Corrective Action
7	Air discharging constantly from exhaust port O3 (provided the air dryer unit is working correctly, a short blast of air must be discharged every second time that the magnet valve toggles while the compressor is delivering air)	Air dryer is defective			Replace air dryer
8	Magnet Valve not shuttling while the compressor is delivering air (air is discharged from exhaust port every 2 minutes) and air not discharging from exhaust port O3	Air dryer is defective			Replace air dryer
9	Air discharging constantly from exhaust O1/O2	Air dryer is defective			Replace air dryer
10	Pressure dew point above the boundary 35%	Desiccant dirty			Replace desiccant

Table 9-5. Electronic Control Unit Troubleshooting

Step	Symptom	Probable Cause	Tests	Checks	Corrective Action
1	The ECU does not display “9999”, “95”, or an error code.	No power.		Check if vehicle power is available to ECU.	Restore power to ECU.
1.1	The ECU does not display “9999”, “95”, or an error code.	Loose cables.		Check that power cables are not loose.	Connect cables correctly.
1.2	The ECU does not display “9999”, “95”, or an error code.	Loss of internal power.		Check if green LED’s are lit on ECU power boards.	Replace board if LED is not on and vehicle power is applied to ECU.
1.3	The ECU does not display “9999”, “95”, or an error code.	MB04 not installed and seated correctly.		Check installation.	Turn off power, remove board and reinstall.
1.4	The ECU does not display “9999”, “95”, or an error code.	Display on MB04 not functional.		Check if main board is functional by substituting a known functional board.	Return removed board to KBC for replacement if display is now working.
2	ECU display shows ‘95’	Temporary fault in ECU memory (fault existed, but it is no longer present).		Review error codes. Press and release pushbutton S1 to manually cycle through each error code. Press and hold pushbutton S1 until 4 asterisks appear to make ECU automatically cycle through error codes. Press pushbutton S3 until 4 asterisks appear. This clears the errors from the memory of the ECU.	

Table 9-5. Electronic Control Unit Troubleshooting (cont'd.)

Step	Symptom	Probable Cause	Tests	Checks	Corrective Action
3	The ECU does not display "9999" during normal operation.				Code "9999" indicates that the ECU diagnostics has not detected any faults. If there is a problem in the braking system, the cause of the problem may be outside of the ECU's ability to detect a fault. Check inputs and outputs using the Service Terminal. If fault cannot be found outside of ECU and the ECU is suspected as the probable cause, replace each ESRA circuit board, one at a time with a known functional board and check for correct operation after each replacement.
4	The ECU displays "M???".	Improper software installation.			Reload software.

Table 9-6. Electronic Control Unit Fault Code Troubleshooting

MMI Code	Symptom	Probable Cause	Tests	Checks	Corrective Action
	MB04_01 (Node 1) Faults				
CC-1	ERR_MB04_1_CAN_COM	Communication error on ESRA system bus		Use ST03 to check software version on MB04 board.	Reload software. Replace MB04 board.
NA-1	ERR_MB04_1_NV_ACCESS	Error by reading net variable		Use ST03 to check software version on MB04 board.	Reload software. Replace MB04 board.
TO-1	ERR_MB04_1_NV_TIMEOUT	The MB04_1 board reports this error when it is unable to receive at least one of the expected network variables with the initial setpoints		Use ST03 to check communication between the MB04 board and the other ECU boards.	Replace the board that is not communicating with the MB04 board
IO-1	ERR_MB04_1_DRV_IO_ACCESS	Error reading inputs or writing outputs of this board		Use ST03 to check software version on MB04 board.	Reload software. Replace MB04 board.
AF-1	ERR_MB04_1_ACTIVATE_FCT	Function activation error		Use ST03 to check software version on MB04 board.	Reload software. Replace MB04 board.
CF-1	ERR_MB04_1_CONFIGURATION	Software configuration error		Use ST03 to check software version on MB04 board.	Reload software. Replace MB04 board.
ER-1	ERR_MB04_1_EEP_FAILURE	EEPROM defective		Use ST03 to check software version on MB04 board.	Reload software. Replace MB04 board.
X1-1	ERR_MB04_1_BOARD_CODING	Coding via front plug does not match internally stored node number		Disconnect cable from MB04 board front connector. Check that a jumper is installed between pins z32 and b30 on MB04 front connector.	Install jumper between pins z32 and b30 on MB04 front connector.
13-1	ERR_MB04_1_SHORT_PWROUT11	Short circuit in the power output stage POP 1		Disconnect cable from MB04 board front connector. Check for a short between pins b8 and d8 in cable.	Repair short in cable. Replace MB04 board

Table 9-6. Electronic Control Unit Fault Code Troubleshooting (cont'd.)

MMI Code	Symptom	Probable Cause	Tests	Checks	Corrective Action
23-1	ERR_MB04_1_SHORT_PWROUT 12	Short circuit in the power output stage POP 2		Disconnect cable from MB04 board front connector. Check for a short between pins b8 and z8 in cable.	Repair short in cable. Replace MB04 board
33-1	ERR_MB04_1_SHORT_PWROUT 21	Short circuit in the power output stage POP 3		Disconnect cable from MB04 board front connector. Check for a short between pins b6 and d6 in cable.	Repair short in cable. Replace MB04 board
43-1	ERR_MB04_1_SHORT_PWROUT 22	Short circuit in the power output stage POP 4		Disconnect cable from MB04 board front connector. Check for a short between pins b6 and z6 in cable.	Repair short in cable. Replace MB04 board
53-1	ERR_MB04_1_SHORT_PWROUT 31	Short circuit in the power output stage POP 5		Disconnect cable from MB04 board front connector. Check for a short between pins b4 and d4 in cable.	Repair short in cable. Replace MB04 board
63-1	ERR_MB04_1_SHORT_PWROUT 32	Short circuit in the power output stage POP 6		Disconnect cable from MB04 board front connector. Check for a short between pins b4 and z4 in cable.	Repair short in cable. Replace MB04 board
73-1	ERR_MB04_1_SHORT_PWROUT 41	Short circuit in the power output stage POP 7		Disconnect cable from MB04 board front connector. Check for a short between pins b2 and d2 in cable.	Repair short in cable. Replace MB04 board
83-1	ERR_MB04_1_SHORT_PWROUT 42	Short circuit in the power output stage POP 8		Disconnect cable from MB04 board front connector. Check for a short between pins b2 and z2 in cable.	Repair short in cable. Replace MB04 board

Table 9-6. Electronic Control Unit Fault Code Troubleshooting (cont'd.)

MMI Code	Symptom	Probable Cause	Tests	Checks	Corrective Action
14-1	ERR_MB04_1_OPEN_PWROUT11	Open circuit in the power output stage POP 1		Disconnect cable from MB04 board front connector. Check for an open circuit between pins b8 and d8 in cable.	Repair short in cable. Replace MB04 board
24-1	ERR_MB04_1_OPEN_PWROUT12	Open circuit in the power output stage POP 2		Disconnect cable from MB04 board front connector. Check for an open circuit between pins b8 and z8 in cable.	Repair short in cable. Replace MB04 board
34-1	ERR_MB04_1_OPEN_PWROUT21	Open circuit in the power output stage POP 3	There is no component connected to this power output. This fault should not occur.	Use ST03 to check software version on MB04 board.	Reload software. Replace MB04 board.
44-1	ERR_MB04_1_OPEN_PWROUT22	Open circuit in the power output stage POP 4	There is no component connected to this power output. This fault should not occur.	Use ST03 to check software version on MB04 board.	Reload software. Replace MB04 board.
54-1	ERR_MB04_1_OPEN_PWROUT31	Open circuit in the power output stage POP 5	There is no component connected to this power output. This fault should not occur.	Use ST03 to check software version on MB04 board.	Reload software. Replace MB04 board.
64-1	ERR_MB04_1_OPEN_PWROUT32	Open circuit in the power output stage POP 6	There is no component connected to this power output. This fault should not occur.	Use ST03 to check software version on MB04 board.	Reload software. Replace MB04 board.
74-1	ERR_MB04_1_OPEN_PWROUT41	Open circuit in the power output stage POP 7	There is no component connected to this power output. This fault should not occur.	Use ST03 to check software version on MB04 board.	Reload software. Replace MB04 board.

Table 9-6. Electronic Control Unit Fault Code Troubleshooting (cont'd.)

MMI Code	Symptom	Probable Cause	Tests	Checks	Corrective Action
84-1	ERR_MB04_1_OPEN_PWROUT42	Open circuit in the power output stage POP 8	There is no component connected to this power output. This fault should not occur.	Use ST03 to check software version on MB04 board.	Reload software. Replace MB04 board.
C1-1	ERR_MB04_1_CUTOFF_PWROUT1x	Safety time expired for one of the four power outputs			Remove short from one of the four power outputs POP 1 through POP 4 as indicated in Fault Code 13-1, 23-1, 33-1, or 43-1. Replace MB04 board.
C2-1	ERR_MB04_1_CUTOFF_PWROUT2x	Safety time expired for one of the four power outputs			Remove short from one of the four power outputs POP 5 through POP 8 as indicated in Fault Code 53-1, 63-1, 73-1, or 83-1. Replace MB04 board.
EF-1	ERR_MB04_1_ECU_FAILURE	Failsafe path or monitoring processor is down		Use ST03 to check software version on MB04 board.	Reload software. Replace MB04 board.
CC-4	ERR_EB02_4_CAN_COM	Communication error on ESRA system bus		Use ST03 to check software version on MB04 board.	Reload software. Replace MB04 board. Replace EB02 board.
NA-4	ERR_EB02_4_NV_ACCESS	Error by reading net variable		Use ST03 to check software version on MB04 board.	Reload software. Replace MB04 board. Replace EB02 board.

Table 9-6. Electronic Control Unit Fault Code Troubleshooting (cont'd.)

MMI Code	Symptom	Probable Cause	Tests	Checks	Corrective Action
TO-4	ERR_EB02_4_NV_TIMEOUT	The EB02_4 board reports this error when it is unable to receive at least one of the expected network variables with the initial setpoints		Use ST03 to check software version on MB04 board.	Reload software. Replace EB02 board.
IO-4	ERR_EB02_4_DRV_IO_ACCESS	Error reading inputs or writing outputs of this board		Use ST03 to check software version on MB04 board.	Reload software. Replace MB04 board. Replace EB02 board.
AF-4	ERR_EB02_4_ACTIVATE_FCT	Function activation error		Use ST03 to check software version on MB04 board.	Reload software. Replace MB04 board. Replace EB02 board.
CF-4	ERR_EB02_4_CONFIGURATION	Software configuration error		Use ST03 to check software version on MB04 board.	Reload software. Replace MB04 board. Replace EB02 board.
ER-4	ERR_EB02_4_EEP_FAILURE	EEPROM defective		Use ST03 to check software version on MB04 board.	Reload software. Replace MB04 board. Replace EB02 board.
X1-4	ERR_EB02_4_BOARD_CODING	Coding via front plug does not match internally stored node number		Disconnect cable from EB02 board front connector. Check that a jumper is installed between pins d32 and b30 on EB02 front connector.	Install jumper between pins d32 and b30 on EB02 front connector.

Table 9-6. Electronic Control Unit Fault Code Troubleshooting (cont'd.)

MMI Code	Symptom	Probable Cause	Tests	Checks	Corrective Action
SR04	ERR_SLAVE_REP_TIMEOUT_EB02_4	Incorrect software installed Defective board Defective backplane		Use ST03 to check software version on MB04 board.	Reload software. Replace MB04 board. Replace EB02 board. Replace ECU.
SC04	ERR_SLC_CFG_EB02_4	Incorrect software installed Defective board Defective backplane		Use ST03 to check software version on MB04 board.	Reload software. Replace MB04 board. Replace EB02 board. Replace ECU.
0225	ERR_KN_2_NV_25_TIMEOUT	Incorrect software installed Defective board Defective backplane		Use ST03 to check software version on MB04 board and MB03 board.	Reload software. Replace MB03 board. **The MB04 board is typically not the cause of this fault.**
0304	ERR_KN_3_NV_4_TIMEOUT	Incorrect software installed Defective board Defective backplane		Use ST03 to check software version on MB04 board and MB03 board.	Reload software. Replace MB03 board. **The MB04 board is typically not the cause of this fault.**
0403	ERR_KN_4_NV_3_TIMEOUT	Incorrect software installed Defective board Defective backplane		Use ST03 to check software version on MB04 board and MB03 board.	Reload software. Replace MB03 board. **The MB04 board is typically not the cause of this fault.**

Table 9-6. Electronic Control Unit Fault Code Troubleshooting (cont'd.)

MMI Code	Symptom	Probable Cause	Tests	Checks	Corrective Action
2211	ERR_KN_22_NV_11_TIMEOUT	Incorrect software installed Defective board Defective backplane		Use ST03 to check software version on MB04 board and CB09 board.	Reload software. Replace CB09 board. **The MB04 board is typically not the cause of this fault.**
2222	ERR_KN_22_NV_22_TIMEOUT	Incorrect software installed Defective board Defective backplane		Use ST03 to check software version on MB04 board and CB09 board.	Reload software. Replace CB09 board. **The MB04 board is typically not the cause of this fault.**
DCLC	DIA_PRC_CONFIG	Pressure regulator function detected a configuration error		Use ST03 to check software version on MB04 board.	Reload software. Replace MB04 board.
DCLO	DIA_PRC_OFFSET	The measured pressure is less than -200mbar (negative offset) or At least 4 seconds have expired since the pressure dropped below 0.6bar with the dump valve open and the measured pressure greater than 200mbar (positive offset too great)		Use ST03 to check software version on MB04 board. Use ST03 to check pressure	Check the wiring Check the pneumatics Finally replace board.

Table 9-6. Electronic Control Unit Fault Code Troubleshooting (cont'd.)

MMI Code	Symptom	Probable Cause	Tests	Checks	Corrective Action
DCLD	DIA_PRC_DEVIATION	The stationary system pressure deviation is greater than 0.5 bar (7.25 PSI) There are dynamic deviations from the reference model. The error is signaled at the latest after twice the expected time during which the system deviation should have been less than 0.5bar (7.25 PSI).			Check for correct S/W Check the wiring between ECU and BCU. Check the pneumatics Finally replace board.
GRP1	ERR_MB04_1_GENERAL_ERROR	Internal Card Errors occurred on the MB04. This fault accompanies the following faults: MB04_1_CAN_COM; MB04_1_NV_ACCESS; MB04_1_NV_TIMEOUT; MB04_1_DRV_IO_ACCESS; MB04_1_ACTIVATE_FCT; MB04_1_CONFIGURATION; MB04_1_EEP_FAILURE; MB04_1_BOARD_CODING.			Refer to individual event entry

Table 9-6. Electronic Control Unit Fault Code Troubleshooting (cont'd.)

MMI Code	Symptom	Probable Cause	Tests	Checks	Corrective Action
GRP4	ERR_EB02_4_GENERAL_ERROR	Internal Card Errors occurred on the EB02. This fault accompanies the following faults: EB02_4_CAN_COM; EB02_4_NV_ACCESS; EB02_4_NV_TIMEOUT; EB02_4_IO_ACCESS; EB02_4_ACTIVATE_FCT; EB02_4_CONFIGURATION; EB02_4_EEP_FAILURE; EB02_4_BOARD_CODING.			Refer to individual event entry
MRPL	ERR_MAIN_RESERVOIR_PRES_LOW (only applicable for Center Truck)	Main Reservoir Pressure is below 90psi and the car is moving.			Refer to Table 9-2.
MRRL	ERR_MAIN_RESERVOIR_RATE_LOW (only applicable for Center Truck)	Low charging rate. Compressor is not charging the system.			Refer to Table 9-2.
TLMM	ERR_TRAINLINE_MISMATCH	Trainline mismatch; master controller calling for propulsion and braking simultaneously.		Confirm correct operation of master controller and confirm there are no wiring problems	Replace master controller Repair faulty wiring.
BCIV	ERR_BRKCYLNTRAN_INVALID	Signal from brake cylinder transducer is less than 3.8 mA or greater than 21 mA.		Use ST03 to check signal from brake cylinder transducer. Check wiring between brake cylinder transducer and MB04 board.	Replace faulty brake cylinder transducer. Repair faulty wiring. Replace MB04 board.

Table 9-6. Electronic Control Unit Fault Code Troubleshooting (cont'd.)

MMI Code	Symptom	Probable Cause	Tests	Checks	Corrective Action
PBED	ERR_NO_PBED_SIGNAL	PWM signal is less than 1% while not in limp home mode and not in stand still mode.		Check PBED source. Check wiring.	
CVIV	ERR_CONTROLVOLTRAN_INVALID	Signal from control volume transducer is less than 3.8 mA or greater than 21 mA.		Use ST03 to check signal from control volume transducer. Check wiring between control volume transducer and MB04 board.	Replace faulty control volume transducer. Repair faulty wiring. Replace MB04 board.
PBCF	ERR_PARKBRAKECIRCUIT_FAULT	The park brake switches have reported an impossible situation, both applied and released.		Use ST03 to check signals from PB Apply PS and PB Release PS. Check for short and open circuits in wiring between PB Apply PS and PB Release PS and the ECU.	Replace faulty pressure switch. Repair faulty wiring. Reload software on MB04 board. Replace EB02 board. Replace MB04 board
CVDV	ERR_CONTROLDEVIATION_FAULT	The ECU's target pressure and the resulting pressure (brake cylinder) are outside of the acceptable range + 5 to -5 PSI.		Ensure all cutout cocks are in their normal operating positions and are not leaking air from vents.	Replace any leaking cutout cocks.
				Use ST03 to check signals from control volume transducer and brake cylinder transducer.	If pressure readings are not similar, check wiring between transducers and MB04 board.

Table 9-6. Electronic Control Unit Fault Code Troubleshooting (cont'd.)

MMI Code	Symptom	Probable Cause	Tests	Checks	Corrective Action
CVDV	ERR_CONTROLDEVIATION_FAULT	The ECU's target pressure and the resulting pressure (brake cylinder) are outside of the acceptable range + 5 to -5 PSI.		Use pressure gauge to check control volume pressures at CV1, CV2, and CV3.All three control volume pressures should be similar and match the pressure reading from control volume transducer.	If pressure gauge readings are similar and one pressure transducer reading is not similar, replace faulty pressure transducer.
				Use ST03 and a pressure gauge on CV1 test point to check operation of AMV and RMV (both RMVs on MT).	If AMV or an RMV does not react appropriately, replace faulty AMV or RMV.
				Use ST03 and pressure gauge on CV2 test point to check operation of friction brake cutout valve.	If friction brake cutout valve does not operate correctly, replace cutout valve.
				Use ST03 and pressure gauge on park brake test point to check operation of park brake magnet valve.	If park brake magnet valve does not operate correctly or leaks when it should be closed, replace park brake magnet valve.
				Using two pressure gauges, compare pressure at brake cylinder test point and control volume 3 test point.	If pressure at brake cylinder test point and control volume test point are not similar, replace relay valve.
				Use ST03 to activate emergency magnet valve and ensure brake cylinder pressure is at full emergency brake pressure.	If emergency magnet valve does not properly vent pressure and establish full emergency brake, replace emergency magnet valve.

Table 9-6. Electronic Control Unit Fault Code Troubleshooting (cont'd.)

MMI Code	Symptom	Probable Cause	Tests	Checks	Corrective Action
COMV	ERR_TRAINMOVEDCUTOUT	The friction brakes on this truck were disabled when the train was moved.		Check that truck is not cut out. Use ST03 to check cut out signals. Check wiring between cutouts and EB02 board.	Deactivate cutout. Troubleshoot faulty cutout. Repair faulty wiring. Replace EB02 board. Replace MB04 board.
LDOR	ERR_LOAD_SIGNAL_OOR	The ECUs load signal is out of range 36.3 to 79.8 PSI (5 to11 ma).		Use ST03 to check signal from load weight transducer. Check wiring between load weight transducer and MB04 board.	Replace faulty load weight transducer. Repair faulty wiring. Replace MB04 board.
LDIV	ERR_LOAD_SIGNAL_INVALID	The ECUs load signal is out of range 25.4 to 148.6 PSI (3.5 to 20.5) ma.		Use ST03 to check signal from load weight transducer. Check wiring between load weight transducer and MB04 board.	Replace faulty load weight transducer. Repair faulty wiring. Replace MB04 board.
ECOA	ERR_ELEC_CUTOUT_ACTIVE	ECU has detected that the friction brake electrical cutout has been activated.		Check that electrical cutout is not active Use ST03 to check signal from electrical cutout. Check wiring between electrical cutout and EB02 board.	Deactivate electrical cutout. Troubleshoot faulty electrical cutout. Repair faulty wiring. Replace EB02 board. Replace MB04 board.

Table 9-6. Electronic Control Unit Fault Code Troubleshooting (cont'd.)

MMI Code	Symptom	Probable Cause	Tests	Checks	Corrective Action
MCOA	ERR_MECH_CUTOUT_ACTIVE	ECU has detected that the friction brake mechanical cutout has been activated.		Check that mechanical cutout is not active Use ST03 to check signal from mechanical cutout. Check wiring between mechanical cutout and EB02 board.	Deactivate mechanical cutout. Troubleshoot faulty mechanical cutout. Repair faulty wiring. Replace EB02 board. Replace MB04 board.
	MB03_02 (Node 2) Faults				
CC-2	ERR_MB03_2_CAN_COM	Communication error on ESRA system bus		Use ST03 to check software version on MB03 board.	Reload software. Replace MB03 board.
NA-2	ERR_MB03_2_NV_ACCESS	Error by reading net variable		Use ST03 to check software version on MB03 board.	Reload software. Replace MB03 board.
TO-2	ERR_MB03_2_NV_TIMEOUT	The MB03_2 board reports this error when it is unable to receive at least one of the expected network variables with the initial setpoints		Use ST03 to check communication between the MB03 board and the other ECU boards.	Replace the board that is not communicating with the MB03 board
IO-2	ERR_MB03_2_DRV_IO_ACCESS	Error reading inputs or writing outputs of this board		Use ST03 to check software version on MB03 board.	Reload software. Replace MB03 board.
AF-2	ERR_MB03_2_ACTIVATE_FCT	Function activation error		Use ST03 to check software version on MB03 board.	Reload software. Replace MB03 board.
CF-2	ERR_MB03_2_CONFIGURATION	Software configuration error		Use ST03 to check software version on MB03 board.	Reload software. Replace MB03 board.

Table 9-6. Electronic Control Unit Fault Code Troubleshooting (cont'd.)

MMI Code	Symptom	Probable Cause	Tests	Checks	Corrective Action
ER-2	ERR_MB03_2_EEP_FAILURE	EEPROM defective		Use ST03 to check software version on MB03 board.	Reload software. Replace MB03 board.
X1-2	ERR_MB03_2_BOARD_CODING	Coding via front plug does not match internally stored node number		Disconnect cable from MB03 board front connector. Check that jumpers are installed between pins z28, z30, b30, and b32 on MB03 front connector.	Install jumper between pins z28, z30, b30, and b32 on MB03 front connector.
GRP2	ERR_MB03_2_GENERAL_ERROR	Internal Card Errors occurred on the MB03. This fault accompanies the following faults: MB03_2_CAN_COM; MB03_2_NV_ACCESS; MB03_2_NV_TIMEOUT: MB03_2_DRV_IO_ACCESS; MB03_2_ACTIVATE__FCT; MB03_2_CONFIGURATION; MB03_2_EEP_FAILURE; MB03_2_BOARD_CODING.			Refer to individual event entry
13-2	ERR_MB03_2_SHORT_PWROUT11	Short circuit in the power output stage POP 1		Disconnect cable from MB03 board front connector. Check for a short between pins b8 and d8 in cable.	Repair short in cable. Replace MB03 board
23-2	ERR_MB03_2_SHORT_PWROUT12	Short circuit in the power output stage POP 2		Disconnect cable from MB03 board front connector. Check for a short between pins b8 and z8 in cable.	Repair short in cable. Replace MB03 board

Table 9-6. Electronic Control Unit Fault Code Troubleshooting (cont'd.)

MMI Code	Symptom	Probable Cause	Tests	Checks	Corrective Action
33-2	ERR_MB03_2_SHORT_PWROUT21	Short circuit in the power output stage POP 3		Disconnect cable from MB03 board front connector. Check for a short between pins b6 and d6 in cable.	Repair short in cable. Replace MB03 board
43-2	ERR_MB03_2_SHORT_PWROUT22	Short circuit in the power output stage POP 4		Disconnect cable from MB03 board front connector. Check for a short between pins b6 and z6 in cable.	Repair short in cable. Replace MB03 board
53-2	ERR_MB03_2_SHORT_PWROUT31	Short circuit in the power output stage POP 5		Disconnect cable from MB03 board front connector. Check for a short between pins b4 and d4 in cable.	Repair short in cable. Replace MB03 board
63-2	ERR_MB03_2_SHORT_PWROUT32	Short circuit in the power output stage POP 6		Disconnect cable from MB03 board front connector. Check for a short between pins b4 and z4 in cable.	Repair short in cable. Replace MB03 board
73-2	ERR_MB03_2_SHORT_PWROUT41	Short circuit in the power output stage POP 7		Disconnect cable from MB03 board front connector. Check for a short between pins b2 and d2 in cable.	Repair short in cable. Replace MB03 board
83-2	ERR_MB03_2_SHORT_PWROUT42	Short circuit in the power output stage POP 8		Disconnect cable from MB03 board front connector. Check for a short between pins b2 and z2 in cable.	Repair short in cable. Replace MB03 board
14-2	ERR_MB03_2_OPEN_PWROUT11	Open circuit in the power output stage POP 1		Disconnect cable from MB03 board front connector. Check for an open circuit between pins b8 and d8 in cable.	Repair short in cable. Replace MB03 board

Table 9-6. Electronic Control Unit Fault Code Troubleshooting (cont'd.)

MMI Code	Symptom	Probable Cause	Tests	Checks	Corrective Action
24-2	ERR_MB03_2_OPEN_PWROUT12	Open circuit in the power output stage POP 2		Disconnect cable from MB03 board front connector. Check for an open circuit between pins b8 and z8 in cable.	Repair short in cable. Replace MB03 board
34-2	ERR_MB03_2_OPEN_PWROUT21	Open circuit in the power output stage POP 3	There is no component connected to this power output. This fault should not occur.	Use ST03 to check software version on MB03 board.	Reload software. Replace MB03 board.
44-2	ERR_MB03_2_OPEN_PWROUT22	Open circuit in the power output stage POP 4	There is no component connected to this power output. This fault should not occur.	Use ST03 to check software version on MB03 board.	Reload software. Replace MB03 board.
54-2	ERR_MB03_2_OPEN_PWROUT31	Open circuit in the power output stage POP 5	There is no component connected to this power output. This fault should not occur.	Use ST03 to check software version on MB03 board.	Reload software. Replace MB03 board.
64-2	ERR_MB03_2_OPEN_PWROUT32	Open circuit in the power output stage POP 6	There is no component connected to this power output. This fault should not occur.	Use ST03 to check software version on MB03 board.	Reload software. Replace MB03 board.
74-2	ERR_MB03_2_OPEN_PWROUT41	Open circuit in the power output stage POP 7	There is no component connected to this power output. This fault should not occur.	Use ST03 to check software version on MB03 board.	Reload software. Replace MB03 board.
84-2	ERR_MB03_2_OPEN_PWROUT42	Open circuit in the power output stage POP 8	There is no component connected to this power output. This fault should not occur.	Use ST03 to check software version on MB03 board.	Reload software. Replace MB03 board.

Table 9-6. Electronic Control Unit Fault Code Troubleshooting (cont'd.)

MMI Code	Symptom	Probable Cause	Tests	Checks	Corrective Action
C1-2	ERR_MB03_2_CUTOFF_PWROUT1x	Safety time expired for one of the four power outputs			Remove short from one of the four power outputs POP 1 through POP 4 as indicated in Fault Code 13-2, 23-2, 33-2, or 43-2. Replace MB03 board
C2-2	ERR_MB03_2_CUTOFF_PWROUT2x	Safety time expired for one of the four power outputs			Remove short from one of the four power outputs POP 5 through POP 8 as indicated in Fault Code 53-2, 63-2, 73-2, or 83-2 Replace MB03 board
EF-2	ERR_MB03_2_ECU_FAILURE	Failsafe path or monitoring processor is down		Use ST03 to check software version on MB03 board.	Reload software. Replace MB03 board.
CC-3	ERR_EB01_3_CAN_COM	Communication error on ESRA system bus		Use ST03 to check software version on MB03 board.	Reload software. Replace MB03 board. Replace EB01 board.
NA-3	ERR_EB01_3_NV_ACCESS	Error by reading net variable		Use ST03 to check software version on MB03 board.	Reload software. Replace MB03 board. Replace EB01 board.
TO-3	ERR_EB01_3_NV_TIMEOUT	The MB03_1 board reports this error when it is unable to receive at least one of the expected network variables with the initial setpoints.		Use ST03 to check software version on MB03 board.	Reload software. Replace EB01 board.

Table 9-6. Electronic Control Unit Fault Code Troubleshooting (cont'd.)

MMI Code	Symptom	Probable Cause	Tests	Checks	Corrective Action
IO-3	ERR_EB01_3_DRV_IO_ACCESS	Error reading inputs or writing outputs of this board.		Use ST03 to check software version on MB03 board.	Reload software. Replace MB03 board. Replace EB01 board.
AF-3	ERR_EB01_3_ACTIVATE_FCT	Function activation error.		Use ST03 to check software version on MB03 board.	Reload software. Replace MB03 board. Replace EB01 board.
CF-3	ERR_EB01_3_CONFIGURATION	Software configuration error.		Use ST03 to check software version on MB03 board.	Reload software. Replace MB03 board. Replace EB01 board.
ER-3	ERR_EB01_3_EEP_FAILURE	EEPROM defective.		Use ST03 to check software version on MB03 board.	Reload software. Replace MB03 board. Replace EB01 board.
X1-3	ERR_EB01_3_BOARD_CODING	Coding via front plug does not match internally stored node number.		Disconnect cable from EB01 board front connector. Check that jumpers are installed between pins b30, z30, b32, and z32 on EB01 front connector.	Install jumpers between pins b30, z30, b32, and z32 on EB01 front connector.

Table 9-6. Electronic Control Unit Fault Code Troubleshooting (cont'd.)

MMI Code	Symptom	Probable Cause	Tests	Checks	Corrective Action
GRP3	ERR_EB01_3_GENERAL_ERROR	Internal Card Errors occurred on the EB01. This fault accompanies the following faults: EB01_3_CAN_COM; EB01_3_NV_ACCESS; EB01_3_NV_TIMEOUT; EB01_3_DRV_IO_ACCESS; EB01_3_ACTIVATE_FCT; EB01_3_CONFIGURATION; EB01_3_EEP_FAILURE; EB01_3_BOARD_CODING.			Refer to individual event entry
R0-3	ERR_EB01_3_RELAY0	ECU extension board relay 1 defective.			Replace EB01 board.
R1-3	ERR_EB01_3_RELAY1	ECU extension board relay 2 defective.			Replace EB01 board.
R2-3	ERR_EB01_3_RELAY2	ECU extension board relay 3 defective.			Replace EB01 board.
R3-3	ERR_EB01_3_RELAY3	ECU extension board relay 4 defective.			Replace EB01 board.
R4-3	ERR_EB01_3_RELAY4	ECU extension board relay 5 defective.			Replace EB01 board.
R5-3	ERR_EB01_3_RELAY5	ECU extension board relay 6 defective.			Replace EB01 board.
R6-3	ERR_EB01_3_RELAY6	ECU extension board relay 7 defective.			Replace EB01 board.
R7-3	ERR_EB01_3_RELAY7	ECU extension board relay 8 defective.			Replace EB01 board.

Table 9-6. Electronic Control Unit Fault Code Troubleshooting (cont'd.)

MMI Code	Symptom	Probable Cause	Tests	Checks	Corrective Action
WD-3	ERR_EB01_3_IO_WATCHDOG	I/O Watchdog timer error.		Use ST03 to check software version on MB03 board.	Reload software. Replace MB03 board. Replace EB01 board.
SR03	ERR_SLAVE_REP_TIMEOUT_EB01_3	Internal CAN bus Communication timeout.		Use ST03 to check software version on MB03 board.	Reload software. Replace MB03 board. Replace EB01 board.
SC03	ERR_SLC_CFG_EB01_3	Slave configuration error.		Use ST03 to check software version on MB03 board.	Reload software. Replace MB03 board. Replace EB01 board.
0103	ERR_KN_1_NV_3_TIMEOUT	Internal CAN bus Communication timeout.		Use ST03 to check software version on MB04 board and MB03 board.	Reload software. Replace MB04 board. **The MB03 board is typically not the cause of this fault.**
0304	ERR_KN_3_NV_4_TIMEOUT	Internal CAN bus Communication timeout.		Use ST03 to check software version on MB04 board and MB03 board.	Reload software. Replace MB03 board. Replace MB04 board.
0403	ERR_KN_4_NV_3_TIMEOUT	Internal CAN bus Communication timeout.		Use ST03 to check software version on MB04 board and MB03 board.	Reload software. Replace MB03 board. Replace MB04 board.

Table 9-6. Electronic Control Unit Fault Code Troubleshooting (cont'd.)

MMI Code	Symptom	Probable Cause	Tests	Checks	Corrective Action
2224	ERR_KN_22_NV_24_TIMEOUT	Internal CAN bus Communication timeout.		Use ST03 to check software version on MB03 board and CB09 board.	Reload software. Replace CB09 board. **The MB03 board is typically not the cause of this fault.**
70	ERR_70_WSP	Error occurs if all speed sensors are disturbed or the BOARD_CODING is faulty or the configuration of the extension board is faulty.		Use ST03 to check software version on MB03 board. Use ST03 to verify speed sensor signals are being received and car is at 0 mph. Check wiring between speed sensors and MB03 board.	Reload software. Replace faulty speed sensor. Repair faulty wiring. Replace MB03 board.
72	ERR_72_WSP	Error occurs if there is a speed sensor problem at just one axle.		Use ST03 to check software version on MB03 board. Use ST03 to verify speed sensor signals are being received and car is at 0 mph. Check wiring between speed sensors and MB03 board.	Reload software. Replace faulty speed sensor. Repair faulty wiring. Replace MB03 board.

Table 9-6. Electronic Control Unit Fault Code Troubleshooting (cont'd.)

MMI Code	Symptom	Probable Cause	Tests	Checks	Corrective Action
73	ERR_73_WSP	Error occurs if there is a speed sensor problem at more than one axle.		Use ST03 to check software version on MB03 board. Use ST03 to verify speed sensor signals are being received and car is at 0 mph. Check wiring between speed sensors and MB03 board.	Reload software. Replace faulty speed sensor. Repair faulty wiring. Replace MB03 board.
A1	ERR_MB_WSP	Internal WSP error.		Use ST03 to check software version on MB03 board. Use ST03 to verify speed sensor signals are being received and car is at 0 mph. Check wiring between speed sensors and MB03 board.	Reload software. Replace faulty speed sensor. Repair faulty wiring. Replace MB03 board.

Table 9-6. Electronic Control Unit Fault Code Troubleshooting (cont'd.)

MMI Code	Symptom	Probable Cause	Tests	Checks	Corrective Action
10	ERR_TIMEOUT_1_WSP	Dump Valve timeout for axle 1 has occurred		Use ST03 to check software version on MB03 board. Use ST03 to verify speed sensor signals are being received and car is at 0 mph. Check wiring between speed sensors and MB03 board. Use ST03 to check operation of anti-skid valve. Check wiring between MB03 board and anti-skid valve.	Reload software. Replace faulty speed sensor. Replace faulty anti-skid valve. Repair faulty wiring. Replace MB03 board.
20	ERR_TIMEOUT_2_WSP	Dump Valve timeout for axle 2 has occurred		Use ST03 to check software version on MB03 board. Use ST03 to verify speed sensor signals are being received and car is at 0 mph. Check wiring between speed sensors and MB03 board. Use ST03 to check operation of anti-skid valve. Check wiring between MB03 board and anti-skid valve.	Reload software. Replace faulty speed sensor. Replace faulty anti-skid valve. Repair faulty wiring. Replace MB03 board.

Table 9-6. Electronic Control Unit Fault Code Troubleshooting (cont'd.)

MMI Code	Symptom	Probable Cause	Tests	Checks	Corrective Action
30	ERR_TIMEOUT_3_WSP	Dump Valve timeout for axle 3 has occurred		Use ST03 to check software version on MB03 board. Use ST03 to verify speed sensor signals are being received and car is at 0 mph. Check wiring between speed sensors and MB03 board. Use ST03 to check operation of anti-skid valve. Check wiring between MB03 board and anti-skid valve.	Reload software. Replace faulty speed sensor. Replace faulty anti-skid valve. Repair faulty wiring. Replace MB03 board.
40	ERR_TIMEOUT_4_WSP	Dump Valve timeout for axle 4 has occurred		Use ST03 to check software version on MB03 board. Use ST03 to verify speed sensor signals are being received and car is at 0 mph. Check wiring between speed sensors and MB03 board. Use ST03 to check operation of anti-skid valve. Check wiring between MB03 board and anti-skid valve.	Reload software. Replace faulty speed sensor. Replace faulty anti-skid valve. Repair faulty wiring. Replace MB03 board.

Table 9-6. Electronic Control Unit Fault Code Troubleshooting (cont'd.)

MMI Code	Symptom	Probable Cause	Tests	Checks	Corrective Action
11	ERR_FSI_1_WSP	Defective or improperly gapped speed sensor and/or faulty wiring to sensor		Check gap between axle 1 speed sensor and pole wheel. Use ST03 to verify axle 1 speed sensor signals are being received and car is at 0 mph. Check wiring between axle 1 speed sensor and MB03 board.	Adjust axle 1 speed sensor gap. Replace faulty axle 1 speed sensor. Repair faulty wiring. Replace MB03 board.
21	ERR_FSI_2_WSP	Defective or improperly gapped speed sensor and/or faulty wiring to sensor		Check gap between axle 2 speed sensor and pole wheel. Use ST03 to verify axle 2 speed sensor signals are being received and car is at 0 mph. Check wiring between axle 2 speed sensor and MB03 board.	Adjust axle 2 speed sensor gap. Replace faulty axle 2 speed sensor. Repair faulty wiring. Replace MB03 board.
31	ERR_FSI_3_WSP	Defective or improperly gapped speed sensor and/or faulty wiring to sensor		Check gap between axle 3 speed sensor and pole wheel. Use ST03 to verify axle 3 speed sensor signals are being received and car is at 0 mph. Check wiring between axle 3 speed sensor and MB03 board.	Adjust axle 3 speed sensor gap. Replace faulty axle 3 speed sensor. Repair faulty wiring. Replace MB03 board.

Table 9-6. Electronic Control Unit Fault Code Troubleshooting (cont'd.)

MMI Code	Symptom	Probable Cause	Tests	Checks	Corrective Action
41	ERR_FSI_4_WSP	Defective or improperly gapped speed sensor and/or faulty wiring to sensor		Check gap between axle 4 speed sensor and pole wheel. Use ST03 to verify axle 4 speed sensor signals are being received and car is at 0 mph. Check wiring between axle 4 speed sensor and MB03 board.	Adjust axle 4 speed sensor gap. Replace faulty axle 4 speed sensor. Repair faulty wiring. Replace MB03 board.
12	ERR_DV_1_WSP	Error is the result of the validity check between all sensor speed signals. The check includes several tests to detect when a sensor is producing a faulty frequency output, i.e. ((40% of Vref) + 3km/h) for 3 seconds in braking, ((40% of Vref) + 3km/h) for 3 seconds in driving		Check gap between axle 1 speed sensor and pole wheel. Use ST03 to verify axle 1 speed sensor signals are being received and car is at 0 mph. Check wiring between axle 1 speed sensor and MB03 board.	Adjust axle 1 speed sensor gap. Replace faulty axle 1 speed sensor. Repair faulty wiring. Replace MB03 board.
22	ERR_DV_2_WSP	Error is the result of the validity check between all sensor speed signals. The check includes several tests to detect when a sensor is producing a faulty frequency output, i.e. ((40% of Vref) + 3km/h) for 3 seconds in braking, ((40% of Vref) + 3km/h) for 3 seconds in driving		Check gap between axle 2 speed sensor and pole wheel. Use ST03 to verify axle 2 speed sensor signals are being received and car is at 0 mph. Check wiring between axle 2 speed sensor and MB03 board.	Adjust axle 2 speed sensor gap. Replace faulty axle 2 speed sensor. Repair faulty wiring. Replace MB03 board.

Table 9-6. Electronic Control Unit Fault Code Troubleshooting (cont'd.)

MMI Code	Symptom	Probable Cause	Tests	Checks	Corrective Action
32	ERR_DV_3_WSP	Error is the result of the validity check between all sensor speed signals. The check includes several tests to detect when a sensor is producing a faulty frequency output, i.e. ((40% of Vref) + 3km/h) for 3 seconds in braking, ((40% of Vref) + 3km/h) for 3 seconds in driving		Check gap between axle 3 speed sensor and pole wheel. Use ST03 to verify axle 3 speed sensor signals are being received and car is at 0 mph. Check wiring between axle 3 speed sensor and MB03 board.	Adjust axle 3 speed sensor gap. Replace faulty axle 3 speed sensor. Repair faulty wiring. Replace MB03 board.
42	ERR_DV_4_WSP	Error is the result of the validity check between all sensor speed signals. The check includes several tests to detect when a sensor is producing a faulty frequency output, i.e. ((40% of Vref) + 3km/h) for 3 seconds in braking, ((40% of Vref) + 3km/h) for 3 seconds in driving		Check gap between axle 4 speed sensor and pole wheel. Use ST03 to verify axle 4 speed sensor signals are being received and car is at 0 mph. Check wiring between axle 4 speed sensor and MB03 board.	Adjust axle 4 speed sensor gap. Replace faulty axle 4 speed sensor. Repair faulty wiring. Replace MB03 board.
13	ERR_SHORT_VALVE1_WSP	Short circuit in the power output stage POP11		Disconnect cable from MB03 board front connector. Check for a short between pins b8 and d8 in cable.	Repair short in cable. Replace MB03 board
14	ERR_OPEN_VALVE1_WSP	Open circuit in the power output stage POP11		Disconnect cable from MB03 board front connector. Check for an open circuit between pins b8 and d8 in cable.	Repair short in cable. Replace MB03 board
15	ERR_UWR_TIMEOUT_1_WSP	The safety monitor was deemed defective during the WSP test run			Replace MB03 board

Table 9-6. Electronic Control Unit Fault Code Troubleshooting (cont'd.)

MMI Code	Symptom	Probable Cause	Tests	Checks	Corrective Action
17	ERR_LOGIC_TIMEOUT_1_WSP	Indicates that the maximum admissible actuation time has exceeded for controlling the wheel slip and the WSP control has been aborted for axle 1			Not typically caused by hardware malfunction but is an indication of extremely low adhesion conditions
18	ERR_WHEELSET_1_WSP	Group error for wheel-set 1. One or more faults related to WSP on axle 1 has occurred.			Troubleshoot individual WSP faults
NMMM	ERR_NO_MOTION_MISMATCH	No motion mismatch between relay output and no motion input; only applicable to PT-A		Mismatch between the no motion output and the no motion input received by ESRA.	Troubleshoot no motion signals.
MT01	ERR_ACCESS_TO_MASTERERRORTAB_1	Error reading master error of node 1		Use ST03 to check software version on CB09 board.	Reload software. Replace MB04 board.
MT22	ERR_ACCESS_TO_MASTERERRORTAB_22	Error reading master error of node 22		Use ST03 to check software version on CB09 board.	Reload software. Replace CB09 board.
MT28	ERR_ACCESS_TO_MASTERERRORTAB_28	Error reading master error of node 28		Use ST03 to check software version on CB09 board.	Reload software. Replace CB12 board.
	CB09_22 (Node 22) Faults				
CC22	ERR_CB09_22_CAN_COM	Communication error on ESRA system bus		Use ST03 to check software version on CB09 board.	Reload software. Replace CB09 board.
NA22	ERR_CB09_22_NV_ACCESS	Error by reading net variable		Use ST03 to check software version on CB09 board.	Reload software. Replace CB09 board.

Table 9-6. Electronic Control Unit Fault Code Troubleshooting (cont'd.)

MMI Code	Symptom	Probable Cause	Tests	Checks	Corrective Action
TO22	ERR_CB09_22_NV_TIMEOUT	The CB09_22 board reports this error when it is unable to receive at least one of the expected network variables with the initial setpoints		Use ST03 to check communication between the CB09 board and the other ECU boards.	Replace the board that is not communicating with the CB09 board
IO22	ERR_CB09_22_DRV_IO_ACCESS	Error reading inputs or writing outputs of this board		Use ST03 to check software version on CB09 board.	Reload software. Replace CB09 board.
AF22	ERR_CB09_22_ACTIVATE_FCT	Function activation error		Use ST03 to check software version on CB09 board.	Reload software. Replace CB09 board.
CF22	ERR_CB09_22_CONFIGURATION	Software configuration error		Use ST03 to check software version on CB09 board.	Reload software. Replace CB09 board.
ER22	ERR_CB09_22_EEP_FAILURE	EEPROM defective		Use ST03 to check software version on CB09 board.	Reload software. Replace CB09 board.
GRP5	ERR_CB09_22_GENERAL_ERROR	Internal Card Errors occurred on the CB09. This fault accompanies the following faults: CB09_22_CAN_COM; CB09_22_NV_ACCESS; CB09_22_NV_TIMEOUT; CB09_22_DRV_IO_ACCES; CB09_22_ACTIVATE_FCT; CB09_22_CONFIGURATIO; CB09_22_EEP_FAILURE; CB09_22_BOARD CODING.			Refer to individual event entry

Table 9-6. Electronic Control Unit Fault Code Troubleshooting (cont'd.)

MMI Code	Symptom	Probable Cause	Tests	Checks	Corrective Action
CO22	ERR_CB09_22_CB09_MVBC	The periodic supervision of the MVBC Chip has detected a failure due to abnormal hardware or software behavior		Use ST03 to check software version on CB09 board.	Reload software. Replace CB09 board.
0101	ERR_KN_1_NV_1_TIMEOUT	The CB09 board reports this error when it is unable to receive at least one of the expected network variables with the initial setpoints.		Use ST03 to check communication between the CB09 board and the other ECU boards.	Replace the board that is not communicating with the CB09 board.
0102	ERR_KN_1_NV_2_TIMEOUT	The CB09 board reports this error when it is unable to receive at least one of the expected network variables with the initial setpoints.		Use ST03 to check communication between the CB09 board and the other ECU boards.	Replace the board that is not communicating with the CB09 board.
0203	ERR_KN_2_NV_3_TIMEOUT	The CB09 board reports this error when it is unable to receive at least one of the expected network variables with the initial setpoints.		Use ST03 to check communication between the CB09 board and the other ECU boards.	Replace the board that is not communicating with the CB09 board.
0210	ERR_KN_2_NV_10_TIMEOUT	The CB09 board reports this error when it is unable to receive at least one of the expected network variables with the initial setpoints.		Use ST03 to check communication between the CB09 board and the other ECU boards.	Replace the board that is not communicating with the CB09 board.
2801	ERR_KN_28_NV_1_TIMEOUT	The CB09 board reports this error when it is unable to receive at least one of the expected network variables with the initial setpoints.		Use ST03 to check communication between the CB09 board and the other ECU boards.	Replace the board that is not communicating with the CB09 board.

Table 9-6. Electronic Control Unit Fault Code Troubleshooting (cont'd.)

MMI Code	Symptom	Probable Cause	Tests	Checks	Corrective Action
P100	ERR_MVB_PORT_100	An error has been detected in receiving information on Port 100 of the MVB		Use ST03 to check communication between the CB09 board and the other ECU boards. Use ST03 to check operation of MVB bus.	Replace CB09 board. Replace ECU.
P150	ERR_MVB_PORT_150	An error has been detected in receiving information on Port 150 of the MVB		Use ST03 to check communication between the CB09 board and the other ECU boards. Use ST03 to check operation of MVB bus.	Replace CB09 board. Replace ECU.
P512	ERR_MVB_PORT_512	An error has been detected in receiving information on Port 512 of the MVB		Use ST03 to check communication between the CB09 board and the other ECU boards. Use ST03 to check operation of MVB bus.	Replace CB09 board. Replace ECU.
P640	ERR_MVB_PORT_640	An error has been detected in receiving information on Port 640 of the MVB		Use ST03 to check communication between the CB09 board and the other ECU boards. Use ST03 to check operation of MVB bus.	Replace CB09 board. Replace ECU.

Table 9-6. Electronic Control Unit Fault Code Troubleshooting (cont'd.)

MMI Code	Symptom	Probable Cause	Tests	Checks	Corrective Action
	CB12_28 (Node 28) Faults				
CC28	ERR_CB12_28_CAN_COM	Communication error on ESRA system bus		Use ST03 to check software version on CB12 board.	Reload software. Replace CB12 board.
NA28	ERR_CB12_28_NV_ACCESS	Error by reading net variable		Use ST03 to check software version on CB12 board.	Reload software. Replace CB12 board.
TO28	ERR_CB12_28_NV_TIMEOUT	The CB12_28 board reports this error when it is unable to receive at least one of the expected network variables with the initial setpoints		Use ST03 to check communication between the CB12 board and the other ECU boards.	Replace the board that is not communicating with the CB12 board
IO28	ERR_CB12_28_DRV_IO_ACCESS	Error reading inputs or writing outputs of this board		Use ST03 to check software version on CB12 board.	Reload software. Replace CB12 board.
AF28	ERR_CB12_28_ACTIVATE_FCT	Function activation error		Use ST03 to check software version on CB12 board.	Reload software. Replace CB12 board.
CF28	ERR_CB12_28_CONFIGURATION	Software configuration error		Use ST03 to check software version on CB12 board.	Reload software. Replace CB12 board.
ER28	ERR_CB12_28_EEP_FAILURE	EEPROM defective		Use ST03 to check software version on CB12 board.	Reload software. Replace CB12 board.

Table 9-6. Electronic Control Unit Fault Code Troubleshooting (cont'd.)

MMI Code	Symptom	Probable Cause	Tests	Checks	Corrective Action
GRP6	ERR_CB12_28_GENERAL_ERROR	Internal Card Errors occurred on the CB12. This fault accompanies the following faults: CB12_28_CAN_COM; CB12_28_NV_ACCESS; CB12_28_NV_TIMEOUT; CB12_28_DRV_IO_ACCES; CB12_28_ACTIVATE_FCT; CB12_28_CONFIGURATIO; CB12_28_EEP_FAILURE; CB12_28_BOARD_CODING.			Refer to individual event entry
RTCR	AE_ERR_CB12_28_RTC_READ	The CB12 has detected an error reading the Real Time Clock		Use ST03 to check software version on CB12 board.	Reload software. Replace CB12 board.
0102	AE_ERR_KN_1_NV_2_TIMEOUT_28	Incorrect software installed Defective board Defective backplane		Use ST03 to check software version on CB12 board.	Reload software. Replace CB12 board. Replace MB04 board. Replace ECU.
0210	AE_ERR_KN_2_NV_10_TIMEOUT_28	Incorrect software installed Defective board Defective backplane		Use ST03 to check software version on CB12 board.	Reload software. Replace CB12 board. Replace MB03 board. Replace ECU.

Table 9-6. Electronic Control Unit Fault Code Troubleshooting (cont'd.)

MMI Code	Symptom	Probable Cause	Tests	Checks	Corrective Action
0403	AE_ERR_KN_4_NV_3_TIMEOUT_28	Incorrect software installed Defective board Defective backplane		Use ST03 to check software version on CB12 board.	Reload software. Replace CB12 board. Replace MB04 board. Replace ECU.
2201	AE_ERR_KN_22_NV_1_TIMEOUT_28	Incorrect software installed Defective board Defective backplane		Use ST03 to check software version on CB12 board.	Reload software. Replace CB12 board. Replace CB09 board. Replace ECU.
VM28	ERR_CB12_28_CB12_HWSD	Hardware issue with CB12 card		Use ST03 to check software version on CB12 board.	Reload software. Replace CB12 board.
ET28	ERR_CB12_28_CB12_ETH_HARDWARE	Ethernet Controller faulty		Use ST03 to check software version on CB12 board.	Reload software. Replace CB12 board.

9.2 Diagnostic Detected Failures

The system may develop an operational problem due to a mechanical or an electrical condition. This chapter gives a guide for troubleshooting based on observed problems and using ECU diagnostics.

WARNING

PRINTED CIRCUIT BOARDS SHOULD NOT BE REMOVED WHILE THE FRICTION BRAKE ECU IS UNDER POWER. THIS CAN POSSIBLY DAMAGE THE FRICTION BRAKE ECU.

CAUTION

IF IT IS NECESSARY TO PULL ANY PRINTED CIRCUIT BOARD (PCB) OUT OF THE FRICTION BRAKE ECU, ENSURE THAT THE ECU IS POWERED OFF. VERIFY THAT THE POWER IS REMOVED FROM THE ECU BY REMOVING THE POWER PLUG FROM THE PB01 FRONT PANEL CONNECTOR OR BY TURNING OFF THE APPROPRIATE CIRCUIT BREAKER.

The electronic circuitry is not subject to wear and does not need maintenance. The Friction Brake ECU is designed to execute a continuous self-test of each circuit board to ensure proper system operation. Any errors found during this self-test will be reported via the MMI and Service Terminal output.

Equipment external to the Friction Brake ECU may require long term periodic maintenance checks. This would include but not be limited to speed sensors, pressure transducers, magnet valves, etc.

9.2.1 Events List

This list contains all events that the friction brake ECU will generate. The 4 digit code will be displayed on the MMI's alpha-numeric display and the Event Name will be displayed on the service terminal PTU, see Figure 9-1.

9.2.2 Explanation of the Table(s) of Events

- Man Machine Interface (MMI) Code: this is the 4-digit alpha-numeric code displayed on the front of the MMI that is attached to the MB04B card in the Friction Brake ECU.

- Service Terminal Event Name: this is the event name that will be displayed on the ST03 service terminal PTU

- Priority: This determines significance of the fault when presented on the MMI:
  - 0: Error will not be displayed on MMI
  - 1: Lowest priority to display
  - 4: Highest priority to display

- T-come Time: amount of time the error must be present before it is logged into current memory storage
- T-go Time: amount of time the error must be gone before it is removed from the current memory storage and moved to the transient memory storage
- Possible Cause(s): a list of possible causes of event
- Possible Corrective Action(s): a list of possible (not all) corrective actions
- Read the MD04 on the MMI 4 digit character display code or on the PTU.
- ST03 needs to be used to view the variables.

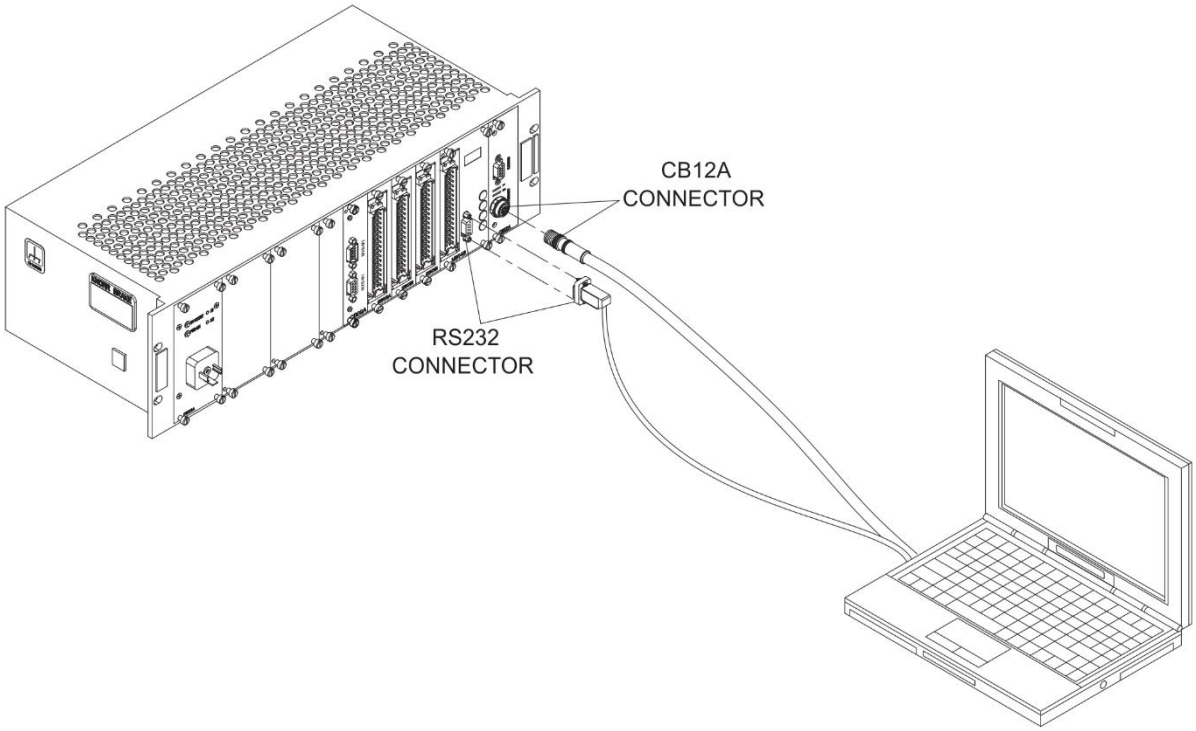

Figure 9-1: PTU Connection

INDEX

A

Air Dryer, 2-17, 9-5
Air Filter (FTL, PBFLT), 2-23
Air Supply Unit, 2-12, 9-3
Apply and Release BCU Magnet Valves, 5-22
Apply and Release Magnet Valve, CT (AMV, RMV), 8-6
Apply and Release Magnet Valve, MT (AMV, RMV), 8-2
ASU Compressor Oil, 6-4
ASU Compressor Oil Level, 5-1
ASU Desiccant Canisters, 6-9

B

BCU Air Filters, 6-7
BCU Pressure Transducers (CVT, LWT, BCT, MRT), 2-37
BCU Test Points, 2-38
Brake Apply and Brake Release Switch (BCA, BCR), 2-39
Brake Caliper, 2-52, 5-19
Brake Control Unit, Center Truck, 2-1
Brake Control Unit, Motor Truck, 2-5
Brake Disc, 2-53, 5-8, 6-17
Brake Pad, 2-54, 5-21, 6-5
Brake Reservoir, 5-5

C

Center Truck BCU Pressure Transducers (BCT, CVT, LWT, MRT), 6-15
Check Valve (CV), 2-21
Circuit Boards, ECU, 6-27
Communications Board CB12A, 2-51
Communications Board, CB09C, 2-51
Compressor Warm-Up, 5-25
Connecting Service Terminal, 2-52
CT BCU Pressure Switches (BCR and BCA), 6-24
Cutout Cock (MRCO, PBMRCO), 2-23

D

Drain ASU Cooler, 6-11
Dump Valve, 2-56, 8-20

E

Electronic Control Unit, 2-41, 5-6
Emergency & Brake Magnet Valves (EMV, PBMV, FBCV), 8-16
Extension Boards EB01 and EB02, 2-50

F

Fault Code, 9-9, 9-10, 9-11, 9-12, 9-13, 9-14, 9-15, 9-16, 9-17, 9-18, 9-19, 9-20, 9-21, 9-22, 9-23, 9-24, 9-25, 9-26, 9-27, 9-28, 9-29, 9-30, 9-31, 9-32, 9-33, 9-34, 9-35, 9-36, 9-37, 9-38, 9-39, 9-40, 9-41, 9-42
Flange Mounted Test Points, 8-11
Friction Brake System Troubleshooting, 9-1, 9-2

H

Hoses on ASU, 5-7

I

Inspect Air Filter Condition, ASU, 5-2
Intake Air Filters, ASU, 6-2

L

Load Limiting Valve (LLV), 2-31, 8-23
Lubrication, 7-1

M

Magnet Valves (EMV, FBCV, PBMV), 2-35
Main Boards, MB03 and MB04, 2-48
Main Reservoir, 5-3
Main Reservoir and Parking Brake Air Filters (PBFLT, FLT), 8-36
Main Reservoir and Parking Brake Cutout Valve (MRCO, PBMRCO), 8-30
Main Reservoir Check Valve (CV), 8-33
Manual Park Brake Release, 2-10
Materials, 4-2
Motor Compressor Unit, 2-15
Motor Truck BCU Pressure Transducers (BCT, CVT, LWT), 6-13
MT BCU Pressure Switches (PBA, PBR, BCA, BCR), 6-22

P

Park Brake Apply and Park Brake Released (PBA, PBR), 2-40
Parking Brake Cutout (PBCO), 8-14
Parking Brake Cutout Valve, 5-24
PBCO Cutout Cock, 2-24
Power Board PB01, 2-50
Preventive Maintenance, 5-1

R

Relay Valve (RV), 2-28, 8-24
Reservoirs, 2-54

S

Safety, 6-1, 8-1
Sanding Equipment, 2-63
Scheduled Maintenance Index, 3-1
Service Terminal, 2-51
Special Tools, 4-1
Speed Sensors, 2-64
Suspension Air Filters, ASU, 6-26

T

Test Points (TP-CV1, TP-CV3, TP-CV4, TP-MR), 8-8

APPENDIX A

TOD Screen

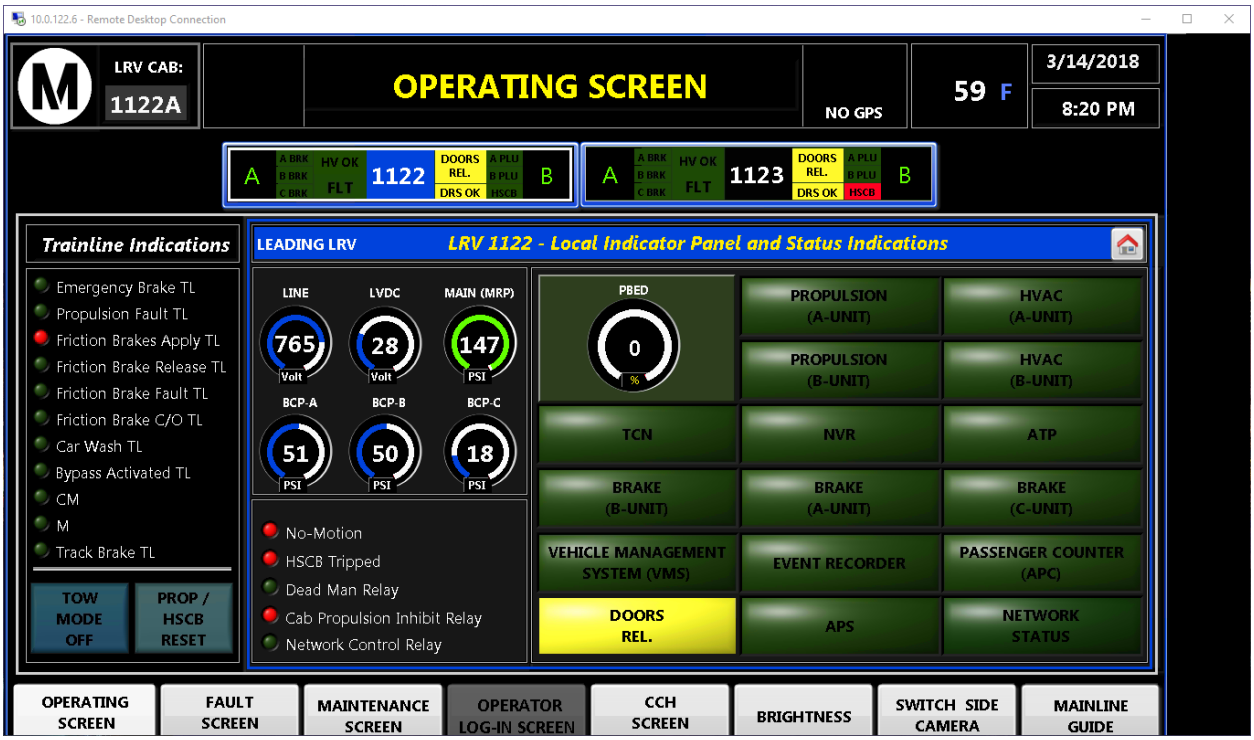

The above TOD screen shows a two-car consist where the doors have been released as the train is stopped. The three BRAKE icons for the A, B, and C units are all green. If the B ECU detected a brake fault the B unit icon would turn red. To see the fault that has occurred one must then select the FAULT SCREEN icon at the bottom.

It should be noted that not all of the faults in the Event Description document that follows will be displayed on the TOD. Only the faults where there is a Y in the TOD column will be sent to the network and displayed on the TOD.

APPENDIX B

LACMTA P3010 Series LRV
Pneumatic Friction Brake System

Event Description Document TA37044/613, Rev. 08

THIS PAGE INTENTIONALLY LEFT BLANK

EVENT DESCRIPTION DOCUMENT

FOR

LACMTA 3010 SERIES LRV
PNEUMATIC FRICTION BRAKE SYSTEM
FOR
KINKISHARYO

CDRL: 118

RESPONSIBILITY	TITLE	NAME	SIGNATURE	DATE
AUTHOR:	ELECTRONICS SYSTEMS ENGINEER	DAVID DRURY	See PLM For Approval*	4/18/19
CHECK:	ELECTRONIC SYSTEMS ENGINEERING TEAM LEAD	DAVID DRURY	See PLM For Approval*	4/18/19
RELEASE:	ELECTRONIC SYSTEMS ENGINEERING MANAGER	GREG ZAWADZKI	See PLM For Approval*	4/18/19

* Document is electronically signed in PLM

This document contains proprietary and confidential information of Knorr Brake Company, LLC. No disclosure, reproduction, or use of any part may be made without written permission of Knorr Brake Company, LLC.

Knorr-Bremse Group

IMPORTANT NOTICE

This document contains information that is proprietary to Knorr Brake Company, LLC. The document is provided under the express understanding that the information is used for engineering evaluation only and may not be copied or used for manufacture without specific written permission from Knorr Brake Company, LLC.

The document may not be provided to third parties without specific written permission from Knorr Brake Company, LLC. The document may be provided to the transit authority identified on the title page of this document under the express understanding that it is used for technical evaluation purposes only and provided that the transit authority agrees to maintain confidentiality and does not copy, distribute or provide to third parties.

This document contains proprietary and confidential information of Knorr Brake Company, LLC.
No disclosure, reproduction, or use of any part may be made without written permission of Knorr Brake Company, LLC.

Knorr-Bremse Group

DOCUMENT REVISION RECORD

REVISION NUMBER	REVISION	INITIATOR	DATE
00	INITIAL RELEASE	G. Zawadzki	10/17/2014
01	- Sections 3.2.1, 3.2.2, 3.2.3, 3.2.4– added events according to software application;	E. Levin	6/10/2015
02	- Section 3.1 – added info for events with priority 0; - Added column 'Sent to TOD' to the table events;	E. Levin	7/2/2015
03	- Updated per letter P3010-MA-KI-LTR-03132_1 - Updated fault DIA_PRC_OFFSET MMI code 0201; - Updated fault row DIA_PRC_DEVIATION MMI 0301; - Removed ERR_TRUCKTYPE MMI: TRKT and ERR_BADBRAKEMODE MMI: BBMI, not in use; - Removed duplicated fault ERR_PARKBRAKECIRCUIT_FAULT_ECU with MMI: PBCF; - Added additional faults.	E. Levin	12/15/2015
04	- Updated per letter Letter P3010-MA-KI-LTR-03446_1; - Merged cells in column MMI Code to make an error code searchable; - Changed description for BCIV, *CVIV,* MRRL, MRPL error codes; - Added board identification to every page - Added data log data for faults - Cleaning up formatting	E. Levin D. Parks	10/12/16

This document contains proprietary and confidential information of Knorr Brake Company, LLC. No disclosure, reproduction, or use of any part may be made without written permission of Knorr Brake Company, LLC.

Knorr-Bremse Group

05	-added column in events list indicating which faults will open the major fault relay	D. Drury	08/28/17
06	- Added to Possible Cause description Section 3.2.1 Service Terminal Event ERR_MAIN_RESERVOIR_PRES_LOW	K. Taylor	12/19/17
07	- Updated faults to match code version 2.02	K. Taylor	12/07/18
08	Update four digit alpha-numeric fault code for Real Time Clock error and CB12 Board Error Code	D. Drury	4/18/19

This document contains proprietary and confidential information of Knorr Brake Company, LLC. No disclosure, reproduction, or use of any part may be made without written permission of Knorr Brake Company, LLC.

Knorr-Bremse Group

CONTROLLED DISTRIBUTION

This document shall be distributed by Document Control to the following upon its release.

System Engineer: Sam George

This document contains proprietary and confidential information of Knorr Brake Company, LLC. No disclosure, reproduction, or use of any part may be made without written permission of Knorr Brake Company, LLC.

Knorr-Bremse Group

TABLE OF CONTENTS

1 GENERAL INFORMATION 7
2 REFERENCES 7
3 EVENTS LIST 7
3.1 Explanation of the Table(s) of Events 7
3.2 ESRA System Event Codes 9
3.2.1 MB04_01 (Node #1) 9
3.2.2 MB03_02 (Node #2) 20
3.2.3 CB09_22 (Node #22) 33
3.2.4 CB12_28 (Node #28) 37

This document contains proprietary and confidential information of Knorr Brake Company, LLC.
No disclosure, reproduction, or use of any part may be made without written permission of Knorr Brake Company, LLC.

Knorr-Bremse Group

1 GENERAL INFORMATION

WARNING: Printed circuit boards should not be removed while the Friction Brake ECU is under power. This can possibly damage the Friction Brake ECU!

CAUTION: If it is necessary to pull any printed circuit board (PCB) out of the Friction Brake ECU, please insure that the ECU is POWERED OFF! Verify that power is removed from the ECU by removing the power plug from the PB01 front panel connector or by turning off the appropriate circuit breaker.

The electronic circuitry is not subject to wear and does not need maintenance. The Friction Brake ECU is designed to execute a continuous self-test of each circuit board to ensure proper system operation. Any errors found during this self-test will be reported via the MMI and Service Terminal output. A list of possible errors that the LACMTA 3010 LRV Friction Brake ECU will report can be found in Section 3.2.
Equipment external to the Friction Brake ECU may require long term periodic maintenance checks. This would include but not be limited to speed sensors, pressure transducers, magnet valves, etc.

2 REFERENCES

None

3 EVENTS LIST

This list contains all events that the friction brake ECU will generate. The 4 digit code will be displayed on the MMI's alpha-numeric display and the Event Name will be displayed on the service terminal PTU.

3.1 Explanation of the Table(s) of Events

Man Machine Interface (MMI) Code: this is the 4-digit alpha-numeric code displayed on the front of the MMI that is attached to the MB04B card in the Friction Brake ECU.

Service Terminal Event Name: this is the event name that will be displayed on the ST03 service terminal PTU

TOD: This column indicates whether or not the fault is transmitted to the TOD

Events with priority 0 are not displayed on the MMI but are displayed in PTU.

This document contains proprietary and confidential information of Knorr Brake Company, LLC.
No disclosure, reproduction, or use of any part may be made without written permission of Knorr Brake Company, LLC.

Knorr-Bremse Group

Priority: This determines significance of the fault when presented on the MMI:
0: Error will not be displayed on MMI
1: Lowest priority to display
3: Highest priority to display

T-come Time: amount of time the error must be present before it is logged into current memory storage

T-go Time: amount of time the error must be gone before it is removed from the current memory storage and moved to the transient memory storage.

Possible Cause(s): a list of possible causes of event

Possible Corrective Action(s): a list of possible (not all) corrective actions

Data Log Variables: A list of the data associated with the attached fault.

This document contains proprietary and confidential information of Knorr Brake Company, LLC.
No disclosure, reproduction, or use of any part may be made without written permission of Knorr Brake Company, LLC.

Knorr-Bremse Group

3.2 ESRA System Event Codes

[1] Fault within GRP1 group fault

3.2.1 MB04_01 (Node #1)

MMI Code	Service Terminal Event Name	Major Fault	TOD	t_{come} (s)	t_{go} (s)	Display Priority	Possible Cause	Possible Corrective Action(s)	Data Logger Variables
CC-1	ERR_MB04_1_CAN_COM [1]	Y	Y	3.0	0.0	1	Communication error on ESRA system bus	• Check ESRA–System bus • Replace board • Confirm correct software loaded	• bMB04_AlphaCode • bMB04_MajorNumber • bMB04_MinorNumber
NA-1	ERR_MB04_1_NV_ACCESS [1]	Y	Y	0.0	0.0	1	Error by reading net variable	• Check ESRA–System bus • Replace board • Confirm correct software loaded	• bMB04_AlphaCode • bMB04_MajorNumber • bMB04_MinorNumber • bMB03_AlphaCode • bMB03_MajorNumber • bMB03_MinorNumber • bCB09_AlphaCode • bCB09_MajorNumber • bCB09_MinorNumber
TO-1	ERR_MB04_1_NV_TIMEOUT [1]	Y	Y	3.0	0.0	1	The MB04_1 board reports this error when it is unable to receive at least one of the expected network variables with the initial setpoints	• Check ESRA system bus • Replace the other board(s) that is required to send the NV information to this board. • This board is typically not the problem	• bMB04_AlphaCode • bMB04_MajorNumber • bMB04_MinorNumber • bMB03_AlphaCode • bMB03_MajorNumber • bMB03_MinorNumber • bCB09_AlphaCode • bCB09_MajorNumber • bCB09_MinorNumber
IO-1	ERR_MB04_1_DRV_IO_ACCESS [1]	Y	Y	0.0	0.0	1	Error reading inputs or writing outputs of this board	• Confirm correct software loaded • Replace board.	• bMB04_AlphaCode • bMB04_MajorNumber • bMB04_MinorNumber
AF-1	ERR_MB04_1_ACTIVATE_FCT [1]	Y	Y	0.0	0.0	1	Function activation error	• Confirm correct software loaded • Replace board.	• bMB04_AlphaCode • bMB04_MajorNumber • bMB04_MinorNumber

This document contains proprietary and confidential information of Knorr Brake Company, LLC.
No disclosure, reproduction, or use of any part may be made without written permission of Knorr Brake Company, LLC.

Knorr-Bremse Group

MB04_01 (Node #1)

[1] Fault within GRP1 group fault

MMI Code	Service Terminal Event Name	Major Fault	TOD	t_{come} (s)	t_{go} (s)	Display Priority	Possible Cause	Possible Corrective Action(s)	Data Logger Variables
CF-1	ERR_MB04_1_CONFIGURATION [1]	Y	Y	0.0	0.0	1	Software configuration error	• Confirm correct software loaded • Replace board.	• bMB04_AlphaCode • bMB04_MajorNumber • bMB04_MinorNumber
ER-1	ERR_MB04_1_EEP_FAILURE [1]	Y	Y	0.2	0.0	1	EEPROM defective	• Change MB04 board • Confirm correct software loaded	• bMB04_AlphaCode • bMB04_MajorNumber • bMB04_MinorNumber
X1-1	ERR_MB04_1_BOARD_CODING [1]	Y	Y	1.0	0.0	1	Coding via front plug does not match internally stored node number	• Confirm the front plug is coded correctly via jumpers on pins as identified in TA37044/22.	• N/A
GRP1	ERR_MB04_1_GENERAL_ERROR	Y	Y	3.0	1.0	3	Internal Card Errors occurred on the MB04. MB04_1_CAN_COM; MB04_1_NV_ACCESS; MB04_1_NV_TIMEOUT; MB04_1_DRV_IO_ACCESS; MB04_ 1_ACTIVATE_FCT; MB04_1_CONFIGURATION; MB04_1_EEP_FAILURE; MB04_1_BOARD_CODING	• Refer to individual event entry	• N/A
13-1	ERR_MB04_1_SHORT_PWROUT11	Y	Y	3.0	0.0	1	Short circuit in the power output stage POP 1	• Evaluate faulty or incorrect wiring/valve configuration • Replace MB04_1 board	• N/A
23-1	ERR_MB04_1_SHORT_PWROUT12	Y	Y	3.0	0.0	1	Short circuit in the power output stage POP 2	• Evaluate faulty or incorrect wiring/valve configuration • Replace MB04_1 board	• N/A
33-1	ERR_MB04_1_SHORT_PWROUT21	N	N	3.0	0.0	1	Short circuit in the power output stage POP 3	• Evaluate faulty or incorrect wiring/valve configuration • Replace MB04_1 board	• N/A
43-1	ERR_MB04_1_SHORT_PWROUT22	N	N	3.0	0.0	1	Short circuit in the power output stage POP 4	• Evaluate faulty or incorrect wiring/valve configuration • Replace MB04_1 board	• N/A

This document contains proprietary and confidential information of Knorr Brake Company, LLC.
No disclosure, reproduction, or use of any part may be made without written permission of Knorr Brake Company, LLC.

Knorr-Bremse Group

53-1	ERR_MB04_1_SHORT_PWROUT31	N	N	3.0	0.0	1	Short circuit in the power output stage POP 5	• Evaluate faulty or incorrect wiring/valve configuration • Replace MB04_1 board	• N/A

This document contains proprietary and confidential information of Knorr Brake Company, LLC.
No disclosure, reproduction, or use of any part may be made without written permission of Knorr Brake Company, LLC.

Knorr-Bremse Group

MB04_01 (Node #1)

MMI Code	Service Terminal Event Name	Major Fault	TOD	t_{come} (s)	t_{go} (s)	Display Priority	Possible Cause	Possible Corrective Action(s)	Data Logger Variables
63-1	ERR_MB04_1_SHORT_PWROUT32	N	N	3.0	0.0	1	Short circuit in the power output stage POP 6	• Evaluate faulty or incorrect wiring/valve configuration • Replace MB04_1 board	• N/A
73-1	ERR_MB04_1_SHORT_PWROUT41	N	N	3.0	0.0	1	Short circuit in the power output stage POP 7	• Evaluate faulty or incorrect wiring/valve configuration • Replace MB04_1 board	• N/A
83-1	ERR_MB04_1_SHORT_PWROUT42	N	N	3.0	0.0	1	Short circuit in the power output stage POP 8	• Evaluate faulty or incorrect wiring/valve configuration • Replace MB04_1 board	• N/A
14-1	ERR_MB04_1_OPEN_PWROUT11	Y	Y	3.0	0.0	1	Open circuit in the power output stage POP 1	• Evaluate faulty or incorrect wiring/valve configuration • Replace MB04_1 board	• N/A
24-1	ERR_MB04_1_OPEN_PWROUT12	Y	Y	3.0	0.0	1	Open circuit in the power output stage POP 2	• Evaluate faulty or incorrect wiring/valve configuration • Replace MB04_1 board	• N/A
34-1	ERR_MB04_1_OPEN_PWROUT21	N	N	3.0	0.0	1	Open circuit in the power output stage POP 3	• Evaluate faulty or incorrect wiring/valve configuration • Replace MB04_1 board	• N/A
44-1	ERR_MB04_1_OPEN_PWROUT22	N	N	3.0	0.0	1	Open circuit in the power output stage POP 4	• Evaluate faulty or incorrect wiring/valve configuration • Replace MB04_1 board	• N/A
54-1	ERR_MB04_1_OPEN_PWROUT31	N	N	3.0	0.0	1	Open circuit in the power output stage POP 5	• Evaluate faulty or incorrect wiring/valve configuration • Replace MB04_1 board	• N/A
64-1	ERR_MB04_1_OPEN_PWROUT32	N	N	3.0	0.0	1	Open circuit in the power output stage POP 6	• Evaluate faulty or incorrect wiring/valve configuration • Replace MB04_1 board	• N/A
74-1	ERR_MB04_1_OPEN_PWROUT41	N	N	3.0	0.0	1	Open circuit in the power output stage POP 7	• Evaluate faulty or incorrect wiring/valve configuration • Replace MB04_1 board	• N/A

This document contains proprietary and confidential information of Knorr Brake Company, LLC.
No disclosure, reproduction, or use of any part may be made without written permission of Knorr Brake Company, LLC.

Knorr-Bremse Group

MB04_01 (Node #1)

[4] Fault within GRP4 group fault

MMI Code	Service Terminal Event Name	Major Fault	TOD	t_{come} (s)	t_{go} (s)	Display Priority	Possible Cause	Possible Corrective Action(s)	Data Logger Variables
84-1	ERR_MB04_1_OPEN_PWROUT42	N	N	3.0	0.0	1	Open circuit in the power output stage POP 8	• Evaluate faulty or incorrect wiring/valve configuration • Replace MB04_1 board	• N/A
C1-1	ERR_MB04_1_CUTOFF_PWROUT1x	Y	Y	3.0	0.0	1	Safety time expired for one of the four power outputs	• Remove short from one of the four power outputs POP 1 through POP 4 • Replace MB04_1 board	• N/A
C2-1	ERR_MB04_1_CUTOFF_PWROUT2x	N	N	3.0	0.0	1	Safety time expired for one of the four power outputs	• Remove short from one of the four power outputs POP 5 through POP 8 • Replace MB04_1 board	• N/A
EF-1	ERR_MB04_1_ECU_FAILURE	Y	Y	0.0	0.0	1	Failsafe path or monitoring processor is down	• Confirm correct software is loaded • Replace MB04_1 board	• bMB04_AlphaCode • bMB04_MajorNumber • bMB04_MinorNumber
CC-4	ERR_EB02_4_CAN_COM [4]	Y	Y	1.0	0.0	1	Communication error on ESRA system bus	• Check ESRA–System bus • Change board • Confirm correct software loaded	• bMB04_AlphaCode • bMB04_MajorNumber • bMB04_MinorNumber
NA-4	ERR_EB02_4_NV_ACCESS [4]	Y	Y	0.0	0.0	1	Error by reading net variable	• Confirm correct software loaded • Replace board.	• bMB04_AlphaCode • bMB04_MajorNumber • bMB04_MinorNumber • bMB03_AlphaCode • bMB03_MajorNumber • bMB03_MinorNumber • bCB09_AlphaCode • bCB09_MajorNumber • bCB09_MinorNumber

This document contains proprietary and confidential information of Knorr Brake Company, LLC.
No disclosure, reproduction, or use of any part may be made without written permission of Knorr Brake Company, LLC.

Knorr-Bremse Group

MB04_01 (Node #1)

[4] Fault within GRP4 group fault

MMI Code	Service Terminal Event Name	Major Fault	TOD	t_{come} (s)	t_{go} (s)	Display Priority	Possible Cause	Possible Corrective Action(s)	Data Logger Variables
TO-4	ERR_EB02_4_NV_TIMEOUT [4]	Y	Y	1.0	0.0	1	The EB02_4 board reports this error when it is unable to receive at least one of the expected network variables with the initial setpoints	• Check ESRA system bus • Replace the other board(s) that is required to send the NV information to this board. • This board is typically not the problem	• bMB04_AlphaCode • bMB04_MajorNumber • bMB04_MinorNumber • bMB03_AlphaCode • bMB03_MajorNumber • bMB03_MinorNumber • bCB09_AlphaCode • bCB09_MajorNumber • bCB09_MinorNumber
IO-4	ERR_EB02_4_DRV_IO_ACCESS [4]	Y	Y	0.0	0.0	1	Error reading inputs or writing outputs of this board	• Confirm correct software loaded • Replace board.	• bMB04_AlphaCode • bMB04_MajorNumber • bMB04_MinorNumber
AF-4	ERR_EB02_4_ACTIVATE_FCT [4]	Y	Y	0.0	0.0	1	Function activation error	• Confirm correct software loaded • Replace board.	• bMB04_AlphaCode • bMB04_MajorNumber • bMB04_MinorNumber
CF-4	ERR_EB02_4_CONFIGURATION [4]	Y	Y	0.0	0.0	1	Software configuration error	• Confirm correct software loaded • Replace board.	• bMB04_AlphaCode • bMB04_MajorNumber • bMB04_MinorNumber
ER-4	ERR_EB02_4_EEP_FAILURE [4]	Y	Y	0.2	0.0	1	EEPROM defective	• Confirm correct software loaded • Replace MB04B board.	• bMB04_AlphaCode • bMB04_MajorNumber • bMB04_MinorNumber
X1-4	ERR_EB02_4_BOARD_CODING [4]	Y	Y	1.0	0.0	1	Coding via front plug does not match internally stored node number	• Confirm the front plug is coded correctly via jumpers on pins as identified in TA37044/22.	• N/A

This document contains proprietary and confidential information of Knorr Brake Company, LLC.
No disclosure, reproduction, or use of any part may be made without written permission of Knorr Brake Company, LLC.

Knorr-Bremse Group

MB04_01 (Node #1)

MMI Code	Service Terminal Event Name	Major Fault	TOD	t_{come} (s)	t_{go} (s)	Display Priority	Possible Cause	Possible Corrective Action(s)	Data Logger Variables
GRP4	ERR_EB02_4_GENERAL_ERROR	Y	Y	3.0	1.0	3	Internal Card Errors occurred on the EB02. EB02_4_CAN_COM; EB02_4_NV_ACCESS; EB02_4_NV_TIMEOUT; EB02_4_ DRV _IO_ACCESS; EB02_4_ACTIVATE_FCT; EB02_4_CONFIGURATION; EB02_4_EEP_FAILURE; EB02_4_BOARD_CODING	• Refer to individual event entry	• N/A
SR04	ERR_SLAVE_REP_TIMEOUT_EB02_4	Y	Y	3.0	0.0	1	Incorrect software installed Defective board Defective backplane	• Confirm correct software loaded • Replace board. • Replace backplane	• bMB04_AlphaCode • bMB04_MajorNumber • bMB04_MinorNumber
SC04	ERR_SLC_CFG_EB02_4	Y	Y	3.0	0.0	1	Incorrect software installed Defective board Defective backplane	• Confirm correct software loaded • Replace board. • Replace backplane	• bMB04_AlphaCode • bMB04_MajorNumber • bMB04_MinorNumber
0225	ERR_KN_2_NV_25_TIMEOUT	Y	Y	1.0	1.0	1	Incorrect software installed Defective board Defective backplane	• Check ESRA system bus • Replace the other board(s) that is required to send the NV information to this board. • This board is typically not the problem	• bMB04_AlphaCode • bMB04_MajorNumber • bMB04_MinorNumber • bMB03_AlphaCode • bMB03_MajorNumber • bMB03_MinorNumber
0304	ERR_KN_3_NV_4_TIMEOUT	Y	Y	1.0	1.0	1	Incorrect software installed Defective board Defective backplane	• Check ESRA system bus • Replace the other board(s) that is required to send the NV information to this board. • This board is typically not the problem	• bMB04_AlphaCode • bMB04_MajorNumber • bMB04_MinorNumber • bMB03_AlphaCode • bMB03_MajorNumber • bMB03_MinorNumber

This document contains proprietary and confidential information of Knorr Brake Company, LLC.
No disclosure, reproduction, or use of any part may be made without written permission of Knorr Brake Company, LLC.

Knorr-Bremse Group

MB04_01 (Node #1)

[7] Fault within GRP7 group fault

MMI Code	Service Terminal Event Name	Major Fault	TOD	t_{come} (s)	t_{go} (s)	Display Priority	Possible Cause	Possible Corrective Action(s)	Data Logger Variables
0403	ERR_KN_4_NV_3_TIMEOUT	Y	Y	1.0	1.0	1	Incorrect software installed Defective board Defective backplane	• Check ESRA system bus • Replace the other board(s) that is required to send the NV information to this board. • This board is typically not the problem	• bMB04_AlphaCode • bMB04_MajorNumber • bMB04_MinorNumber
2211	ERR_KN_22_NV_11_TIMEOUT	Y	Y	1.0	1.0	1	Incorrect software installed Defective board Defective backplane	• Check ESRA system bus • Replace the other board(s) that is required to send the NV information to this board. • This board is typically not the problem	• bMB04_AlphaCode • bMB04_MajorNumber • bMB04_MinorNumber • bCB09_AlphaCode • bCB09_MajorNumber • bCB09_MinorNumber
2222	ERR_KN_22_NV_22_TIMEOUT	Y	Y	1.0	1.0	1	Incorrect software installed Defective board Defective backplane	• Check ESRA system bus • Replace the other board(s) that is required to send the NV information to this board. • This board is typically not the problem	• bMB04_AlphaCode • bMB04_MajorNumber • bMB04_MinorNumber • bCB09_AlphaCode • bCB09_MajorNumber • bCB09_MinorNumber
DCLC	DIA_PRC_CONFIG [7]	Y	Y	0.4	3.0	3	The pressure regulator function detected a configuration error	• Confirm correct software loaded • Replace board.	• sDiaConfig_GLB • sUpdateDiaOffset_GLB • sErr_NoConfig_MSG
DCLO	DIA_PRC_OFFSET [7]	Y	Y	0.4	3.0	3	Defective pressure transducer and/or wiring issue	• Check for correct S/W • Check the wiring • Check the pneumatics • Replace board.	• sDiaOffset_GLB • sUpdateDiaOffset_GLB • sCurrentCv_Bar • wTargetCv_Bar • wBrake_Cyl_trans_Curr

This document contains proprietary and confidential information of Knorr Brake Company, LLC.
No disclosure, reproduction, or use of any part may be made without written permission of Knorr Brake Company, LLC.

Knorr-Bremse Group

MB04_01 (Node #1)

[7] Fault within GRP7 group fault

MMI Code	Service Terminal Event Name	Major Fault	TOD	t_{come} (s)	t_{go} (s)	Display Priority	Possible Cause	Possible Corrective Action(s)	Data Logger Variables
DCLD	DIA_PRC_DEVIATION [7]	Y	Y	1.0	3.0	3	Defective pressure transducer and/or wiring issue Incorrect wiring to AMV/RMV brake control valves	• Check for correct S/W • Check the wiring • Check the pneumatics • Replace board.	• sDiaDeviation_GLB • sUpdateDiaDeviation_GLB • sCurrentCv_Bar • wTargetCv_Bar • wBrake_Cyl_trans_Curr
MRPL	ERR_MAIN_RESERVOIR_PRES_LOW **(only applicable for Center Truck)**	Y	Y	3.0	1.0	3	Main Reservoir Pressure is below 90psi and the car is moving.	• Confirm correct operation of ASU	• bMainReservoir_PSI • wMR_Press_trans_Curr • boStandStill
MRRL	ERR_MAIN_RESERVOIR_RATE_LOW **(only applicable for Center Truck)**	N	Y	3.0	1.0	1	The main reservoir pressure build rate is less than the required rate (CT only)	• Confirm correct operation of ASU	• boH_ASU_ContactorFeedback • bMRP_Timer • wMainReservoir_PSI_x10_New • wMainReservoir_PSI_x10 • wMainReservoir_PSI_x10_Saved
TLMM	ERR_TRAINLINE_MISMATCH	Y	Y	3.0	1.0	3	The ECU has detected an invalid state of the Trainlines	• Confirm correct operation of Master controller and confirm there are no wiring problems	• bH_Motor_TL • bH_Coast_Motor_TL • boStandStill
BCIV	ERR_BRKCYLNTRAN_INVALID	N	Y	5.0	1.0	3	Brake cylinder signal is less than 3.8 mA or greater than 21 mA.	• Verify transducer & wiring • Replace MB04 board	• wBrake_Cyl_trans_Curr

This document contains proprietary and confidential information of Knorr Brake Company, LLC.
No disclosure, reproduction, or use of any part may be made without written permission of Knorr Brake Company, LLC.

Knorr-Bremse Group

MB04_01 (Node #1)

MMI Code	Service Terminal Event Name	Major Fault	TOD	t_{come} (s)	t_{go} (s)	Display Priority	Possible Cause	Possible Corrective Action(s)	Data Logger Variables
PBED	ERR_NO_PBED_SIGNAL	N	Y	1.0	3.0	1	Occurs when PWM <1%, not in limp home mode, and not in stand still mode	• Check PBED source • Check wiring	• N/A
CVIV	ERR_CONTROLVOLTRAN_INVALID	Y	Y	5.0	1.0	3	Control volume signal is less than 3.8 mA or greater than 21 mA.	• Verify transducer & wiring • Replace MB04 board	• wControl_Pressure_trans_Curr
PBCF	ERR_PARKBRAKECIRCUIT_FAULT **(only applicable for Power Truck)**	Y	Y	3.0	1.0	3	The park Brake switches have reported an imposs ble situation, both applied and released.	• Verify switches & wiring • Replace board	• boH_PB_Release_PS • boH_PB_Apply_PS
CVDV	ERR_CONTROLDEVIATION_FAULT	Y	Y	3.0	1.0	3	The ECU's target pressure and the resulting pressure (brake cylinder) are outside of the acceptable range + 5 to -5 PSI	• Verify transducer & wiring • Replace MB04 board	• bTrainBrakeState • bCurrentCv_PSI • wTargetCv_PSI • wControl_Pressure_trans_Curr
COMV	ERR_TRAINMOVEDCUTOUT	N	Y	3.0	1.0	3	The friction brakes on this truck were disabled when the train was moved.	No corrective action; status information only	• boH_Elec_Cutout • boH_MechCutout • boStandStill
LDOR	ERR_LOAD_SIGNAL_OOR	N	Y	5.0	1.0	3	The ECUs load signal is out of range 36.3 to 79.8 PSI (5 to14 ma)	• Verify transducer & wiring • Replace MB04 board	• wLoadWeight_trans_Curr • boDoorsOpen • boStandStill
LDIV	ERR_LOAD_SIGNAL_INVALID	N	Y	5.0	1.0	3	The ECUs load signal is out of range 25.4 to 148.6 PSI (3.5 to 20.5) ma.	• Verify transducer & wiring • Replace MB04 board	• wLoadWeight_trans_Curr • boDoorsOpen • boStandStill

This document contains proprietary and confidential information of Knorr Brake Company, LLC.
No disclosure, reproduction, or use of any part may be made without written permission of Knorr Brake Company, LLC.

Knorr-Bremse Group

MB04_01 (Node #1)

MMI Code	Service Terminal Event Name	Major Fault	TOD	t_{come} (s)	t_{go} (s)	Display Priority	Possible Cause	Possible Corrective Action(s)	Data Logger Variables
ECOA	ERR_ELEC_CUTOUT_ACTIVE	N	N	3.0	1.0	3	ECU has detected that the friction brake electrical cutout has been activated	No corrective action; status information only	• boH_Elec_Cutout
MCOA	ERR_MECH_CUTOUT_ACTIVE	N	N	3.0	1.0	3	ECU has detected that the friction brake mechanical cutout has been activated	No corrective action; status information only	• boH_Mech_Cutout

This document contains proprietary and confidential information of Knorr Brake Company, LLC.
No disclosure, reproduction, or use of any part may be made without written permission of Knorr Brake Company, LLC.

Knorr-Bremse Group

3.2.2 MB03_02 (Node #2)

[2] Fault within GRP2 group fault

MMI Code	Service Terminal Event Name	Major Fault	TOD	t_{come} (s)	t_{go} (s)	Display Priority	Possible Cause	Possible Corrective Action(s)	Data Logger Variables
CC-2	ERR_MB03_2_CAN_COM [2]	Y	Y	3.0	0.0	1	Communication error on ESRA system bus	• Check ESRA–System bus • Replace board • Confirm correct software loaded	• bMB03_AlphaCode • bMB03_MajorNumber • bMB03_MinorNumber
NA-2	ERR_MB03_2_NV_ACCESS [2]	Y	Y	3.0	0.0	1	Error by reading net variable	• Check ESRA–System bus • Replace board • Confirm correct software loaded	• bMB04_AlphaCode • bMB04_MajorNumber • bMB04_MinorNumber • bMB03_AlphaCode • bMB03_MajorNumber • bMB03_MinorNumber • bCB09_AlphaCode • bCB09_MajorNumber • bCB09_MinorNumber
TO-2	ERR_MB03_2_NV_TIMEOUT [2]	Y	Y	3.0	0.0	1	The MB03_2 board reports this error when it is unable to receive at least one of the expected network variables with the initial setpoints	• Check ESRA system bus • Replace the other board(s) that is required to send the NV information to this board. • This board is typically not the problem	• bMB04_AlphaCode • bMB04_MajorNumber • bMB04_MinorNumber • bMB03_AlphaCode • bMB03_MajorNumber • bMB03_MinorNumber • bCB09_AlphaCode • bCB09_MajorNumber • bCB09_MinorNumber
IO-2	ERR_MB03_2_DRV_IO_ACCESS [2]	Y	Y	3.0	0.0	1	Error reading inputs or writing outputs of this board	• Confirm correct software loaded • Replace board.	• bMB03_AlphaCode • bMB03_MajorNumber • bMB03_MinorNumber
AF-2	ERR_MB03_2_ACTIVATE_FCT [2]	Y	Y	3.0	0.0	1	Function activation error	• Confirm correct software loaded • Replace board.	• bMB03_AlphaCode • bMB03_MajorNumber • bMB03_MinorNumber

This document contains proprietary and confidential information of Knorr Brake Company, LLC.
No disclosure, reproduction, or use of any part may be made without written permission of Knorr Brake Company, LLC.

Knorr-Bremse Group

MB03_02 (Node #2)

[2] Fault within GRP2 group fault

MMI Code	Service Terminal Event Name	Major Fault	TOD	t_{come} (s)	t_{go} (s)	Display Priority	Possible Cause	Possible Corrective Action(s)	Data Logger Variables
CF-2	ERR_MB03_2_CONFIGURATION [2]	Y	Y	3.0	0.0	1	Software configuration error	• Confirm correct software loaded • Replace board.	• bMB03_AlphaCode • bMB03_MajorNumber • bMB03_MinorNumber
ER-2	ERR_MB03_2_EEP_FAILURE [2]	Y	Y	0.2	0.0	1	EEPROM defective	• Change MB03 board • Confirm correct software loaded	• bMB03_AlphaCode • bMB03_MajorNumber • bMB03_MinorNumber
X1-2	ERR_MB03_2_BOARD_CODING [2]	Y	Y	1.0	0.0	1	Coding via front plug does not match internally stored node number	• Confirm the front plug is coded correctly via jumpers on pins as identified in TA37044/22.	• N/A
GRP2	ERR_MB03_2_GENERAL_ERROR	Y	Y	1.0	3.0	3	Internal Card Errors occurred on the MB03. MB03_2_CAN_COM; MB03_2_NV_ACCESS; MB03_2_NV_TIMEOUT; MB03_2_DRV_IO_ACCESS; MB03_ 2_ACTIVATE_FCT; MB03_2_CONFIGURATION; MB03_2_EEP_FAILURE; MB03_2_BOARD_CODING	• Refer to individual event entry	• N/A
13-2	ERR_MB03_2_SHORT_PWROUT11	N	Y	3.0	0.0	1	Short circuit in the power output stage POP 1	• Evaluate faulty or incorrect wiring/valve configuration • Replace MB03_2 board	• N/A
23-2	ERR_MB03_2_SHORT_PWROUT12	N	Y	3.0	0.0	1	Short circuit in the power output stage POP 2	• Evaluate faulty or incorrect wiring/valve configuration • Replace MB03_2 board	• N/A
33-2	ERR_MB03_2_SHORT_PWROUT21	N	N	3.0	0.0	1	Short circuit in the power output stage POP 3	• Evaluate faulty or incorrect wiring/valve configuration • Replace MB03_2 board	• N/A
43-2	ERR_MB03_2_SHORT_PWROUT22	N	N	3.0	0.0	1	Short circuit in the power output stage POP 4	• Evaluate faulty or incorrect wiring/valve configuration • Replace MB03_2 board	• N/A

This document contains proprietary and confidential information of Knorr Brake Company, LLC.
No disclosure, reproduction, or use of any part may be made without written permission of Knorr Brake Company, LLC.

Knorr-Bremse Group

53-2	ERR_MB03_2_SHORT_PWROUT31	N	N	3.0	0.0	1	Short circuit in the power output stage POP 5	• Evaluate faulty or incorrect wiring/valve configuration • Replace MB03_2 board	• N/A
63-2	ERR_MB03_2_SHORT_PWROUT32	N	N	3.0	0.0	1	Short circuit in the power output stage POP 6	• Evaluate faulty or incorrect wiring/valve configuration • Replace MB03_2 board	• N/A

This document contains proprietary and confidential information of Knorr Brake Company, LLC.
No disclosure, reproduction, or use of any part may be made without written permission of Knorr Brake Company, LLC.

Knorr-Bremse Group

MB03_02 (Node #2)

MMI Code	Service Terminal Event Name	Major Fault	TOD	t_{come} (s)	t_{go} (s)	Display Priority	Possible Cause	Possible Corrective Action(s)	Data Logger Variables
73-2	ERR_MB03_2_SHORT_PWROUT41	N	N	3.0	0.0	1	Short circuit in the power output stage POP 7	• Evaluate faulty or incorrect wiring/valve configuration • Replace MB03_2 board	• N/A
83-2	ERR_MB03_2_SHORT_PWROUT42	N	N	3.0	0.0	1	Short circuit in the power output stage POP 8	• Evaluate faulty or incorrect wiring/valve configuration • Replace MB03_2 board	• N/A
14-2	ERR_MB03_2_OPEN_PWROUT11	N	Y	3.0	0.0	1	Open circuit in the power output stage POP 1	• Evaluate faulty or incorrect wiring/valve configuration • Replace MB03_2 board	• N/A
24-2	ERR_MB03_2_OPEN_PWROUT12	N	Y	3.0	0.0	1	Open circuit in the power output stage POP 2	• Evaluate faulty or incorrect wiring/valve configuration • Replace MB03_2 board	• N/A
34-2	ERR_MB03_2_OPEN_PWROUT21	N	N	3.0	0.0	1	Open circuit in the power output stage POP 3	• Evaluate faulty or incorrect wiring/valve configuration • Replace MB03_2 board	• N/A
44-2	ERR_MB03_2_OPEN_PWROUT22	N	N	3.0	0.0	1	Open circuit in the power output stage POP 4	• Evaluate faulty or incorrect wiring/valve configuration • Replace MB03_2 board	• N/A
54-2	ERR_MB03_2_OPEN_PWROUT31	N	N	3.0	0.0	1	Open circuit in the power output stage POP 5	• Evaluate faulty or incorrect wiring/valve configuration • Replace MB03_2 board	• N/A
64-2	ERR_MB03_2_OPEN_PWROUT32	N	N	3.0	0.0	1	Open circuit in the power output stage POP 6	• Evaluate faulty or incorrect wiring/valve configuration • Replace MB03_2 board	• N/A
74-2	ERR_MB03_2_OPEN_PWROUT41	N	N	3.0	0.0	1	Open circuit in the power output stage POP 7	• Evaluate faulty or incorrect wiring/valve configuration • Replace MB03_2 board	• N/A
84-2	ERR_MB03_2_OPEN_PWROUT42	N	N	3.0	0.0	1	Open circuit in the power output stage POP 8	• Evaluate faulty or incorrect wiring/valve configuration • Replace MB03_2 board	• N/A

This document contains proprietary and confidential information of Knorr Brake Company, LLC.
No disclosure, reproduction, or use of any part may be made without written permission of Knorr Brake Company, LLC.

Knorr-Bremse Group

MB03_02 (Node #2)

[3] Fault within GRP3 group fault

MMI Code	Service Terminal Event Name	Major Fault	TOD	t_{come} (s)	t_{go} (s)	Display Priority	Possible Cause	Possible Corrective Action(s)	Data Logger Variables
C1-2	ERR_MB03_2_CUTOFF_PWROUT1x	N	Y	3.0	0.0	1	Safety time expired for one of the four power outputs	• Remove short from one of the four power outputs POP 1 through POP 4 • Replace MB03_2 board	• N/A
C2-2	ERR_MB03_2_CUTOFF_PWROUT2x	N	N	3.0	0.0	1	Safety time expired for one of the four power outputs	• Remove short from one of the four power outputs POP 5 through POP 8 • Replace MB03_2 board	• N/A
EF-2	ERR_MB03_2_ECU_FAILURE	Y	Y	3.0	0.0	1	Failsafe path or monitoring processor is down	• Confirm correct software is loaded • Replace MB03_2 board	• bMB03_AlphaCode • bMB03_MajorNumber • bMB03_MinorNumber
CC-3	ERR_EB01_3_CAN_COM [3]	Y	Y	3.0	0.0	1	Communication error on ESRA system bus	• Check ESRA–System bus • Change board • Confirm correct software loaded	• bMB03_AlphaCode • bMB03_MajorNumber • bMB03_MinorNumber
NA-3	ERR_EB01_3_NV_ACCESS [3]	Y	Y	3.0	0.0	1	Error by reading net variable	• Confirm correct software loaded • Replace board.	• bMB03_AlphaCode • bMB03_MajorNumber • bMB03_MinorNumber
TO-3	ERR_EB01_3_NV_TIMEOUT [3]	Y	Y	3.0	0.0	1	The MB03_1 board reports this error when it is unable to receive at least one of the expected network variables with the initial setpoints	• Check ESRA system bus • Replace the other board(s) that is required to send the NV information to this board. • This board is typically not the problem	• bMB04_AlphaCode • bMB04_MajorNumber • bMB04_MinorNumber • bMB03_AlphaCode • bMB03_MajorNumber • bMB03_MinorNumber • bCB09_AlphaCode • bCB09_MajorNumber • bCB09_MinorNumber

This document contains proprietary and confidential information of Knorr Brake Company, LLC.
No disclosure, reproduction, or use of any part may be made without written permission of Knorr Brake Company, LLC.

Knorr-Bremse Group

MB03_02 (Node #2)

[3] Fault within GRP3 group fault

MMI Code	Service Terminal Event Name	Major Fault	TOD	t_{come} (s)	t_{go} (s)	Display Priority	Possible Cause	Possible Corrective Action(s)	Data Logger Variables
IO-3	ERR_EB01_3_DRV_IO_ACCESS [3]	Y	Y	3.0	0.0	1	Error reading inputs or writing outputs of this board	• Confirm correct software loaded • Replace board.	• bMB03_AlphaCode • bMB03_MajorNumber • bMB03_MinorNumber
AF-3	ERR_EB01_3_ACTIVATE_FCT [3]	Y	Y	3.0	0.0	1	Function activation error	• Confirm correct software loaded • Replace board.	• bMB03_AlphaCode • bMB03_MajorNumber • bMB03_MinorNumber
CF-3	ERR_EB01_3_CONFIGURATION [3]	Y	Y	3.0	0.0	1	Software configuration error	• Confirm correct software loaded • Replace board.	• bMB03_AlphaCode • bMB03_MajorNumber • bMB03_MinorNumber
ER-3	ERR_EB01_3_EEP_FAILURE [3]	Y	Y	0.2	0.0	1	EEPROM defective	• Change MB03 board • Confirm correct software loaded	• bMB03_AlphaCode • bMB03_MajorNumber • bMB03_MinorNumber
X1-3	ERR_EB01_3_BOARD_CODING [3]	Y	Y	1.0	0.0	1	Coding via front plug does not match internally stored node number	• Confirm the front plug is coded correctly via jumpers on pins as identified in TA37044/22.	• N/A
GRP3	ERR_EB01_3_GENERAL_ERROR	Y	Y	3.0	1.0	3	Internal Card Errors occurred on the EB01. EB01_3_CAN_COM; EB01_3_NV_ACCESS; EB01_3_NV_TIMEOUT; EB01_3_DRV_IO_ACCESS; EB01_3_ACTIVATE_FCT; EB01_3_CONFIGURATION; EB01_3_EEP_FAILURE; EB01_3_BOARD_CODING	• Refer to individual event entry	• N/A
R0-3	ERR_EB01_3_RELAY0	N	Y	3.0	0.0	1	ECU extension board relay 1 defective	• Replace board	• N/A
R1-3	ERR_EB01_3_RELAY1	N	N	3.0	0.0	1	ECU extension board relay 2 defective	• Replace board	• N/A
R2-3	ERR_EB01_3_RELAY2	N	N	3.0	0.0	1	ECU extension board relay 3 defective	• Replace board	• N/A

This document contains proprietary and confidential information of Knorr Brake Company, LLC.
No disclosure, reproduction, or use of any part may be made without written permission of Knorr Brake Company, LLC.

Knorr-Bremse Group

MB03_02 (Node #2)

[3] Fault within GRP3 group fault

MMI Code	Service Terminal Event Name	Major Fault	TOD	t_{come} (s)	t_{go} (s)	Display Priority	Possible Cause	Possible Corrective Action(s)	Data Logger Variables
R3-3	ERR_EB01_3_RELAY3	N	N	3.0	0.0	1	ECU extension board relay 4 defective	• Replace board	• N/A
R4-3	ERR_EB01_3_RELAY4	N	N	3.0	0.0	1	ECU extension board relay 5 defective	• Replace board	• N/A
R5-3	ERR_EB01_3_RELAY5	N	N	3.0	0.0	1	ECU extension board relay 6 defective	• Replace board	• N/A
R6-3	ERR_EB01_3_RELAY6	N	N	3.0	0.0	1	ECU extension board relay 7 defective	• Replace board	• N/A
R7-3	ERR_EB01_3_RELAY7	N	N	3.0	0.0	1	ECU extension board relay 8 defective	• Replace board	• N/A
WD-3	ERR_EB01_3_IO_WATCHDOG	Y	Y	1.0	0.0	1	I/O Watchdog timer error	• Confirm correct software loaded • Replace board.	• bMB03_AlphaCode • bMB03_MajorNumber • bMB03_MinorNumber
SR03	ERR_SLAVE_REP_TIMEOUT_EB01_3	Y	Y	3.0	0.0	1	Internal CAN bus Communication timeout	• Confirm correct software loaded • Replace board.	• bMB03_AlphaCode • bMB03_MajorNumber • bMB03_MinorNumber
SC03	ERR_SLC_CFG_EB01_3	Y	Y	3.0	0.0	1	Slave configuration error	• Confirm correct software loaded • Replace board.	• bMB03_AlphaCode • bMB03_MajorNumber • bMB03_MinorNumber
0103	ERR_KN_1_NV_3_TIMEOUT	Y	Y	3.0	0.0	1	Internal CAN bus Communication timeout	• Check ESRA system bus • Replace the other board(s) that is required to send the NV information to this board. • This board is typically not the problem	• bMB03_AlphaCode • bMB03_MajorNumber • bMB03_MinorNumber • bMB04_AlphaCode • bMB04_MajorNumber • bMB04_MinorNumber

This document contains proprietary and confidential information of Knorr Brake Company, LLC.
No disclosure, reproduction, or use of any part may be made without written permission of Knorr Brake Company, LLC.

Knorr-Bremse Group

MB03_02 (Node #2)

MMI Code	Service Terminal Event Name	Major Fault	TOD	t_{come} (s)	t_{go} (s)	Display Priority	Possible Cause	Possible Corrective Action(s)	Data Logger Variables
0304	ERR_KN_3_NV_4_TIMEOUT	Y	Y	3.0	0.0	1	Internal CAN bus Communication timeout	• Check ESRA system bus • Replace the other board(s) that is required to send the NV information to this board. • This board is typically not the problem	• bMB03_AlphaCode • bMB03_MajorNumber • bMB03_MinorNumber
0403	ERR_KN_4_NV_3_TIMEOUT	Y	Y	3.0	0.0	1	Internal CAN bus Communication timeout	• Check ESRA system bus • Replace the other board(s) that is required to send the NV information to this board. • This board is typically not the problem	• bMB03_AlphaCode • bMB03_MajorNumber • bMB03_MinorNumber • bMB04_AlphaCode • bMB04_MajorNumber • bMB04_MinorNumber
2224	ERR_KN_22_NV_24_TIMEOUT	Y	Y	3.0	0.0	1	Internal CAN bus Communication timeout	• Check ESRA system bus • Replace the other board(s) that is required to send the NV information to this board. • This board is typically not the problem	• bMB03_AlphaCode • bMB03_MajorNumber • bMB03_MinorNumber • bCB09_AlphaCode • bCB09_MajorNumber • bCB09_MinorNumber
70	ERR_70_WSP	N	N	3.0	0.0	4	Error occurs if all speed sensors are disturbed or the BOARD_CODING is faulty or the configuration of the extension board is faulty	• Verify software • Verify speed sensors are ok • Verify wiring is ok • Check board coding • Replace board	• bMB03_AlphaCode • bMB03_MajorNumber • bMB03_MinorNumber • bError_GE1 • bError_GE2
72	ERR_72_WSP	N	N	3.0	0.0	3	Error occurs if there is a speed sensor problem at just one axle.	• Verify software • Verify speed sensors are ok • Verify wiring is ok • Replace board	• bMB03_AlphaCode • bMB03_MajorNumber • bMB03_MinorNumber • bError_GE1 • bError_GE2

This document contains proprietary and confidential information of Knorr Brake Company, LLC.
No disclosure, reproduction, or use of any part may be made without written permission of Knorr Brake Company, LLC.

Knorr-Bremse Group

MB03_02 (Node #2)

MMI Code	Service Terminal Event Name	Major Fault	TOD	t_{come} (s)	t_{go} (s)	Display Priority	Possible Cause	Possible Corrective Action(s)	Data Logger Variables
73	ERR_73_WSP	N	N	3.0	0.0	3	Error occurs if there is a speed sensor problem at more than one axle	• Verify software • Verify speed sensors are ok • Verify wiring is ok • Replace board	• bMB03_AlphaCode • bMB03_MajorNumber • bMB03_MinorNumber • bError_GE1 • bError_GE2
A1	ERR_MB_WSP	N	N	3.0	0.0	3	Internal WSP error	• Verify software • Verify speed sensors are ok • Verify wiring is ok • Replace board	• bMB03_AlphaCode • bMB03_MajorNumber • bMB03_MinorNumber • bError_GE1 • bError_GE2
10	ERR_TIMEOUT_1_WSP	N	N	3.0	0.0	2	Dump Valve timeout for axle 1 has occurred	• Verify software • Verify speed sensors are ok • Verify wiring is ok • Replace board	• bMB03_AlphaCode • bMB03_MajorNumber • bMB03_MinorNumber • bError_GE1 • bError_GE2 • bWSPValveDLG • bWSPInputDLG
20	ERR_TIMEOUT_2_WSP	N	N	3.0	0.0	2	Dump Valve timeout for axle 2 has occurred	• Verify software • Verify speed sensors are ok • Verify wiring is ok • Replace board	• bMB03_AlphaCode • bMB03_MajorNumber • bMB03_MinorNumber • bError_GE1 • bError_GE2 • bWSPValveDLG • bWSPInputDLG

This document contains proprietary and confidential information of Knorr Brake Company, LLC.
No disclosure, reproduction, or use of any part may be made without written permission of Knorr Brake Company, LLC.

Knorr-Bremse Group

MB03_02 (Node #2)

MMI Code	Service Terminal Event Name	Major Fault	TOD	t_{come} (s)	t_{go} (s)	Display Priority	Possible Cause	Possible Corrective Action(s)	Data Logger Variables
30	ERR_TIMEOUT_3_WSP	N	N	3.0	0.0	2	Dump Valve timeout for axle 3 has occurred	• Verify software • Verify speed sensors are ok • Verify wiring is ok • Replace board	• bMB03_AlphaCode • bMB03_MajorNumber • bMB03_MinorNumber • bError_GE1 • bError_GE2 • bWSPValveDLG • bWSPInputDLG
40	ERR_TIMEOUT_4_WSP	N	N	3.0	0.0	2	Dump Valve timeout for axle 4 has occurred	• Verify software • Verify speed sensors are ok • Verify wiring is ok • Replace board	• bMB03_AlphaCode • bMB03_MajorNumber • bMB03_MinorNumber • bError_GE1 • bError_GE2 • bWSPValveDLG • bWSPInputDLG
11	ERR_FSI_1_WSP	N	N	5.0	0.4	2	Defective or improperly gapped speed sensor and/or faulty wiring to sensor	• Evaluate faulty speed sensor • Check for incorrect gapping • Check Speed Sensor wiring • Replace MB03_2 board	• lwSpeed_Axle_1_Freq • boSpeed_Axle_1UpToDate • bSpeed_Axle_1DC • bError_GE1 • bWSPInputDLG • wWSPvRefDLG
21	ERR_FSI_2_WSP	N	N	5.0	0.4	2	Defective or improperly gapped speed sensor and/or faulty wiring to sensor	• Evaluate faulty speed sensor • Check for incorrect gapping • Check Speed Sensor wiring • Replace MB03_2 board	• lwSpeed_Axle_2_Freq • boSpeed_Axle_2UpToDate • bSpeed_Axle_2DC • bError_GE1 • bWSPInputDLG • wWSPvRefDLG

This document contains proprietary and confidential information of Knorr Brake Company, LLC.
No disclosure, reproduction, or use of any part may be made without written permission of Knorr Brake Company, LLC.

Knorr-Bremse Group

MB03_02 (Node #2)

MMI Code	Service Terminal Event Name	Major Fault	TOD	t_{come} (s)	t_{go} (s)	Display Priority	Possible Cause	Possible Corrective Action(s)	Data Logger Variables
31	ERR_FSI_3_WSP	N	N	5.0	0.4	2	Defective or improperly gapped speed sensor and/or faulty wiring to sensor	• Evaluate faulty speed sensor • Check for incorrect gapping • Check Speed Sensor wiring • Replace MB03_2 board	• lwSpeed_Axle_3_Freq • boSpeed_Axle_3UpToDate • bSpeed_Axle_3DC • bError_GE2 • bWSPInputDLG • wWSPvRefDLG
41	ERR_FSI_4_WSP	N	N	5.0	0.4	2	Defective or improperly gapped speed sensor and/or faulty wiring to sensor	• Evaluate faulty speed sensor • Check for incorrect gapping • Check Speed Sensor wiring • Replace MB03_2 board	• lwSpeed_Axle_4_Freq • boSpeed_Axle_4UpToDate • bSpeed_Axle_4DC • bError_GE2 • bWSPInputDLG • wWSPvRefDLG
12	ERR_DV_1_WSP	N	Y	3.0	0.0	2	Error is the result of the validity check between all sensor speed signals. The check includes several tests to detect when a sensor is producing a faulty frequency output, i.e. ((40% of Vref) + 3km/h) for 3 seconds in braking, ((40% of Vref) + 3km/h) for 3 seconds in driving	• Verify software • Verify speed sensors are ok • Verify wiring is ok • Replace board	• bMB03_AlphaCode • bMB03_MajorNumber • bMB03_MinorNumber • lwSpeed_Axle_1_Freq • boSpeed_Axle_1UpToDate • bSpeed_Axle_1DC • bErr_GE2 • bWSPInputDLG • wWSPvRefDLG

This document contains proprietary and confidential information of Knorr Brake Company, LLC.
No disclosure, reproduction, or use of any part may be made without written permission of Knorr Brake Company, LLC.

Knorr-Bremse Group

MB03_02 (Node #2)

MMI Code	Service Terminal Event Name	Major Fault	TOD	t_{come} (s)	t_{go} (s)	Display Priority	Possible Cause	Possible Corrective Action(s)	Data Logger Variables
22	ERR_DV_2_WSP	N	Y	3.0	0.0	2	Error is the result of the validity check between all sensor speed signals. The check includes several tests to detect when a sensor is producing a faulty frequency output, i.e. ((40% of Vref) + 3km/h) for 3 seconds in braking, ((40% of Vref) + 3km/h) for 3 seconds in driving	• Verify software • Verify speed sensors are ok • Verify wiring is ok • Replace board	• bMB03_AlphaCode • bMB03_MajorNumber • bMB03_MinorNumber • lwSpeed_Axle_2_Freq • boSpeed_Axle_2UpToDate • bSpeed_Axle_2DC • bErr_GE2 • bWSPInputDLG • wWSPvRefDLG
32	ERR_DV_3_WSP	N	Y	3.0	0.0	2	Error is the result of the validity check between all sensor speed signals. The check includes several tests to detect when a sensor is producing a faulty frequency output, i.e. ((40% of Vref) + 3km/h) for 3 seconds in braking, ((40% of Vref) + 3km/h) for 3 seconds in driving	• Verify software • Verify speed sensors are ok • Verify wiring is ok • Replace board	• bMB03_AlphaCode • bMB03_MajorNumber • bMB03_MinorNumber • lwSpeed_Axle_3_Freq • boSpeed_Axle_3UpToDate • bSpeed_Axle_3DC • bErr_GE2 • bWSPInputDLG • wWSPvRefDLG
42	ERR_DV_4_WSP	N	Y	3.0	0.0	2	Error is the result of the validity check between all sensor speed signals. The check includes several tests to detect when a sensor is producing a faulty frequency output, i.e. ((40% of Vref) + 3km/h) for 3 seconds in braking, ((40% of Vref) + 3km/h) for 3 seconds in driving	• Verify software • Verify speed sensors are ok • Verify wiring is ok • Replace board	• bMB03_AlphaCode • bMB03_MajorNumber • bMB03_MinorNumber • lwSpeed_Axle_4_Freq • boSpeed_Axle_4UpToDate • bSpeed_Axle_4DC • bErr_GE2 • bWSPInputDLG • wWSPvRefDLG

This document contains proprietary and confidential information of Knorr Brake Company, LLC.
No disclosure, reproduction, or use of any part may be made without written permission of Knorr Brake Company, LLC.

Knorr-Bremse Group

MB03_02 (Node #2)

MMI Code	Service Terminal Event Name	Major Fault	TOD	t_{come} (s)	t_{go} (s)	Display Priority	Possible Cause	Possible Corrective Action(s)	Data Logger Variables
13	ERR_SHORT_VALVE1_WSP	N	N	3.0	0.0	2	Short circuit in the power output stage POP11	• Evaluate faulty or incorrect wiring/valve configuration • Replace MB03_2 board	• N/A
14	ERR_OPEN_VALVE1_WSP	N	N	3.0	0.0	2	Open circuit in the power output stage POP11	• Evaluate faulty or incorrect wiring/valve configuration • Replace MB03_2 board	• N/A
15	ERR_UWR_TIMEOUT_1_WSP	N	N	3.0	0.0	2	The safety monitor was deemed defective during the WSP test run	• Replace the MB03 board	• N/A
17	ERR_LOGIC_TIMEOUT_1_WSP	N	N	3.0	0.0	2	Indicates that the maximum admissible actuation time has exceeded for controlling the wheel slip and the WSP control has been aborted for axle 1	• Not typically caused by hardware malfunction but is an indication of extremely low adhesion conditions	• wWSPvWheelDLG1 • wWSPvRefDLG • bWSPInputDLG • bWSPValveDLG • boWSPTriggerDLG3
18	ERR_WHEELSET_1_WSP	N	N	3.0	0.0	2	Group error for wheel-set 1	• Evaluate individual errors from group	• bError_GE1 • bError_GE2 • boWSPTriggerDLG3 • bWSPValveDLG
NMMM	ERR_NO_MOTION_MISMATCH	N	Y	6.0	3.0	3	No motion mismatch between relay output and no motion input; only applicable to PT-A	• Mismatch between the no motion output and the no motion input received by ESRA;	• boH_FB_NoMotion_Input • boH_FB_NoMotion_Relay • boH_Location
MT01	ERR_ACCESS_TO_MASTERERRORTAB_1	Y	Y	3.0	3.0	3	Error reading master error of node 1	• Check for correct software • Replace board	• N/A
MT22	ERR_ACCESS_TO_MASTERERRORTAB_22	Y	Y	3.0	3.0	3	Error reading master error of node 22	• Check for correct software • Replace board	• N/A
MT28	ERR_ACCESS_TO_MASTERERRORTAB_28	Y	Y	3.0	3.0	3	Error reading master error of node 28	• Check for correct software • Replace board	• N/A

This document contains proprietary and confidential information of Knorr Brake Company, LLC.
No disclosure, reproduction, or use of any part may be made without written permission of Knorr Brake Company, LLC.

Knorr-Bremse Group

[5] Fault within GRP5 group fault

3.2.3 CB09_22 (Node #22)

MMI Code	Service Terminal Event Name	Major Fault	TOD	t_{come} (s)	t_{go} (s)	Display Priority	Possible Cause	Possible Corrective Action(s)	Data Logger Variables
CC22	ERR_CB09_22_CAN_COM [5]	Y	Y	3.0	0.0	1	Communication error on ESRA system bus	• Check ESRA–System bus • Replace board • Confirm correct software loaded	• bCB09_AlphaCode • bCB09_MajorNumber • bCB09_MinorNumber
NA22	ERR_CB09_22_NV_ACCESS [5]	Y	Y	0.0	0.0	1	Error by reading net variable	• Check ESRA–System bus • Replace board • Confirm correct software loaded	• bMB04_AlphaCode • bMB04_MajorNumber • bMB04_MinorNumber • bMB03_AlphaCode • bMB03_MajorNumber • bMB03_MinorNumber • bCB09_AlphaCode • bCB09_MajorNumber • bCB09_MinorNumber • bCB12_AlphaCode • bCB12_MajorNumber • bCB12_MinorNumber
TO22	ERR_CB09_22_NV_TIMEOUT [5]	Y	Y	3.0	0.0	1	The CB09_22 board reports this error when it is unable to receive at least one of the expected network variables with the initial setpoints	• Check ESRA system bus • Replace the other board(s) that is required to send the NV information to this board. • This board is typically not the problem	• bMB04_AlphaCode • bMB04_MajorNumber • bMB04_MinorNumber • bMB03_AlphaCode • bMB03_MajorNumber • bMB03_MinorNumber • bCB09_AlphaCode • bCB09_MajorNumber • bCB09_MinorNumber • bCB12_AlphaCode • bCB12_MajorNumber • bCB12_MinorNumber

This document contains proprietary and confidential information of Knorr Brake Company, LLC.
No disclosure, reproduction, or use of any part may be made without written permission of Knorr Brake Company, LLC.

Knorr-Bremse Group

CB09_22 (Node #22)

[5] Fault within GRP5 group fault

MMI Code	Service Terminal Event Name	Major Fault	TOD	t_{come} (s)	t_{go} (s)	Display Priority	Possible Cause	Possible Corrective Action(s)	Data Logger Variables
IO22	ERR_CB09_22_DRV_IO_ACCESS [5]	Y	Y	0.0	0.0	1	Error reading inputs or writing outputs of this board	• Confirm correct software loaded • Replace board.	• bCB09_AlphaCode • bCB09_MajorNumber • bCB09_MinorNumber
AF22	ERR_CB09_22_ACTIVATE_FCT [5]	Y	Y	0.0	0.0	1	Function activation error	• Confirm correct software loaded • Replace board.	• bCB09_AlphaCode • bCB09_MajorNumber • bCB09_MinorNumber
CF22	ERR_CB09_22_CONFIGURATION [5]	Y	Y	0.0	0.0	1	Software configuration error	• Confirm correct software loaded • Replace board.	• bCB09_AlphaCode • bCB09_MajorNumber • bCB09_MinorNumber
ER22	ERR_CB09_22_EEP_FAILURE [5]	Y	Y	0.2	0.0	1	EEPROM defective	• Change CB09 board • Confirm correct software loaded	• bCB09_AlphaCode • bCB09_MajorNumber • bCB09_MinorNumber
X122	ERR_CB09_22_BOARD_CODING [5]	Y	Y	1.0	0.0	1	NOTE: coding errors do not apply to communications cards	• N/A.	• N/A
GRP5	ERR_CB09_22_GENERAL_ERROR	Y	Y	1.0	3.0	3	Internal Card Errors occurred on the CB09. CB09_22_CAN_COM; CB09_22_NV_ACCESS; CB09_22_NV_TIMEOUT; CB09_22_DRV_IO_ACCES; CB09_22_ACTIVATE_FCT; CB09_22_CONFIGURATIO; CB09_22_EEP_FAILURE; CB09_22_BOARD_CODING	• Refer to individual event entry	• N/A
CO22	ERR_CB09_22_CB09_MVBC	Y	Y	0.0	0.0	1	The periodic supervision of the MVBC Chip has detected a failure due to abnormal hardware or software behavior	• Confirm correct software loaded • Replace board.	• bCB09_AlphaCode • bCB09_MajorNumber • bCB09_MinorNumber

This document contains proprietary and confidential information of Knorr Brake Company, LLC.
No disclosure, reproduction, or use of any part may be made without written permission of Knorr Brake Company, LLC.

Knorr-Bremse Group

CB09_22 (Node #22)

MMI Code	Service Terminal Event Name	Major Fault	TOD	t_{come} (s)	t_{go} (s)	Display Priority	Possible Cause	Possible Corrective Action(s)	Data Logger Variables
0101	ERR_KN_1_NV_1_TIMEOUT	Y	Y	1.0	0.0	1	The CB09 board reports this error when it is unable to receive at least one of the expected network variables with the initial setpoints.	• Check ESRA system bus • Replace the other board(s) that is required to send the NV information to this board. • This board is typically not the problem	• bMB04_AlphaCode • bMB04_MajorNumber • bMB04_MinorNumber • bCB09_AlphaCode • bCB09_MajorNumber • bCB09_MinorNumber
0102	ERR_KN_1_NV_2_TIMEOUT	Y	Y	1.0	0.0	1	The CB09 board reports this error when it is unable to receive at least one of the expected network variables with the initial setpoints.	• Check ESRA system bus • Replace the other board(s) that is required to send the NV information to this board. • This board is typically not the problem	• bMB04_AlphaCode • bMB04_MajorNumber • bMB04_MinorNumber • bCB09_AlphaCode • bCB09_MajorNumber • bCB09_MinorNumber
0203	ERR_KN_2_NV_3_TIMEOUT	Y	Y	1.0	0.0	1	The CB09 board reports this error when it is unable to receive at least one of the expected network variables with the initial setpoints.	• Check ESRA system bus • Replace the other board(s) that is required to send the NV information to this board. • This board is typically not the problem	• bMB03_AlphaCode • bMB03_MajorNumber • bMB03_MinorNumber • bCB09_AlphaCode • bCB09_MajorNumber • bCB09_MinorNumber
0210	ERR_KN_2_NV_10_TIMEOUT	Y	Y	1.0	0.0	1	The CB09 board reports this error when it is unable to receive at least one of the expected network variables with the initial setpoints.	• Check ESRA system bus • Replace the other board(s) that is required to send the NV information to this board. • This board is typically not the problem	• bMB03_AlphaCode • bMB03_MajorNumber • bMB03_MinorNumber • bCB09_AlphaCode • bCB09_MajorNumber • bCB09_MinorNumber

This document contains proprietary and confidential information of Knorr Brake Company, LLC.
No disclosure, reproduction, or use of any part may be made without written permission of Knorr Brake Company, LLC.

Knorr-Bremse Group

CB09_22 (Node #22)

[8] Fault within GRP8 group fault

MMI Code	Service Terminal Event Name	Major Fault	TOD	t_{come} (s)	t_{go} (s)	Display Priority	Possible Cause	Possible Corrective Action(s)	Data Logger Variables
2801	ERR_KN_28_NV_1_TIMEOUT	Y	Y	1.0	0.0	1	The CB09 board reports this error when it is unable to receive at least one of the expected network variables with the initial setpoints.	• Check ESRA system bus • Replace the other board(s) that is required to send the NV information to this board. • This board is typically not the problem	• bCB09_AlphaCode • bCB09_MajorNumber • bCB09_MinorNumber • bCB12_AlphaCode • bCB12_MajorNumber • bCB12_MinorNumber
P100	ERR_MVB_PORT_100 [8]	Y	Y	1.0	1.0	3	An error has been detected in receiving information on Port 100 of the MVB	• -Confirm MVB bus is operational • -replace CB09 board	• bCB09_AlphaCode • bCB09_MajorNumber • bCB09_MinorNumber • bPort100_ErrorCode
P150	ERR_MVB_PORT_150 [8]	Y	Y	1.0	1.0	3	An error has been detected in receiving information on Port 150 of the MVB	• -Confirm MVB bus is operational • -replace CB09 board	• bCB09_AlphaCode • bCB09_MajorNumber • bCB09_MinorNumber • bPort150_ErrorCode
P512	ERR_MVB_PORT_512 [8]	Y	Y	1.0	1.0	3	An error has been detected in receiving information on Port 512 of the MVB	• -Confirm MVB bus is operational • -replace CB09 board	• bCB09_AlphaCode • bCB09_MajorNumber • bCB09_MinorNumber • bPort512_ErrorCode
P640	ERR_MVB_PORT_640 [8]	Y	Y	1.0	1.0	3	An error has been detected in receiving information on Port 640 of the MVB	• -Confirm MVB bus is operational • -replace CB09 board	• bCB09_AlphaCode • bCB09_MajorNumber • bCB09_MinorNumber • bPort640_ErrorCode

This document contains proprietary and confidential information of Knorr Brake Company, LLC.
No disclosure, reproduction, or use of any part may be made without written permission of Knorr Brake Company, LLC.

Knorr-Bremse Group

3.2.4 CB12_28 (Node #28)

[6] Fault within GRP6 group fault

MMI Code	Service Terminal Event Name	Major Fault	TOD	t_{come} (s)	t_{go} (s)	Display Priority	Possible Cause	Possible Corrective Action(s)	Data Logger Variables
CC28	ERR_CB12_28_CAN_COM [6]	Y	Y	3.0	3.0	1	Communication error on ESRA system bus	• Check ESRA–System bus • Replace board • Confirm correct software loaded	• bCB12_AlphaCode • bCB12_MajorNumber • bCB12_MinorNumber
NA28	ERR_CB12_28_NV_ACCESS [6]	Y	Y	3.0	0.0	1	Error by reading net variable	• Check ESRA–System bus • Replace board • Confirm correct software loaded	• bMB04_AlphaCode • bMB04_MajorNumber • bMB04_MinorNumber • bMB03_AlphaCode • bMB03_MajorNumber • bMB03_MinorNumber • bCB09_AlphaCode • bCB09_MajorNumber • bCB09_MinorNumber • bCB12_AlphaCode • bCB12_MajorNumber • bCB12_MinorNumber
TO28	ERR_CB12_28_NV_TIMEOUT [6]	Y	Y	3.0	0.0	1	The CB12_28 board reports this error when it is unable to receive at least one of the expected network variables with the initial setpoints	• Check ESRA system bus • Replace the other board(s) that is required to send the NV information to this board. • This board is typically not the problem	• bMB04_AlphaCode • bMB04_MajorNumber • bMB04_MinorNumber • bMB03_AlphaCode • bMB03_MajorNumber • bMB03_MinorNumber • bCB09_AlphaCode • bCB09_MajorNumber • bCB09_MinorNumber • bCB12_AlphaCode • bCB12_MajorNumber • bCB12_MinorNumber

This document contains proprietary and confidential information of Knorr Brake Company, LLC.
No disclosure, reproduction, or use of any part may be made without written permission of Knorr Brake Company, LLC.

Knorr-Bremse Group

CB12_28 (Node #28)

[6] Fault within GRP6 group fault

MMI Code	Service Terminal Event Name	Major Fault	TOD	t_{come} (s)	t_{go} (s)	Display Priority	Possible Cause	Possible Corrective Action(s)	Data Logger Variables
IO28	ERR_CB12_28_DRV_IO_ACCESS [6]	Y	Y	3.0	0.0	1	Error reading inputs or writing outputs of this board	• Confirm correct software loaded • Replace board.	• bCB12_AlphaCode • bCB12_MajorNumber • bCB12_MinorNumber
AF28	ERR_CB12_28_ACTIVATE_FCT [6]	Y	Y	3.0	0.0	1	Function activation error	• Confirm correct software loaded • Replace board.	• bCB12_AlphaCode • bCB12_MajorNumber • bCB12_MinorNumber
CF28	ERR_CB12_28_CONFIGURATION [6]	Y	Y	3.0	0.0	1	Software configuration error	• Confirm correct software loaded • Replace board.	• bCB12_AlphaCode • bCB12_MajorNumber • bCB12_MinorNumber
ER28	ERR_CB12_28_EEP_FAILURE [6]	Y	Y	3.0	0.0	1	EEPROM defective	• Change CB12 board • Confirm correct software loaded	• bCB12_AlphaCode • bCB12_MajorNumber • bCB12_MinorNumber
CD28	ERR_CB12_28_BOARD_CODING [6]	Y	Y	3.0	0.0	1	NOTE: coding errors do not apply to communications cards	• N/A	• N/A
GRP6	ERR_CB12_28_GENERAL_ERROR	Y	Y	3.0	1.0	3	Internal Card Errors occurred on the CB12. CB12_28_CAN_COM; CB12_28_NV_ACCESS; CB12_28_NV_TIMEOUT; CB12_28_DRV_IO_ACCES; CB12_28_ACTIVATE_FCT; CB12_28_CONFIGURATIO; CB12_28_EEP_FAILURE; CB12_28_BOARD_CODING	• Refer to individual event entry	• N/A
RTCR	AE_ERR_CB12_28_RTC_READ	N	N	3.0	0.0	3	The CB12 has detected an error reading the Real Time Clock	• Confirm correct software loaded • Replace board.	• bCB12_AlphaCode • bCB12_MajorNumber • bCB12_MinorNumber

This document contains proprietary and confidential information of Knorr Brake Company, LLC.
No disclosure, reproduction, or use of any part may be made without written permission of Knorr Brake Company, LLC.

Knorr-Bremse Group

CB12_28 (Node #28)

MMI Code	Service Terminal Event Name	Major Fault	TOD	t_{come} (s)	t_{go} (s)	Display Priority	Possible Cause	Possible Corrective Action(s)	Data Logger Variables
0102	AE_ERR_KN_1_NV_2_TIMEOUT_28	Y	Y	3.0	0.0	3	Incorrect software installed Defective board Defective backplane	• Check ESRA system bus • Replace the other board(s) that is required to send the NV information to this board. • This board is typically not the problem	• bCB12_AlphaCode • bCB12_MajorNumber • bCB12_MinorNumber • bMB04_AlphaCode • bMB04_MajorNumber • bMB04_MinorNumber
0210	AE_ERR_KN_2_NV_10_TIMEOUT_28	Y	Y	3.0	0.0	3	Incorrect software installed Defective board Defective backplane	• Check ESRA system bus • Replace the other board(s) that is required to send the NV information to this board. • This board is typically not the problem	• bCB12_AlphaCode • bCB12_MajorNumber • bCB12_MinorNumber • bMB03_AlphaCode • bMB03_MajorNumber • bMB03_MinorNumber
0403	AE_ERR_KN_4_NV_3_TIMEOUT_28	Y	Y	3.0	0.0	1	Incorrect software installed Defective board Defective backplane	• Check ESRA system bus • Replace the other board(s) that is required to send the NV information to this board. • This board is typically not the problem	• bCB12_AlphaCode • bCB12_MajorNumber • bCB12_MinorNumber • bMB04_AlphaCode • bMB04_MajorNumber • bMB04_MinorNumber
2201	AE_ERR_KN_22_NV_1_TIMEOUT_28	Y	Y	3.0	0.0	1	Incorrect software installed Defective board Defective backplane	• Check ESRA system bus • Replace the other board(s) that is required to send the NV information to this board. • This board is typically not the problem	• bCB12_AlphaCode • bCB12_MajorNumber • bCB12_MinorNumber • bCB09_AlphaCode • bCB09_MajorNumber • bCB09_MinorNumber
VM28	ERR_CB12_28_CB12_HWSD	Y	Y	3.0	0.0	4	Hardware issue with CB12 card	• Confirm correct software loaded • Replace board.	• bCB12_AlphaCode • bCB12_MajorNumber • bCB12_MinorNumber

This document contains proprietary and confidential information of Knorr Brake Company, LLC.
No disclosure, reproduction, or use of any part may be made without written permission of Knorr Brake Company, LLC.

Knorr-Bremse Group

CB12_28 (Node #28)

MMI Code	Service Terminal Event Name	Major Fault	TOD	t_{come} (s)	t_{go} (s)	Display Priority	Possible Cause	Possible Corrective Action(s)	Data Logger Variables
ET28	ERR_CB12_28_CB12_ETH_HARDWARE	N	N	3.0	0.0	2	Ethernet Controller faulty	• Confirm correct software loaded • Replace board.	• bCB12_AlphaCode • bCB12_MajorNumber • bCB12_MinorNumber

This document contains proprietary and confidential information of Knorr Brake Company, LLC.
No disclosure, reproduction, or use of any part may be made without written permission of Knorr Brake Company, LLC.

Knorr-Bremse Group