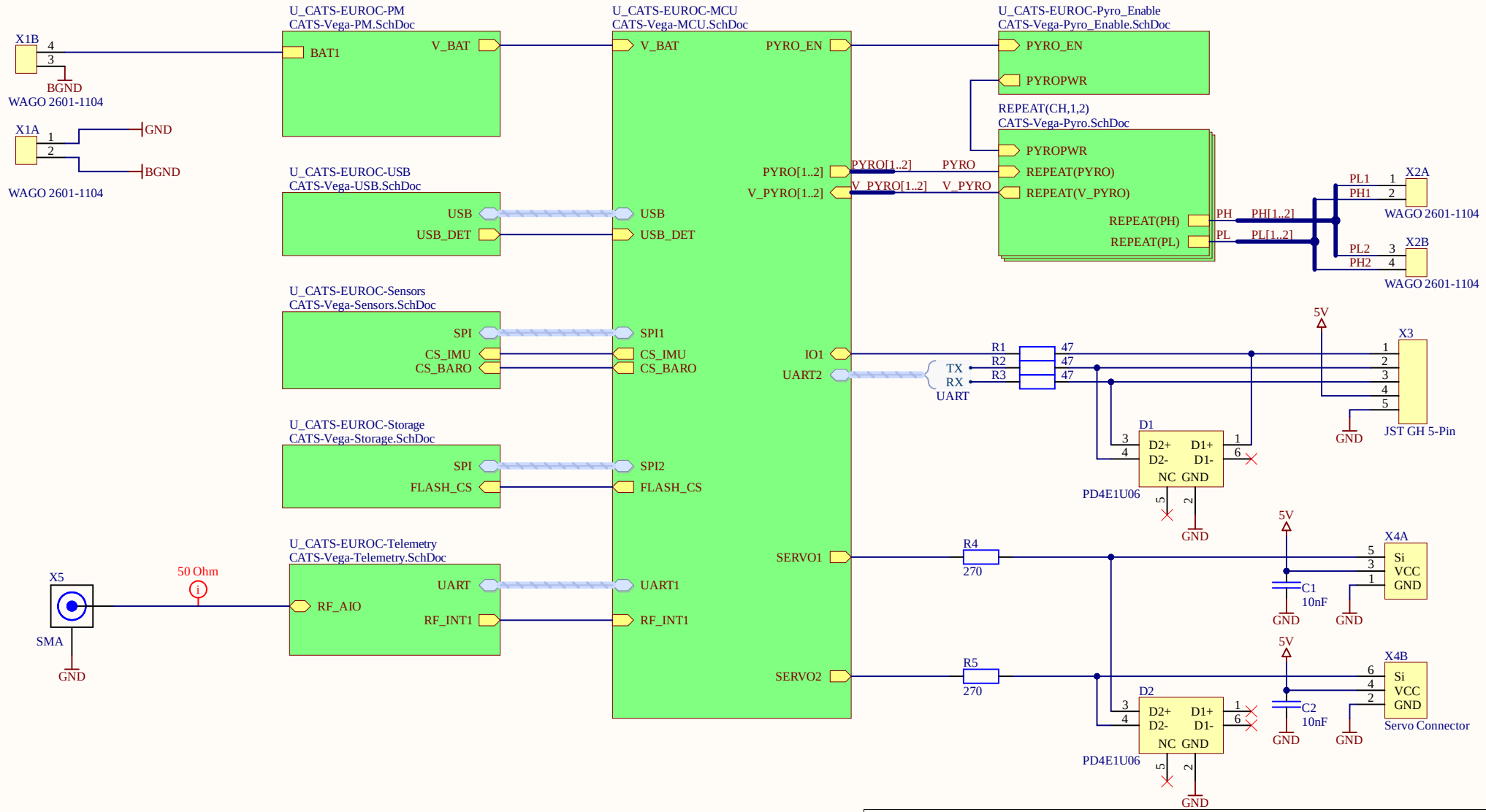

Title **CATS Vega**

Subtitle **Overview**

Author: *Luca Jost*	Date: 15/12/2022	Rev: V1.0
File: CATS-Vega-Overview.SchDoc		Sheet 1 of 16

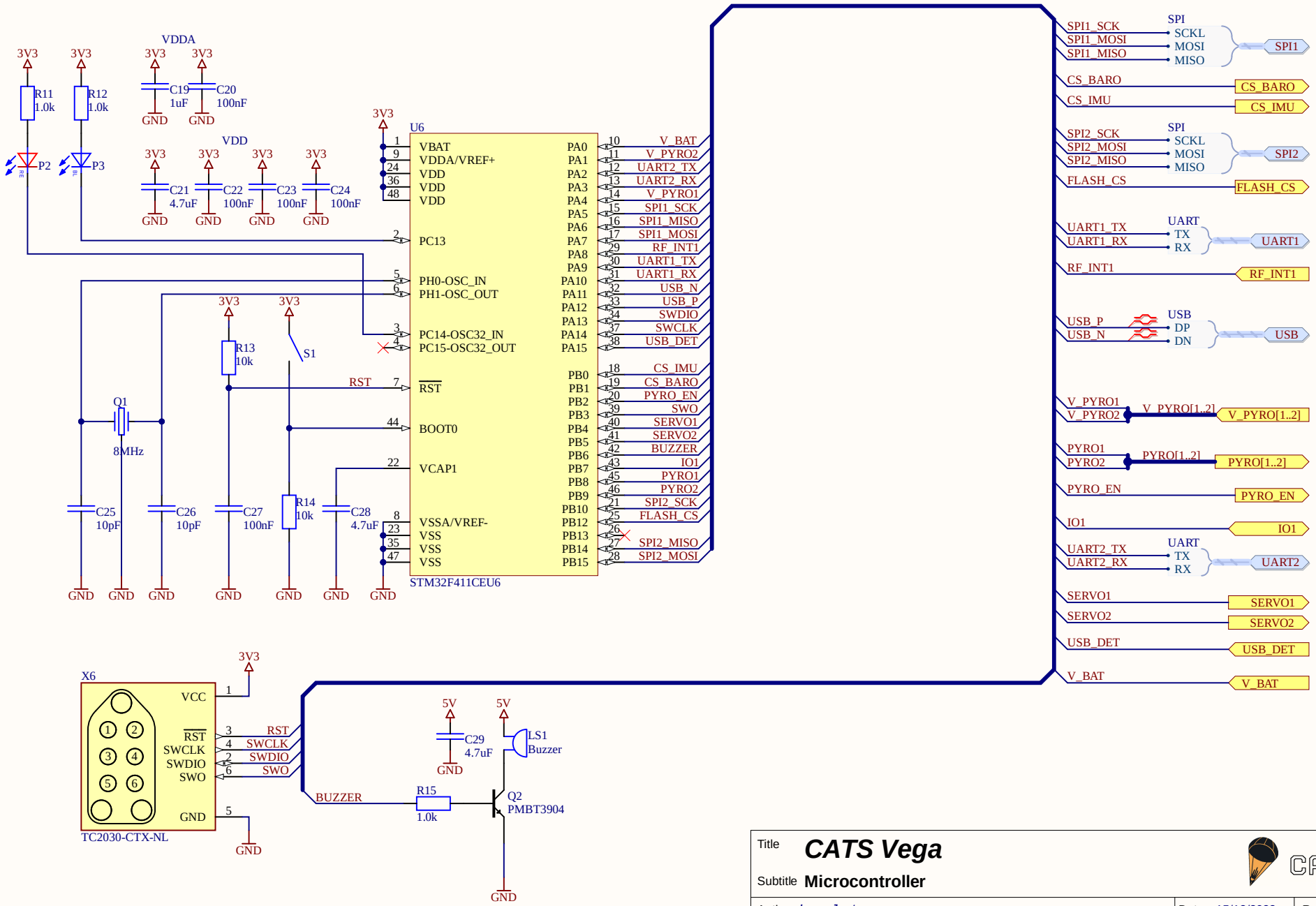

Title **CATS Vega**

Subtitle **Microcontroller**

CATS

Author: *Luca Jost*	Date: 15/12/2022	Rev: V1.1
File: CATS-Vega-MCU.SchDoc		Sheet 2 of 16

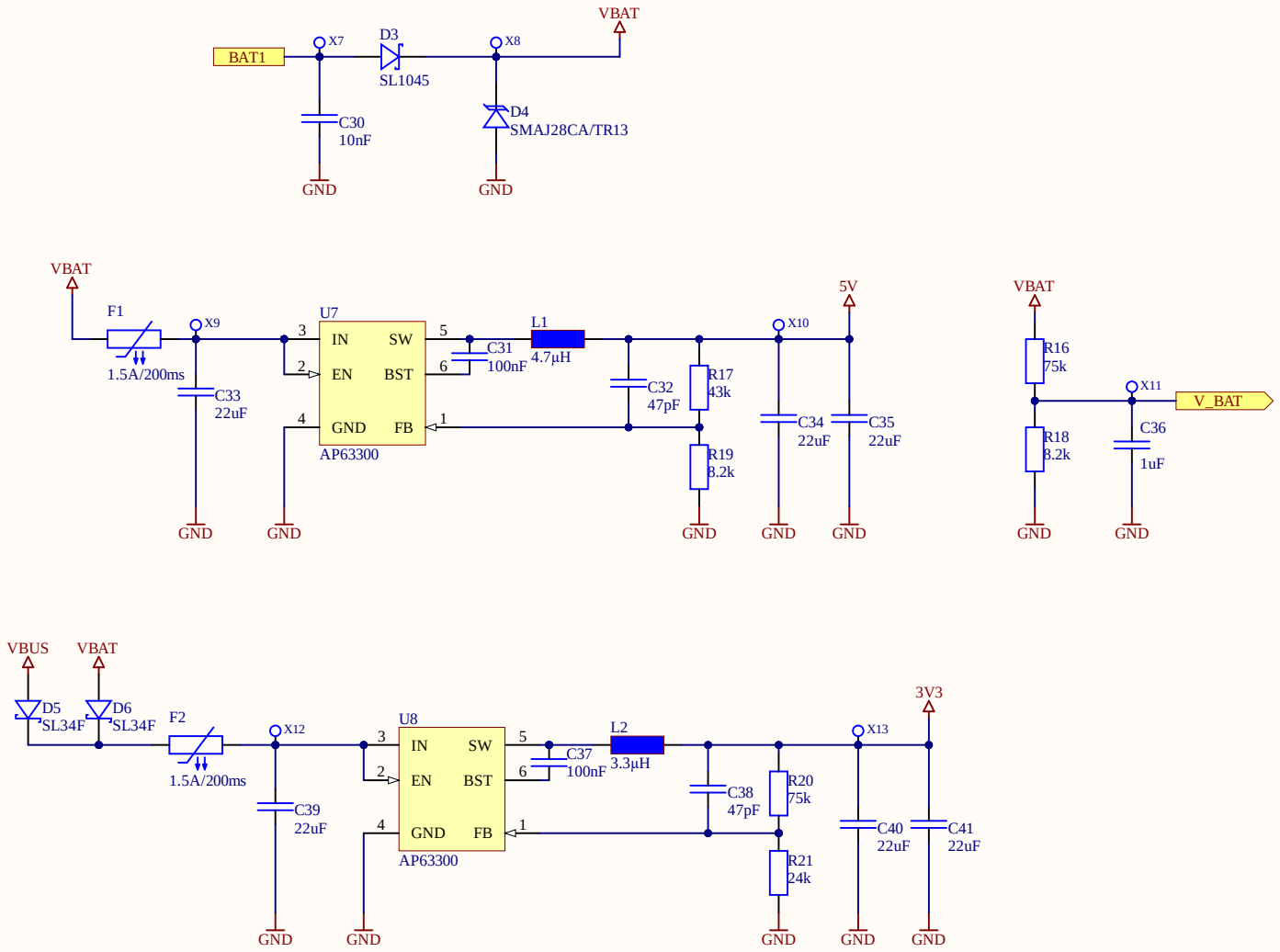

Title **CATS Vega**		
Subtitle **Power Management**		
Author: *Luca Jost*	Date: 15/12/2022	Rev: V1.0
File: CATS-Vega-PM.SchDoc		Sheet 3 of 16

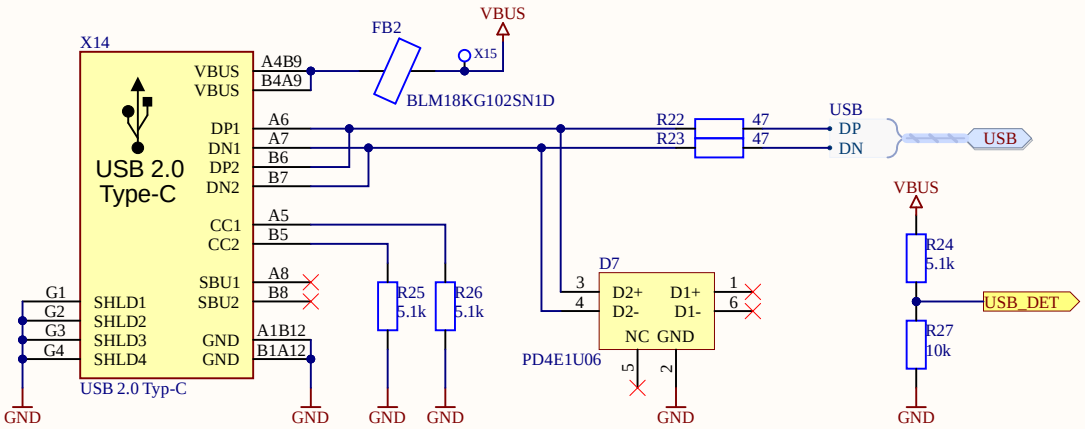

Title	**CATS Vega**		
Subtitle	**USB Connector**		
Author: *Luca Jost*		Date: 15/12/2022	Rev: V1.0
File: CATS-Vega-USB.SchDoc			Sheet 4 of 16

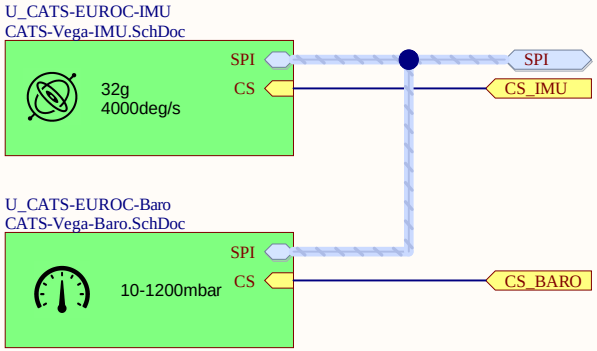

Title	***CATS Vega***		
Subtitle	**Sensors**		
Author: *Luca Jost*		Date: 15/12/2022	Rev: V1.0
File: CATS-Vega-Sensors.SchDoc			Sheet 5 of 16

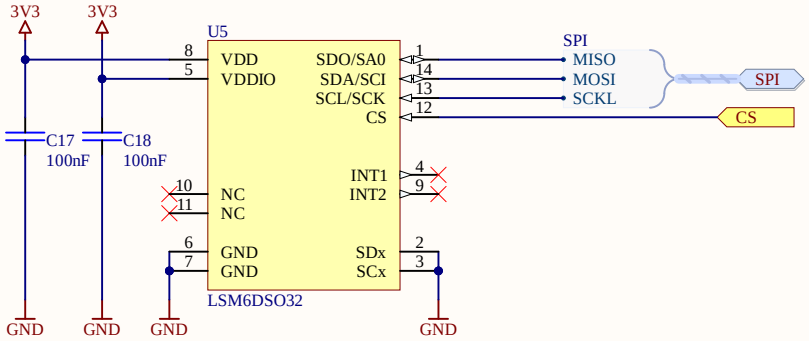

3-Axis Gyro + Accelerometer

Title **CATS Vega**		
Subtitle **Inertial Measurement Unit**		
Author: *Luca Jost*	Date: 15/12/2022	Rev: V1.0
File: CATS-Vega-IMU.SchDoc		Sheet 6 of 16

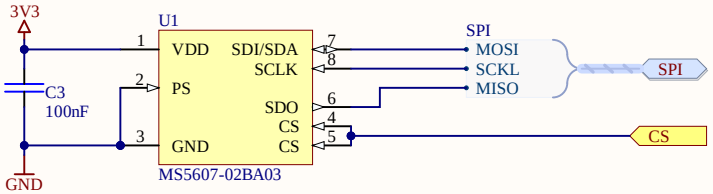

Title **CATS Vega**

Subtitle **Barometer**

Author: *Luca Jost*	Date: 15/12/2022	Rev: V1.0
File: CATS-Vega-Baro.SchDoc		Sheet 7 of 16

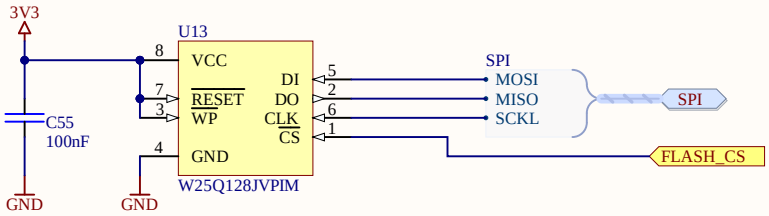

Title **CATS Vega**			
Subtitle **Storage**			
Author: *Luca Jost*	Date: 15/12/2022	Rev: V1.0	
File: CATS-Vega-Storage.SchDoc		Sheet 8 of 16	

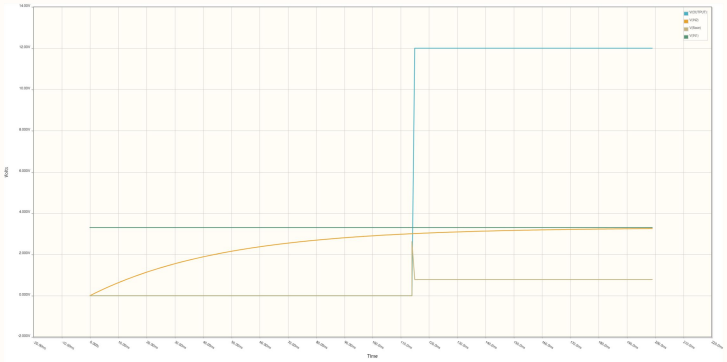

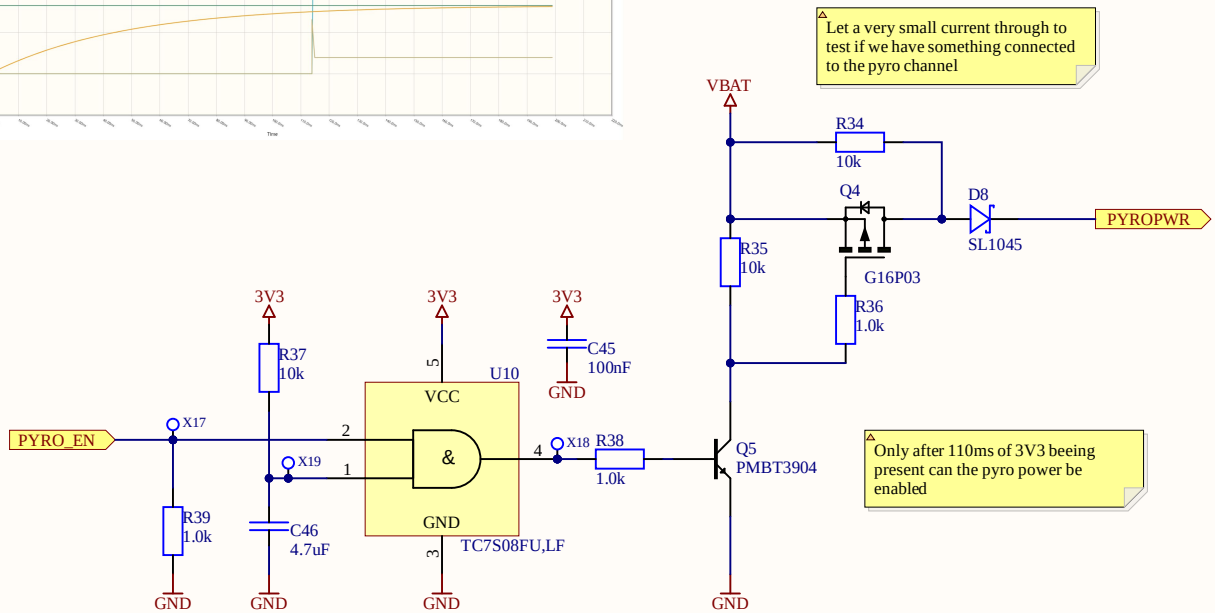

Title	**CATS Vega**		
Subtitle	**Pyro Power Enable**		
Author: *Luca Jost*		Date: 15/12/2022	Rev: V1.0
File: CATS-Vega-Pyro_Enable.SchDoc			Sheet 9 of 16

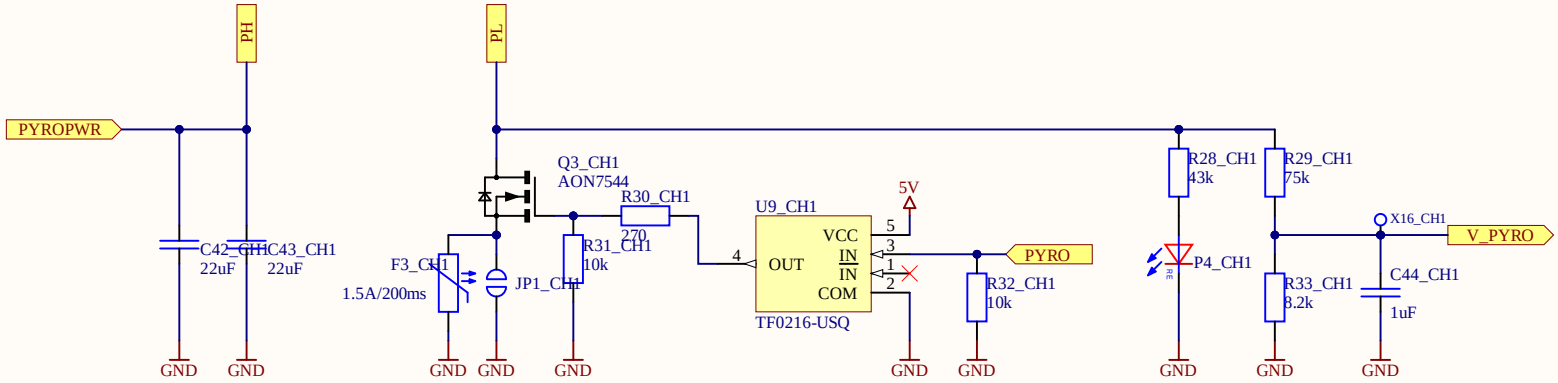

Title	**CATS Vega**		
Subtitle	**Pyro Channel**		
Author: *Luca Jost*		Date: 15/12/2022	Rev: V1.0
File: CATS-Vega-Pyro.SchDoc			Sheet 10 of 16

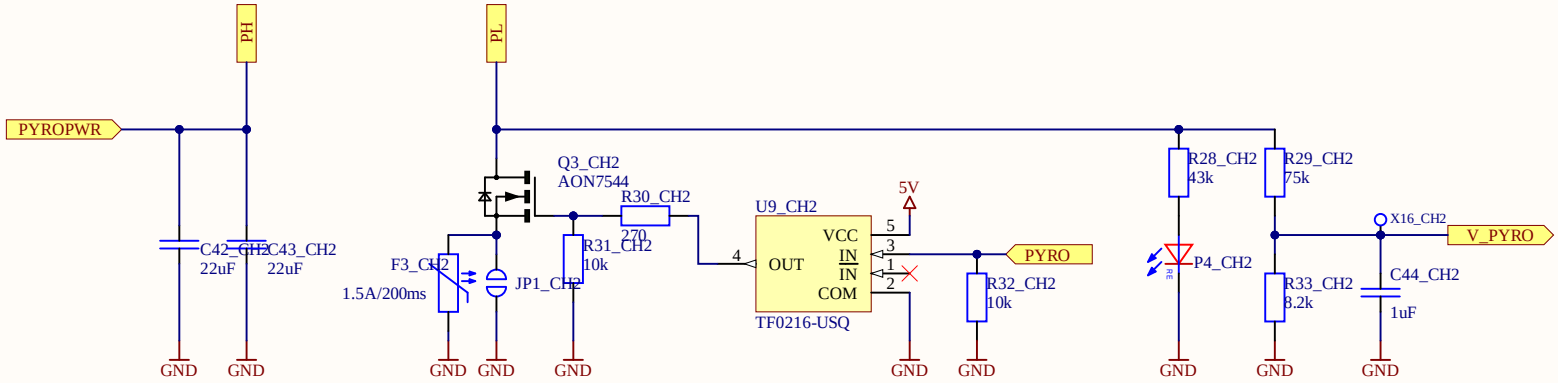

Title	**CATS Vega**		
Subtitle	**Pyro Channel**		
Author: *Luca Jost*		Date: 15/12/2022	Rev: V1.0
File: CATS-Vega-Pyro.SchDoc			Sheet 10of 16

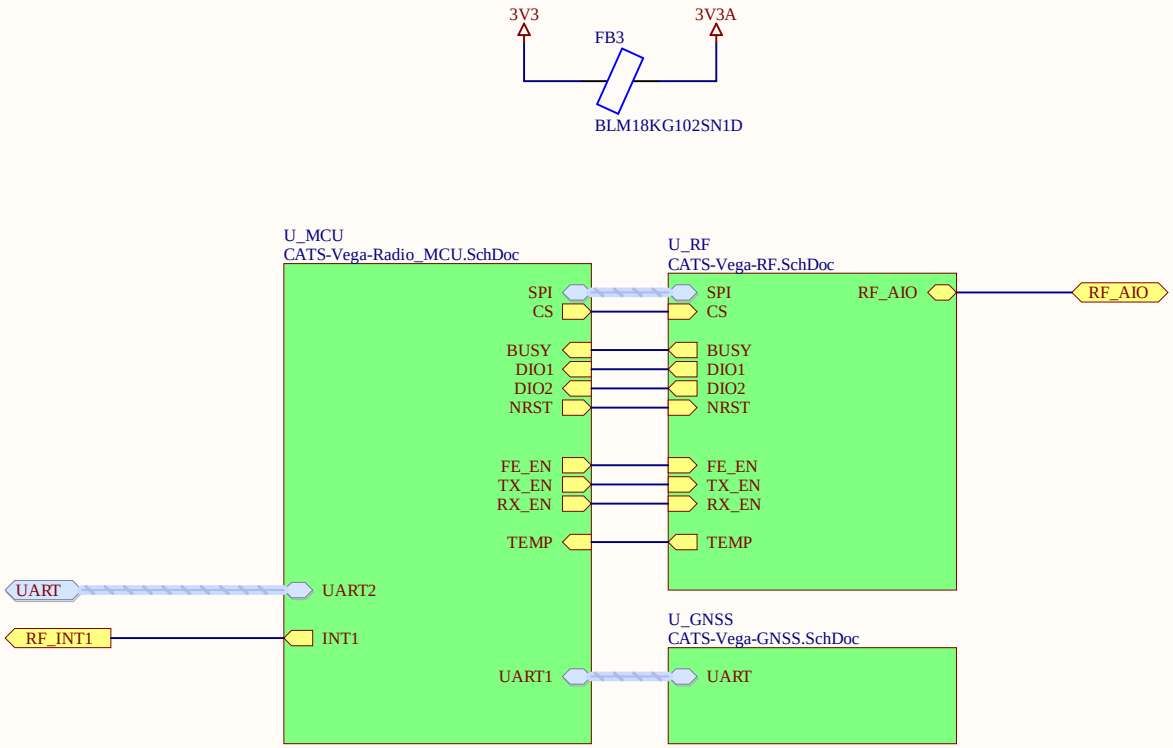

Title	***CATS Vega***		
Subtitle	**Telemetry**		
Author: *Luca Jost*		Date: 15/12/2022	Rev: V1.0
File: CATS-Vega-Telemetry.SchDoc			Sheet 11 of 16

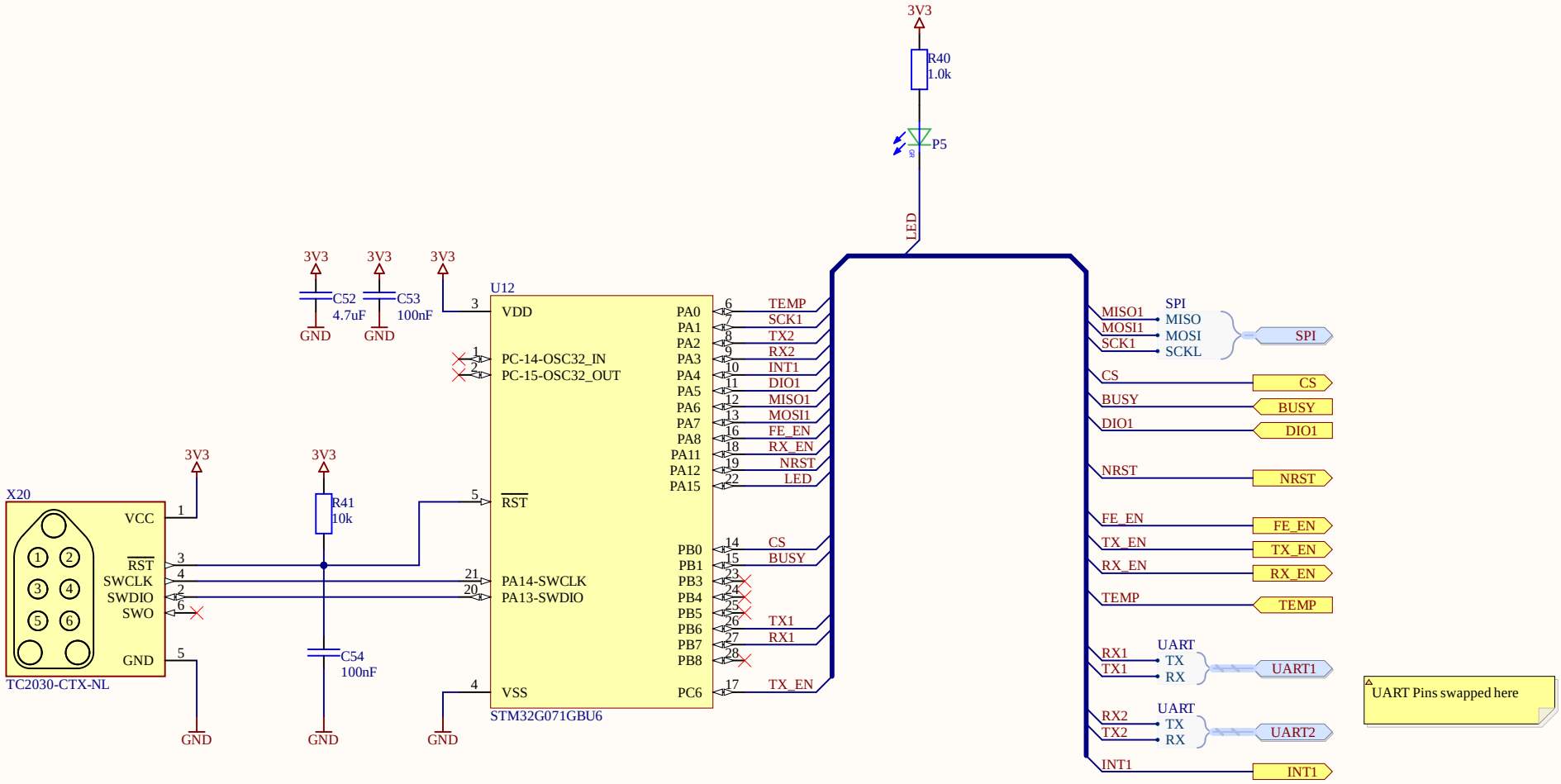

Title **CATS Vega**

Subtitle **Radio Microprocessor**

CATS

Author: *Luca Jost*	Date: 15/12/2022	Rev: V1.0
File: CATS-Vega-Radio_MCU.SchDoc		Sheet 12of 16

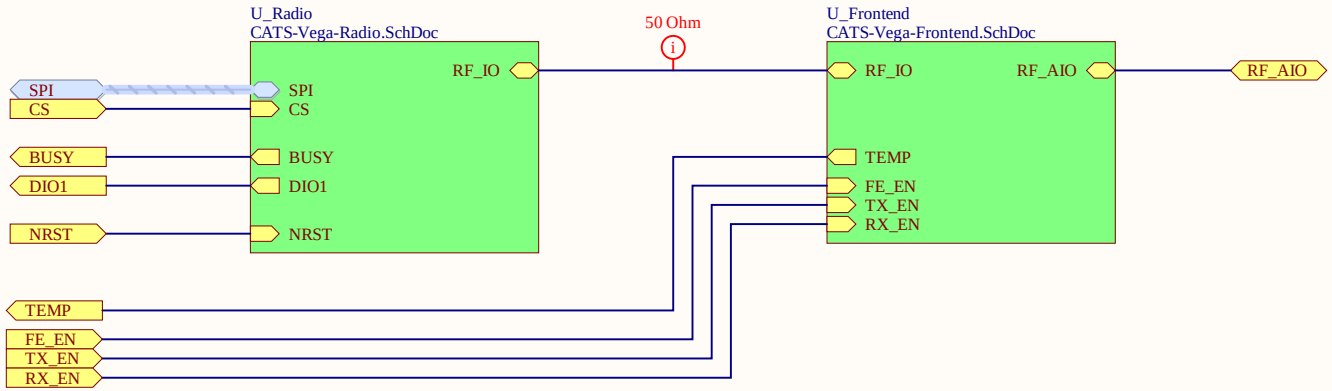

Title	***CATS Vega***		
Subtitle	**RF**		
Author: *Luca Jost*		Date: 15/12/2022	Rev: V1.0
File: CATS-Vega-RF.SchDoc			Sheet 13of 16

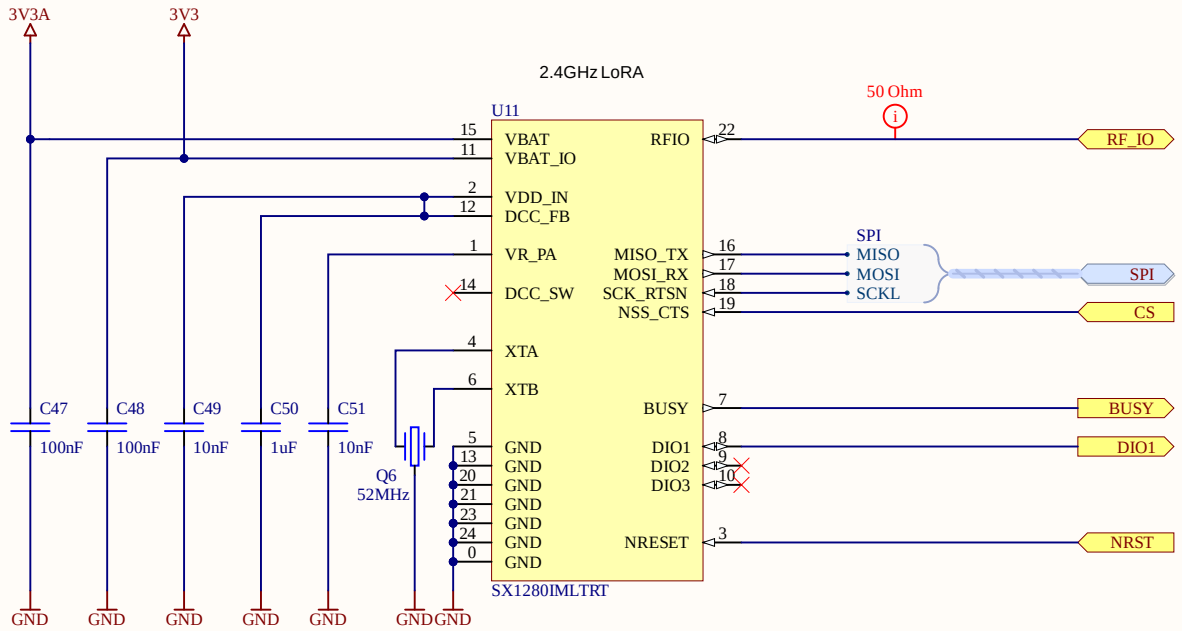

Title **CATS Vega**		
Subtitle **Radio**		
Author: *Luca Jost*	Date: 15/12/2022	Rev: V1.0
File: CATS-Vega-Radio.SchDoc		Sheet 14of 16

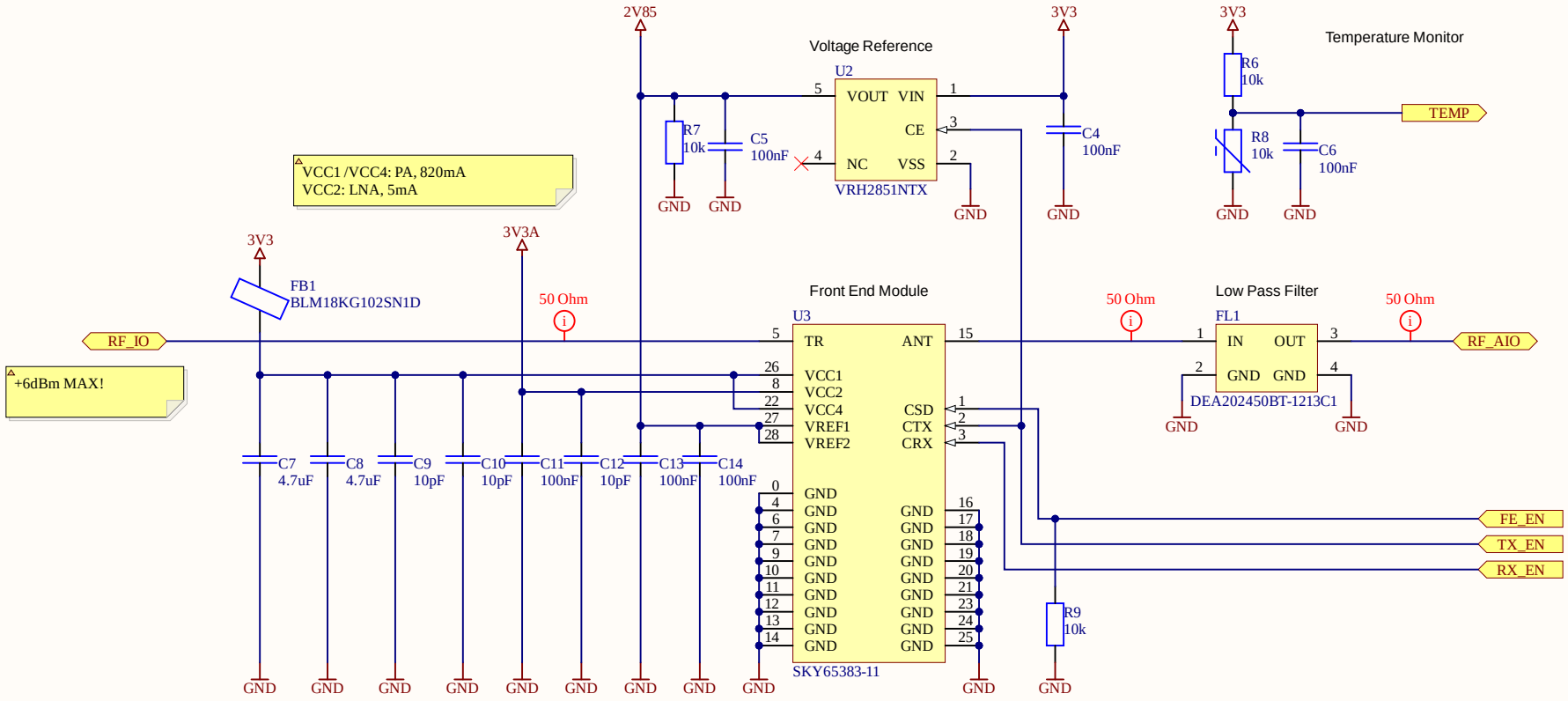

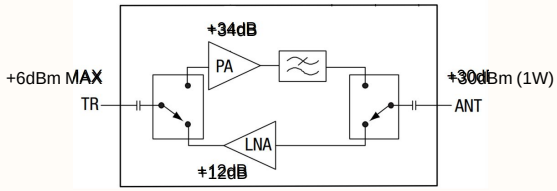

Operating Mode	CSD (Pin 1)	CTX (Pin 2)	CRX (Pin 3)
All off (sleep mode)[2]	0	0	0
Receive[2]	1	0	1
Transmit	1	1	0

Title **CATS Vega**

Subtitle **Front End**

CATS

Author: *Luca Jost* | Date: 15/12/2022 | Rev: V1.0

File: CATS-Vega-Frontend.SchDoc | Sheet 15 of 16

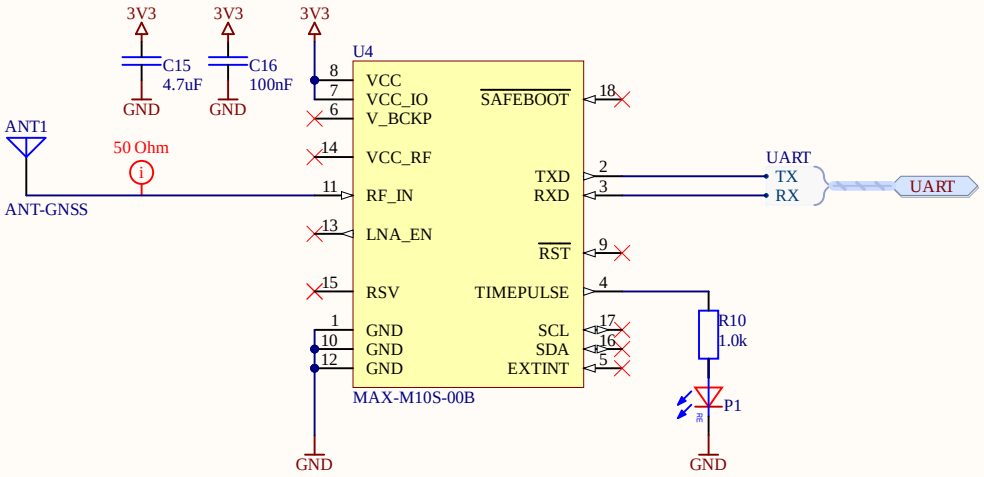

Title **CATS Vega**

Subtitle **GNSS**

CATS

Author: *Luca Jost*	Date: 15/12/2022	Rev: V1.0
File: CATS-Vega-GNSS.SchDoc		Sheet 16of 16