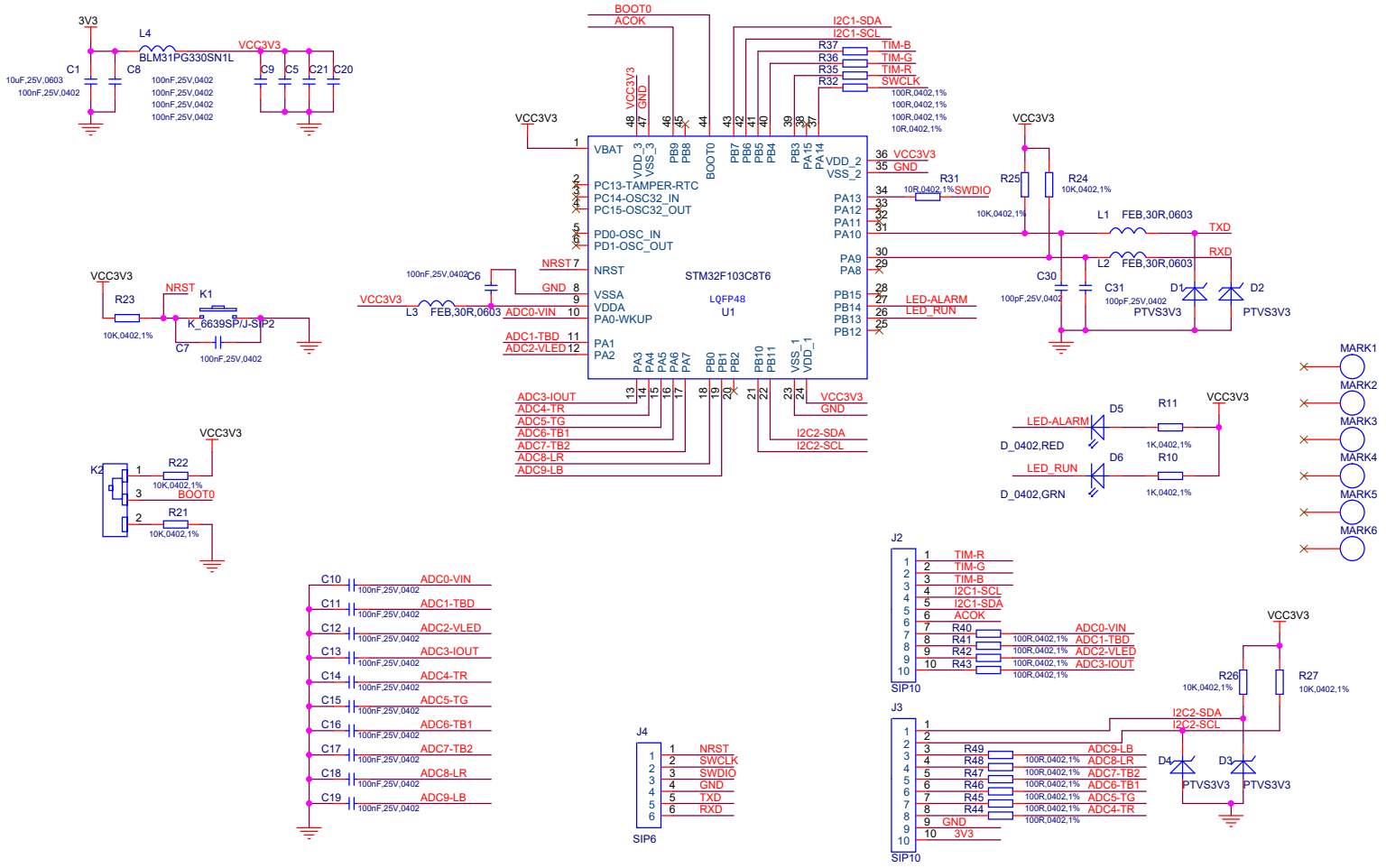

Title	LEDDRV		
Size A3	Document Number EVT-LEDSTM32-V1		Rev V1
Date: Tuesday, July 23, 2019		Sheet 1 of 1	