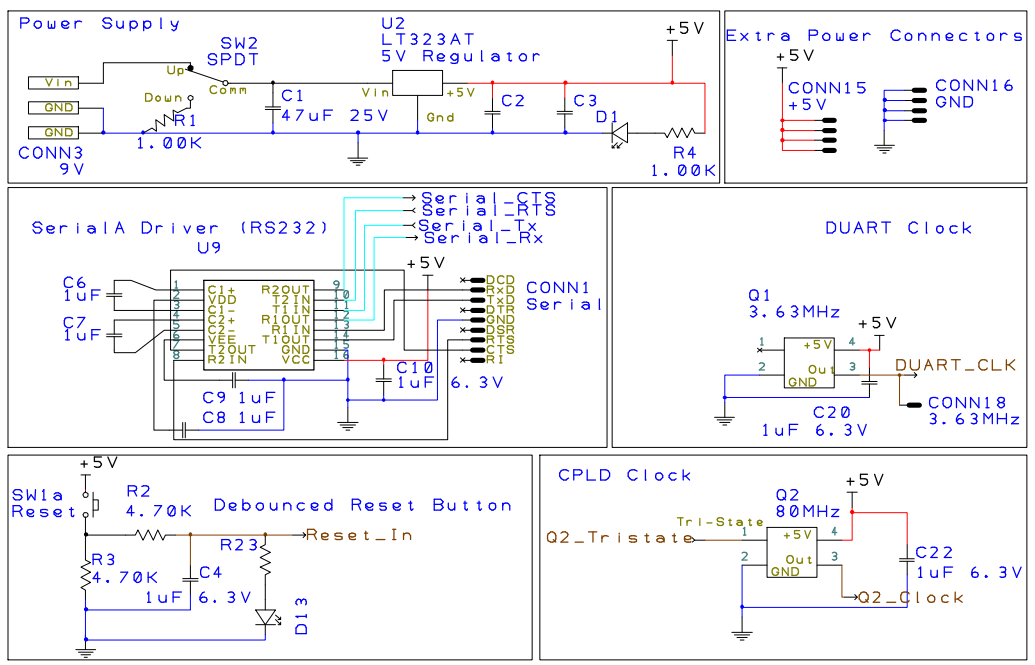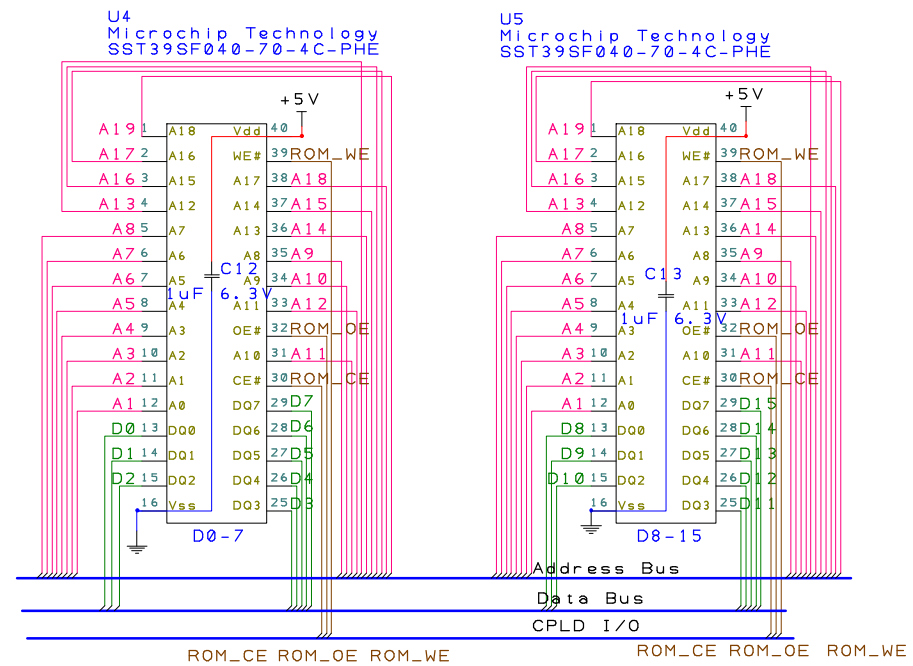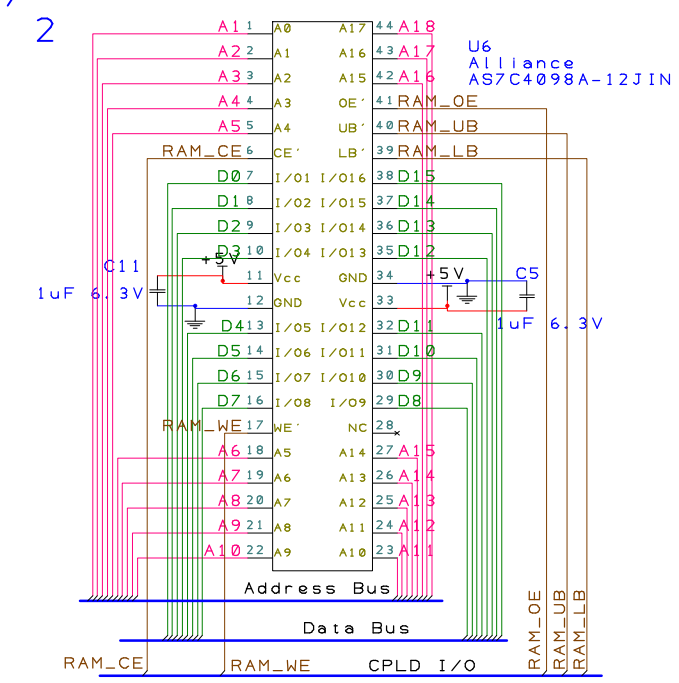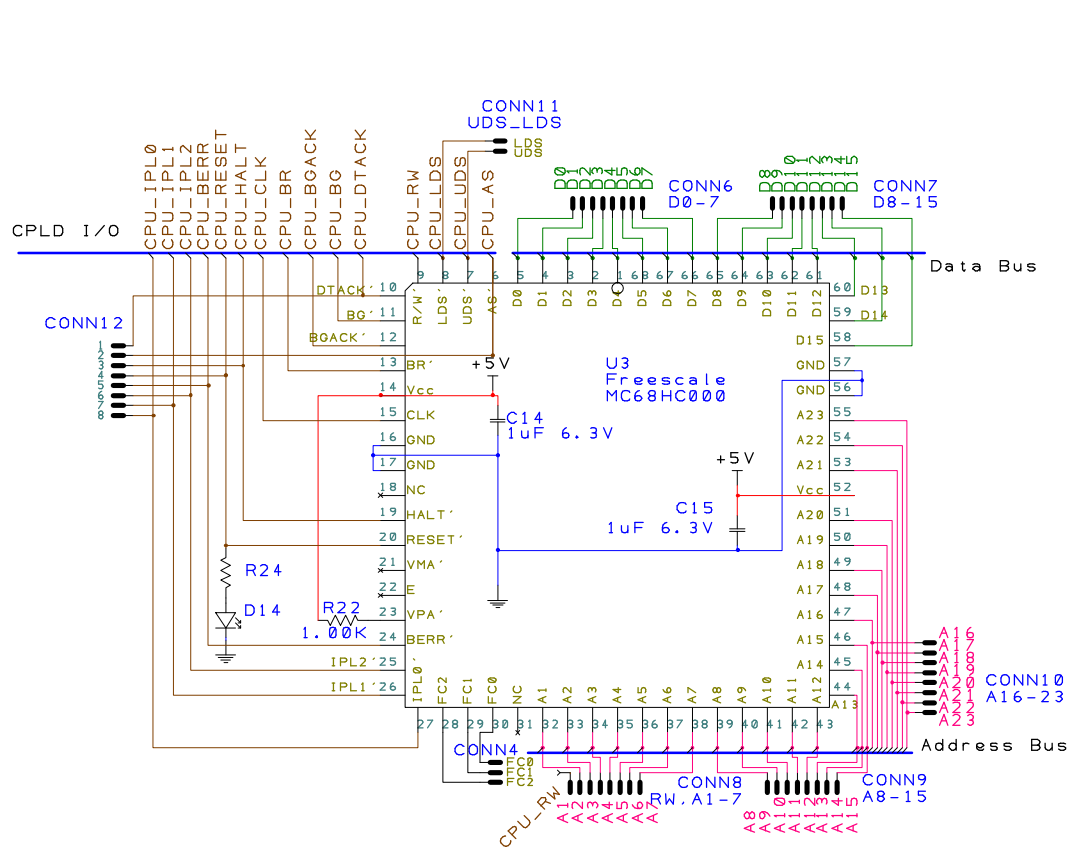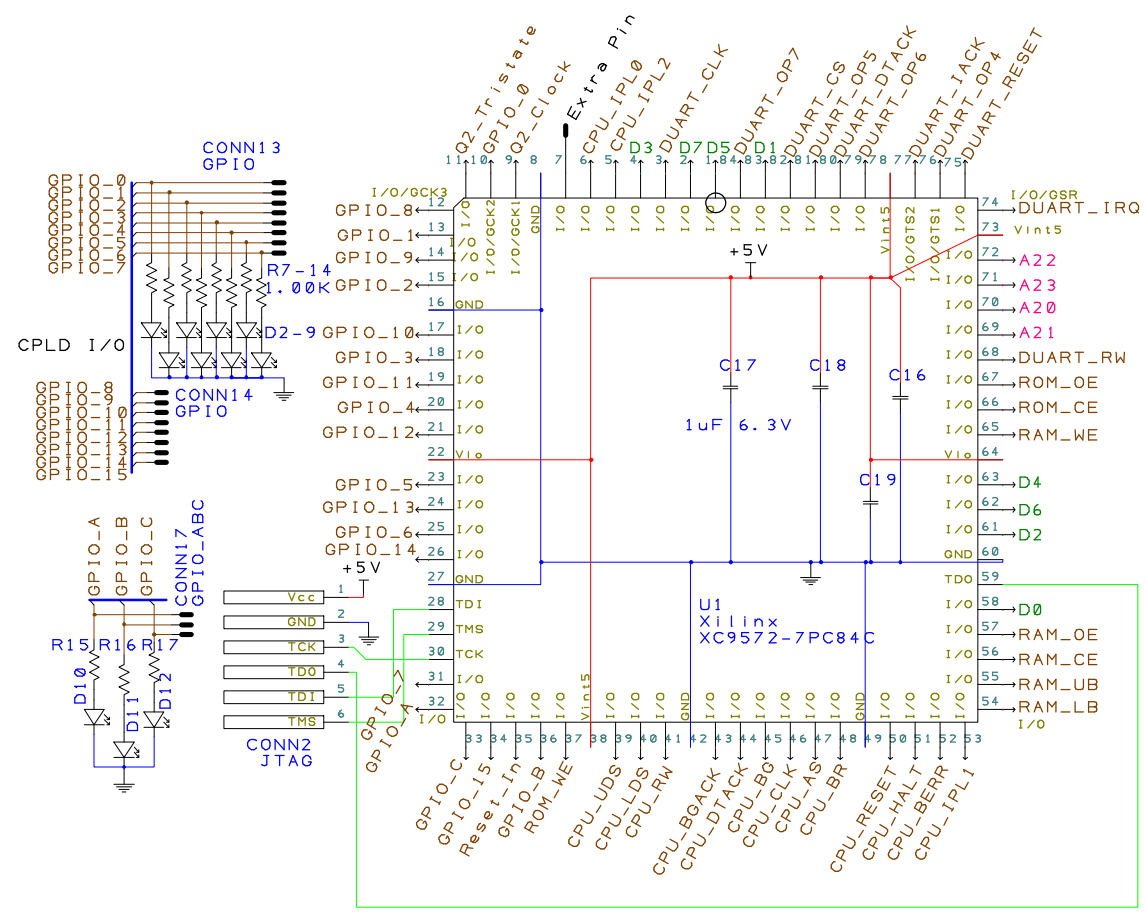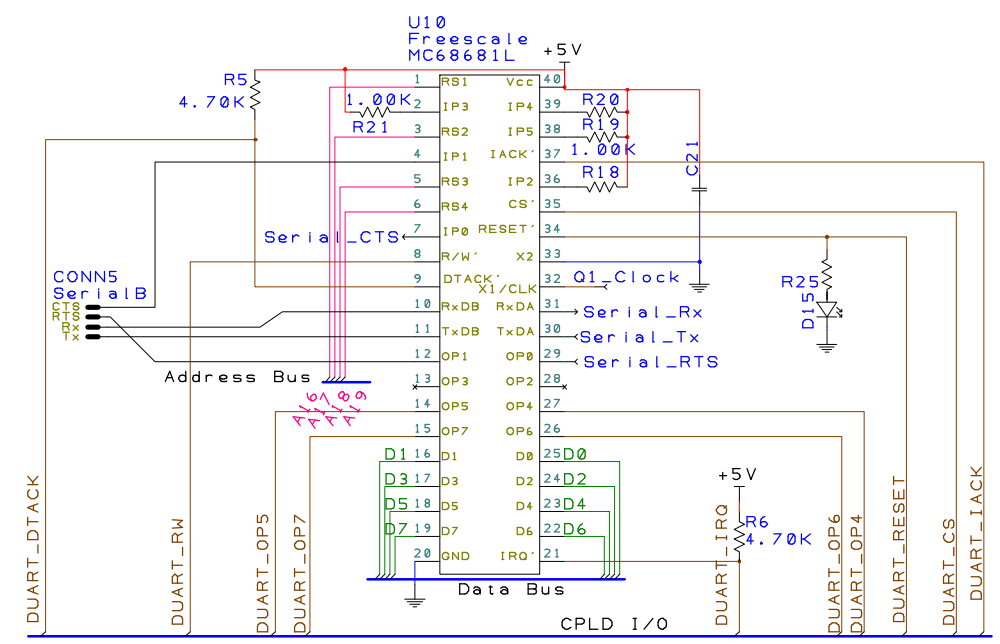Chandler Griscom
M68000 Computer Schematic
Microcomputer Design
07Feb2017
Revision 2