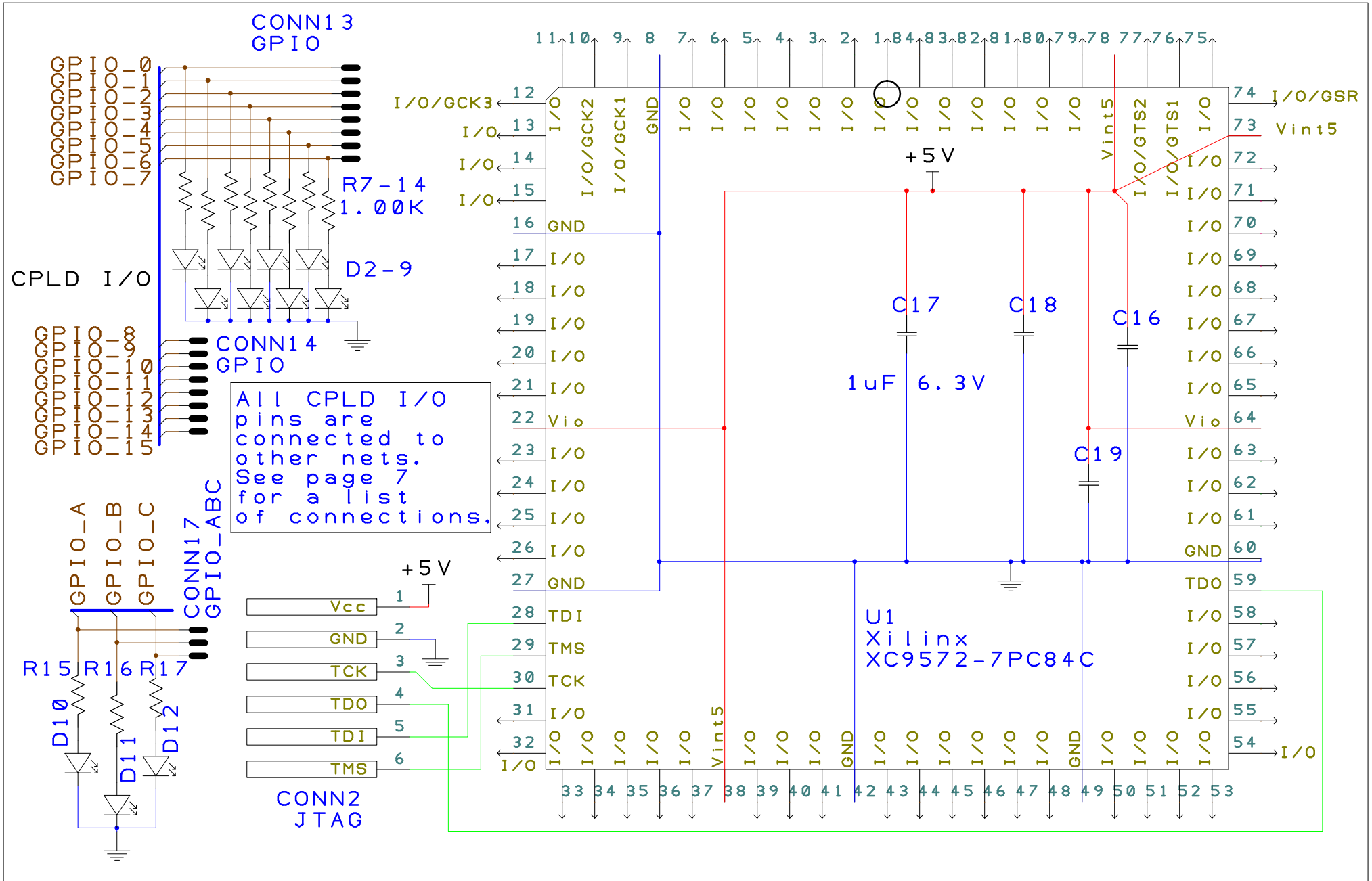

E	D	C	B	A	Drawn CJG 31Jan2017	Check	Projection Do Not Scale	
Drn	Drn	Drn	Drn		Project Microcomputer Design		Client LeTourneau University	
Chk	Chk	Chk	Chk		Title Chandler Griscom M68000 Computer Schematic		Filename CJG_Microcomputer.sch	Drawing No. 1	Sheet 5 of 7