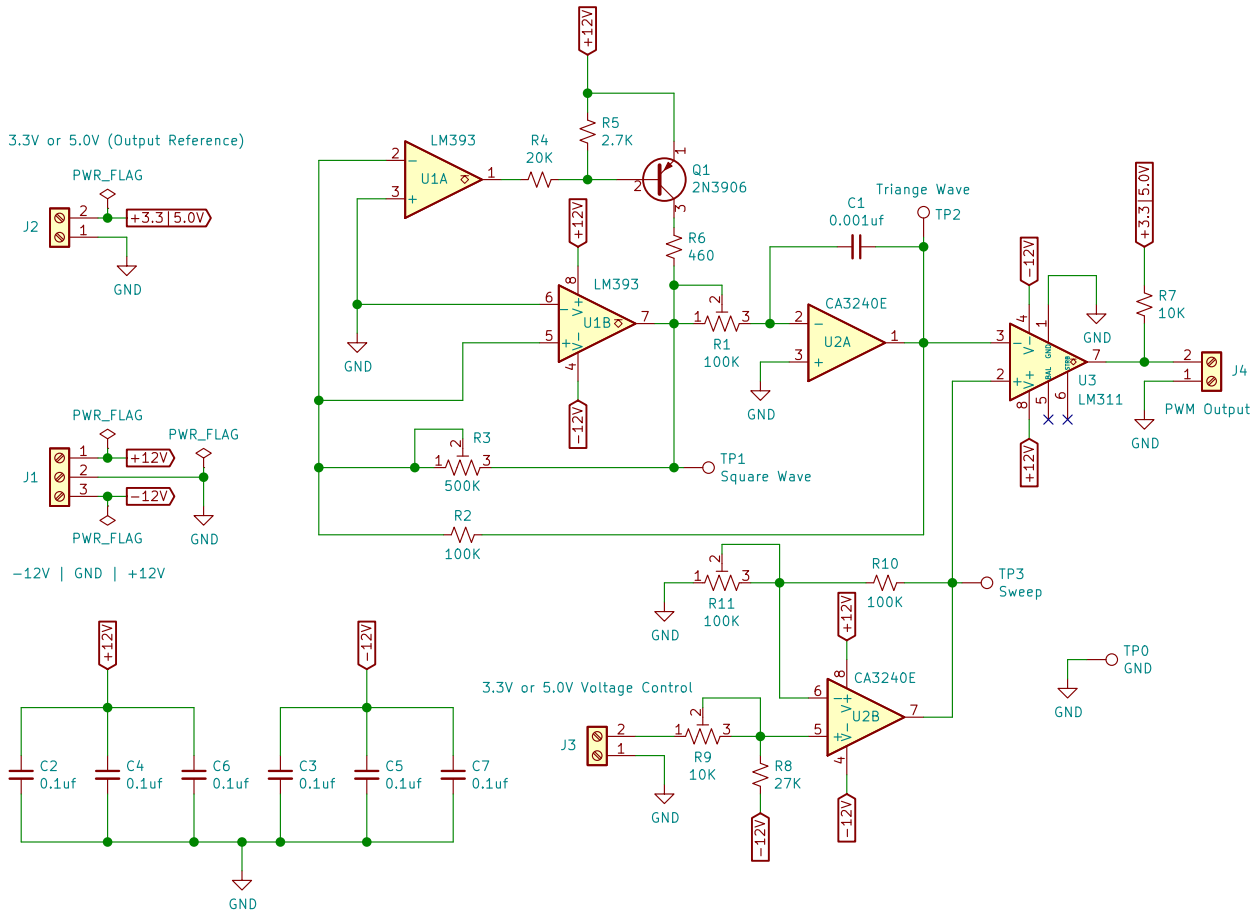

TetraSys

Sheet: /

File: VoltageControlledPWM.sch

Title: Voltage Controlled PWM

Size: USLetter	Date: 2021-07-20	**Rev: V1.0**
KiCad E.D.A. kicad 5.1.10-88a1d61d5890ubuntu20.04.1		Id: 1/1