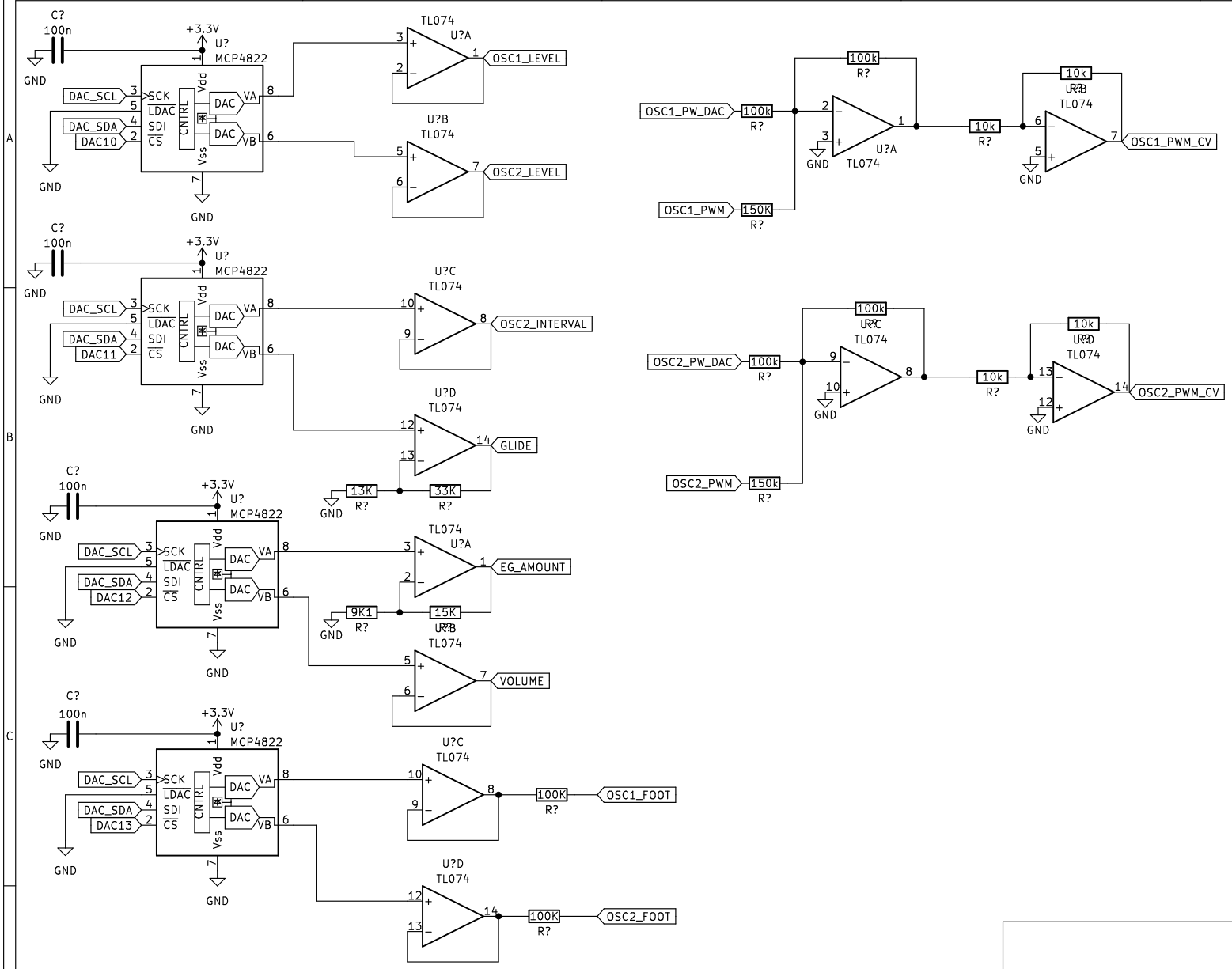

Craig Barnes

Sheet: /

File: DACs2.kicad_sch

Title: Programmer 2

Size: A4	Date: 2022-09-22	**Rev: 1**
KiCad E.D.A. kicad (6.0.11)		Id: 1/1