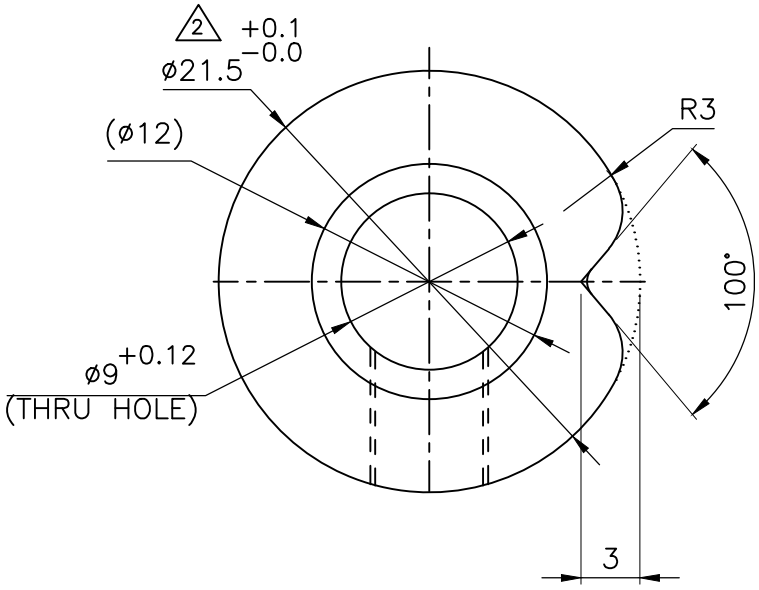

TOP VIEW

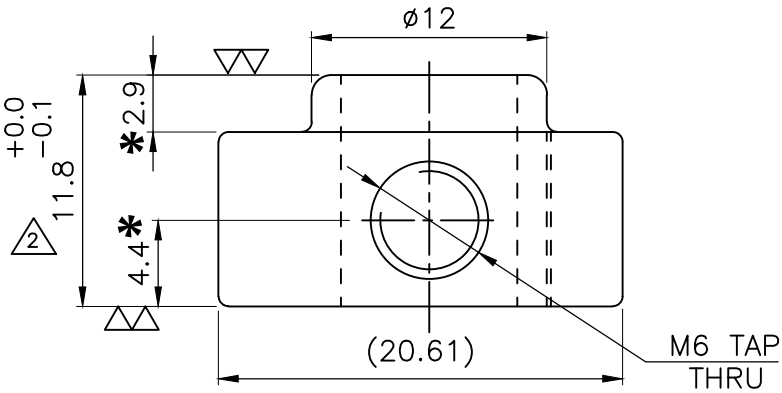

FRONT VIEW

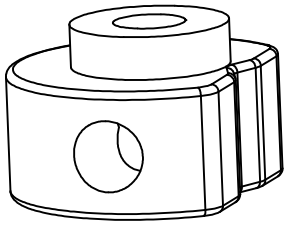

ISOMETRIC

NOTE:–

1. ALL DIMENSIONS ARE IN mm.
2. REMOVE ALL SHARP CORNERS & EDGES.
3. DIMENSIONS GIVEN IN ( ) ARE ONLY FOR REFERENCE.
4. ✱CRITICAL DIMENSIONS SHOULD BE MAINTAINED AS PER DRAWING.
5. ASK US IF ANY DOUBT. DO NOT ASSUME.

ERN NO	REV NO	DATE	MODIFICATION	DRAWN	APPD
99	2	16.01.2018	TOLERANCE CHANGE FROM DIA 21.5 DIMENSION CHANGE FROM 12 TO 11.8.	VBK	BRT
01	1	13.06.2016	COUNTER DIAMETER & DEGREE DIMENSION CHANGE.	VBK	VBK

	SIGN	DATE
DRAWN	VBK	13.08.2015
CHECKED	VBK	13.06.2016
APPD.	BRT	14.06.2016
SCALE : 1:1	SHEET : 1OF1	
WEIGHT (KG) :–		

MATERIAL:– SS316

PROJ.

TITLE:– MTLS COUNTER – 1&2

REV. 02

PETROSAFE SAFETY SYSTEMS
(DIVISION OF PETROMECH ENGG. PVT. LTD.)
OFFICE NO.-606, 6th FLOOR, SOUTH BLOCK, SACRED WORLD, WANOWARI, PUNE

DRG.NO. MTLS–023–MD–02

M/cg Deviation for open Dimns. (Med. to IS: 2102)

Dims. Over	Upto & Inc.	Tolerance
-	6	±0.1
6	30	±0.2
30	120	±0.3
120	315	±0.5
315	1000	±0.8
1000	2000	±1.2
2000	4000	±2.0
>4000		±3.0

Surface Roughness Symbols

For other Roughness Symbols & Values See IS:3073 (TS:11507)

"PEPL COPYRIGHT" NO PART OF THIS DRAWING MAY BE REPRODUCED IN ANY FORM WITHOUT WRITTEN PERMISSION OF COPY RIGHT OWNER.