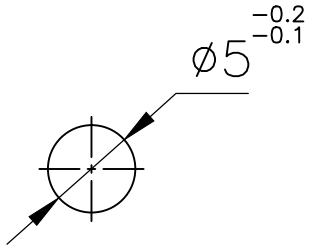

TOP VIEW

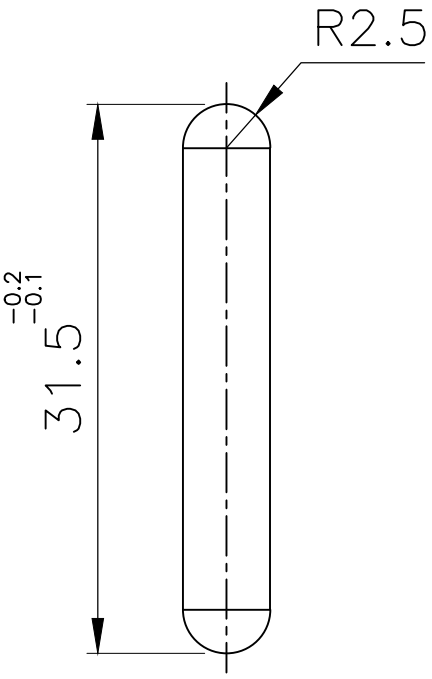

FRONT VIEW

NOTE:–

1. ALL DIMENSIONS ARE IN mm.
2. REMOVE ALL SHARP CORNERS & EDGES.
3. DIMENSIONS GIVEN IN ( ) ARE ONLY FOR REFERENCE.
4. * CRITICAL DIMENSIONS SHOULD BE MAINTAINED AS PER DRAWING.
5. ASK US IF ANY DOUBT. DO NOT ASSUME.

–	△	–	NEW RELEASE	–	–
ERN NO	REV NO	DATE	MODIFICATION	DRAWN	APPD
	SIGN	DATE	MATERIAL:– SS316	PROJ.	
DRAWN	VBK	5.02.2014			
CHECKED			TITLE:– DCM SOLID PIN–A	REV. 00	
APPD.					
SCALE : 1:1	SHEET : 10F1				
WEIGHT (KG) :–					

PETROSAFE SAFETY SYSTEMS
(DIVISION OF PETROMECH ENGG. PVT. LTD.)
OFFICE NO.-606, 6th FLOOR, SOUTH BLOCK, SACRED WORLD, WANOWARI, PUNE

DRG.NO. DCM–009–MD–00

M/cg Deviation for open Dimns. (Med. to IS: 2102)

Tolerance	Dims. Upto & Inc.	Over
±0.1	6	-
±0.2	30	6
±0.3	120	30
±0.5	315	120
±0.8	1000	315
±1.2	2000	1000
±2.0	4000	2000
±3.0	>4000	

Surface Roughness Symbols

New	Old
N12/	~
N11/	▽
N9/	▽▽
N6/	▽▽▽
N3/	▽▽▽▽
N6/ HRD	▽
N6/ HRD & GRD	▽

For other Roughness Symbols & Values See IS:3073 (TS:11507)

"PEPL COPYRIGHT" NO PART OF THIS DRAWING MAY BE REPRODUCED IN ANY FORM WITHOUT WRITTEN PERMISSION OF COPY RIGHT OWNER.