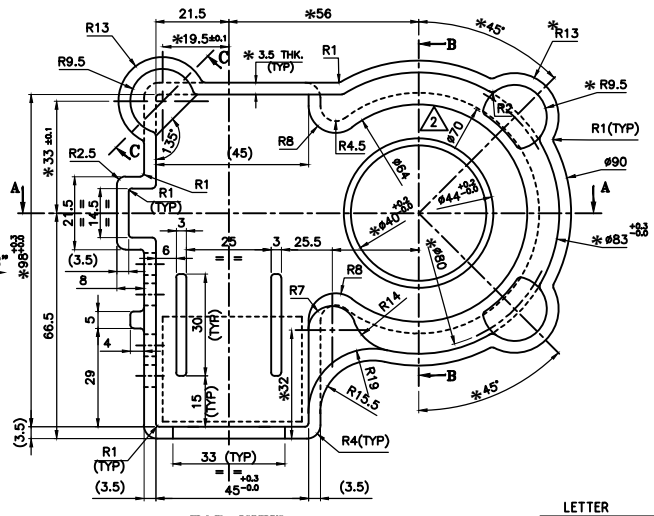

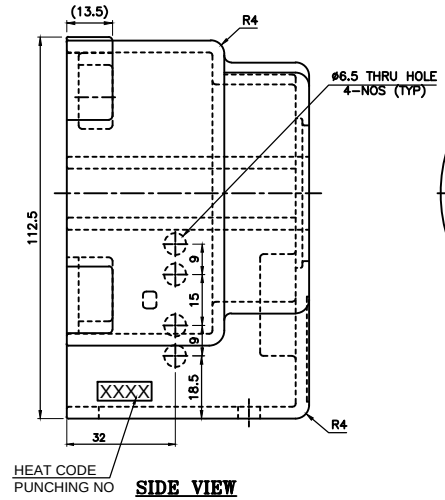

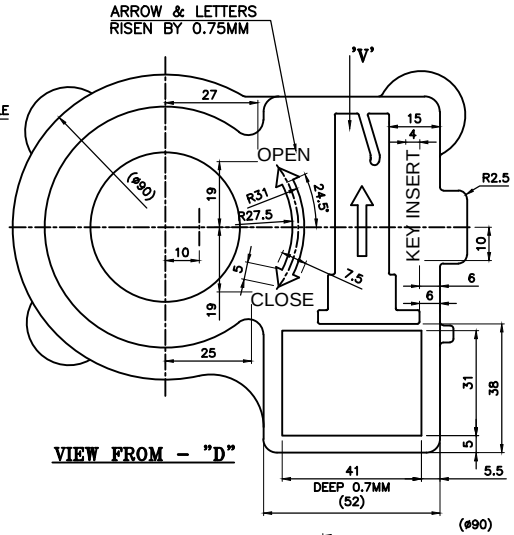

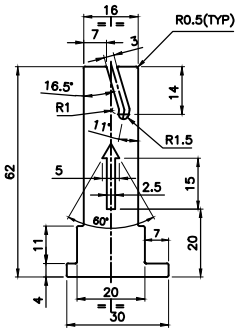

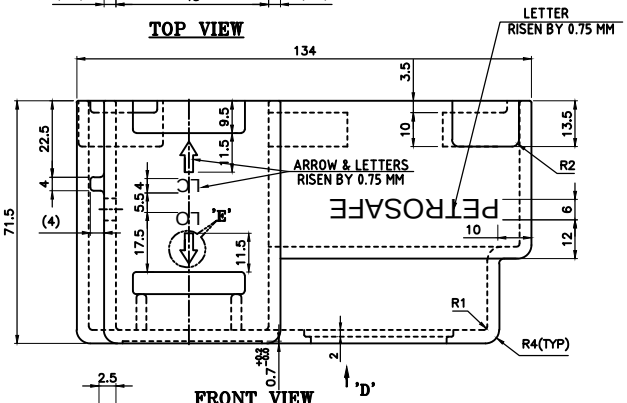

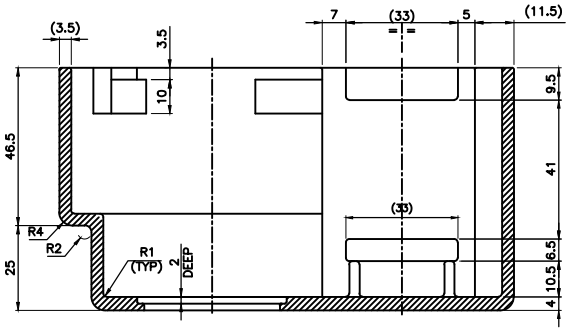

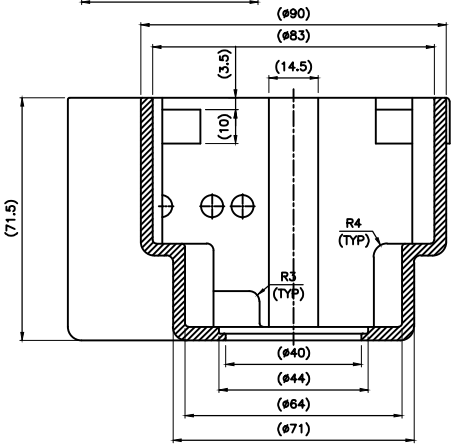

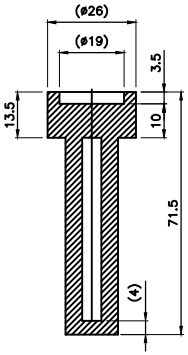

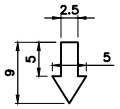

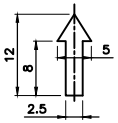

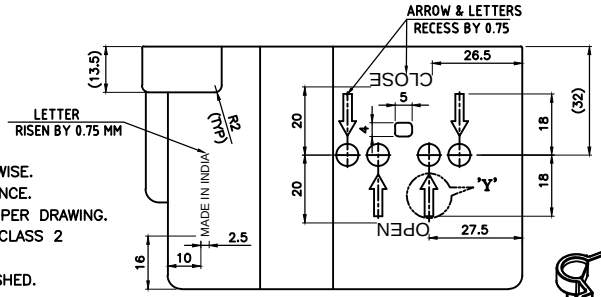

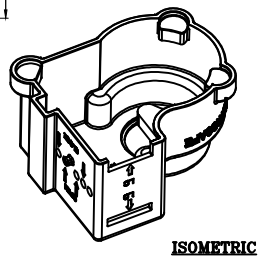

NOTE:–

1. ALL DIMENSIONS ARE IN mm.
2. REMOVE ALL SHARP CORNERS & EDGES.
3. ALL RADII R0.5 (MAX) UNLESS MENTIONED OTHERWISE.
4. DIMENSIONS GIVEN IN ( ) ARE ONLY FOR REFERENCE.
5. * CRITICAL DIMENSIONS SHOULD BE MAINTAINED AS PER DRAWING.
6. UNSPECIFIED TOLERANCE AS PER IS:11166:1993, CLASS 2
7. CASTING REPAIR BY WELDING IS NOT ALLOWED.
8. CASTING SHOULD BE BRIGHT FINISH ELECTROPOLISHED.
9. ALL LETTERS FONT STYLE IS ARIAL.
10. ASK US IF ANY DOUBT. DO NOT ASSUME.

Casting Deviation for open Dimensions. (IS: 11166)

Dims.								
Over	-	6	10	18	30	80	180	300
Upto & Inc.	6	10	18	30	80	180	300	500
Tolerance	±0.10	±0.12	±0.20	±0.30	±0.45	±0.60	±1.00	±2.00

© "PEPL COPYRIGHT" NO PART OF THIS DRAWING MAY BE REPRODUCED IN ANY FORM WITHOUT WRITTEN PERMISSION OF COPY RIGHT OWNER.

ERN NO	REV NO	DATE	MODIFICATION	DRAWN	APPD
56	2	27.07.2017	CHANGED ø68 TO ø70 (INSIDE LUG)	SRP	RRS
02A	1	27.03.2017	DIMENSION 23.5 CHANGED TO 22.5	SRP	ASG
02	00	14.02.2017	NEW RELEASE	SRP	ASG

	SIGN	DATE
DRAWN	SRP	14.02.2017
CHECKED	VBK	14.02.2017
APPD.	ASG	14.02.2017

SCALE : 1:1 SHEET : 10F1

WEIGHT (KG) :–1.0 kg

MATERIAL:– ASTM A351 Gr. CF8M

PROJ.

TITLE:– MTLS COVERING BOX

REV. 02

PETROSAFE SAFETY SYSTEMS
(DIVISION OF PETROMECH ENGG. PVT. LTD.)
OFFICE NO.-606, 6th FLOOR, SOUTH BLOCK, SACRED WORLD, WANOWARI, PUNE

DRG.NO. MTLS–002A–CD–02