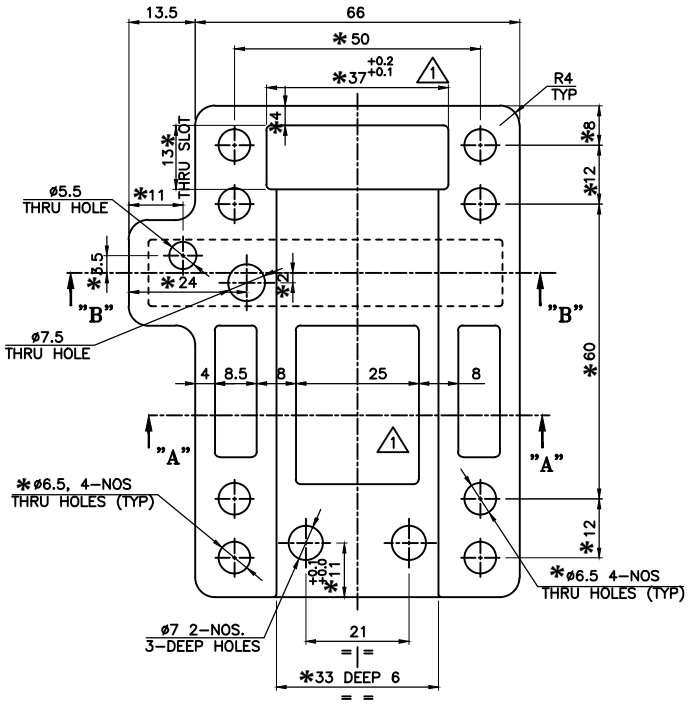

VIEW FROM-F

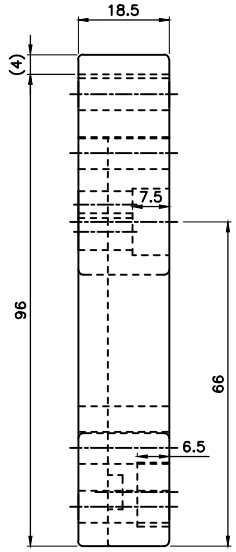

SIDE VIEW

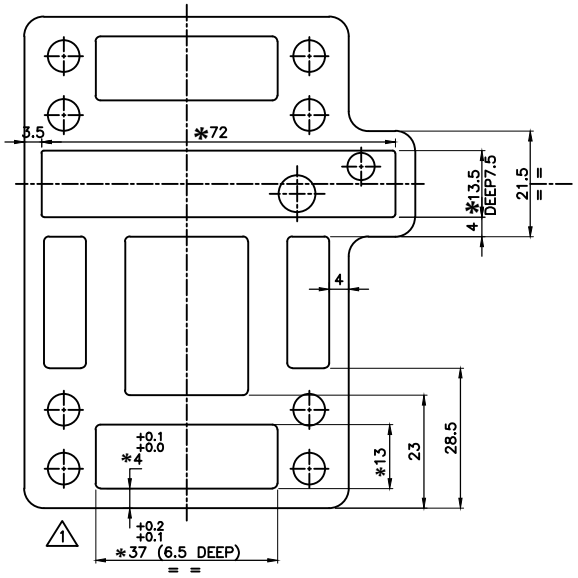

VIEW FROM-E

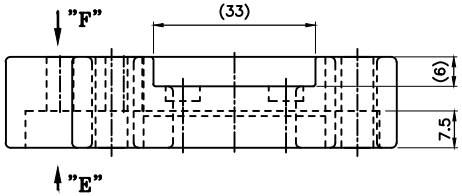

FRONT VIEW

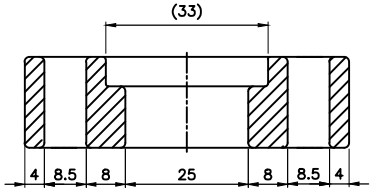

DETAIL-A

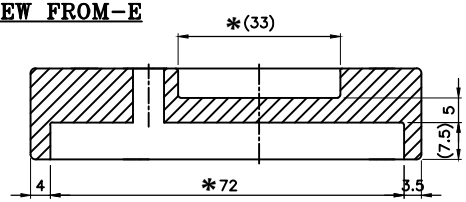

DETAIL-B

NOTE:-

1. ALL DIMENSIONS ARE IN mm.
2. REMOVE ALL SHARP CORNERS & EDGES.
3. ALL RADII R0.5 (MAX) UNLESS MENTIONED OTHERWISE.
4. DIMENSIONS GIVEN IN ( ) ARE ONLY FOR REFERENCE.
5. * CRITICAL DIMENSIONS SHOULD BE MAINTAINED AS PER DRAWING.
6. UNSPECIFIED TOLERANCE AS PER IS:11166:1993, CLASS 2
7. CASTING REPAIR BY WELDING IS NOT ALLOWED.
8. CASTING SHOULD BE BRIGHT FINISH ELECTROPOLISHED.
9. ASK US IF ANY DOUBT. DO NOT ASSUME.
10. GLOSS FINISH IS TO BE ACHIEVED

Casting Deviation for open Dimensions. (IS: 11166)

Dims.	Over	-	6	10	18	30	80	180	300
	Upto & Inc.	6	10	18	30	80	180	300	500
	Tolerance	±0.10	±0.12	±0.20	±0.30	±0.45	±0.60	±1.00	±2.00

"PEPL COPYRIGHT" NO PART OF THIS DRAWING MAY BE REPRODUCED IN ANY FORM WITHOUT WRITTEN PERMISSION OF COPY RIGHT OWNER.

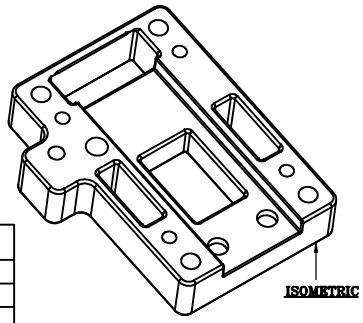

ISOMETRIC

ERN NO	REV NO	DATE	MODIFICATION	DRAWN	APPD
02	2	19.01.2017	SHEET UPDATED	SRP	ASG
01	1	07.10.16	1) WEATHER STRIP SLOT ADDED 2) COUNTER HOLES FOR WEATHER STRIP ADDED 3) SLOT LENGTH REDUCED 4) BLIND SLOT TO BE ADDED FOR WEATHER STRIP	SRP	BRT

	SIGN	DATE
DRAWN	SRP	07.10.2016
CHECKED		
APPD.		

SCALE : 1:1 SHEET : 1OF1

WEIGHT (KG) :-

MATERIAL:- ASTM A351 Gr. CF8M

PROJ.

TITLE:- CASING MIDDLE DCM/DCS/KEU/DBL

REV. 02

PETROSAFE SAFETY SYSTEMS
(DIVISION OF PETROMECH ENGG. PVT. LTD.)
OFFICE NO.-606, 6th FLOOR, SOUTH BLOCK, SACRED WORLD, WANOWARI, PUNE

DRG.NO. DCM-002-CD-02