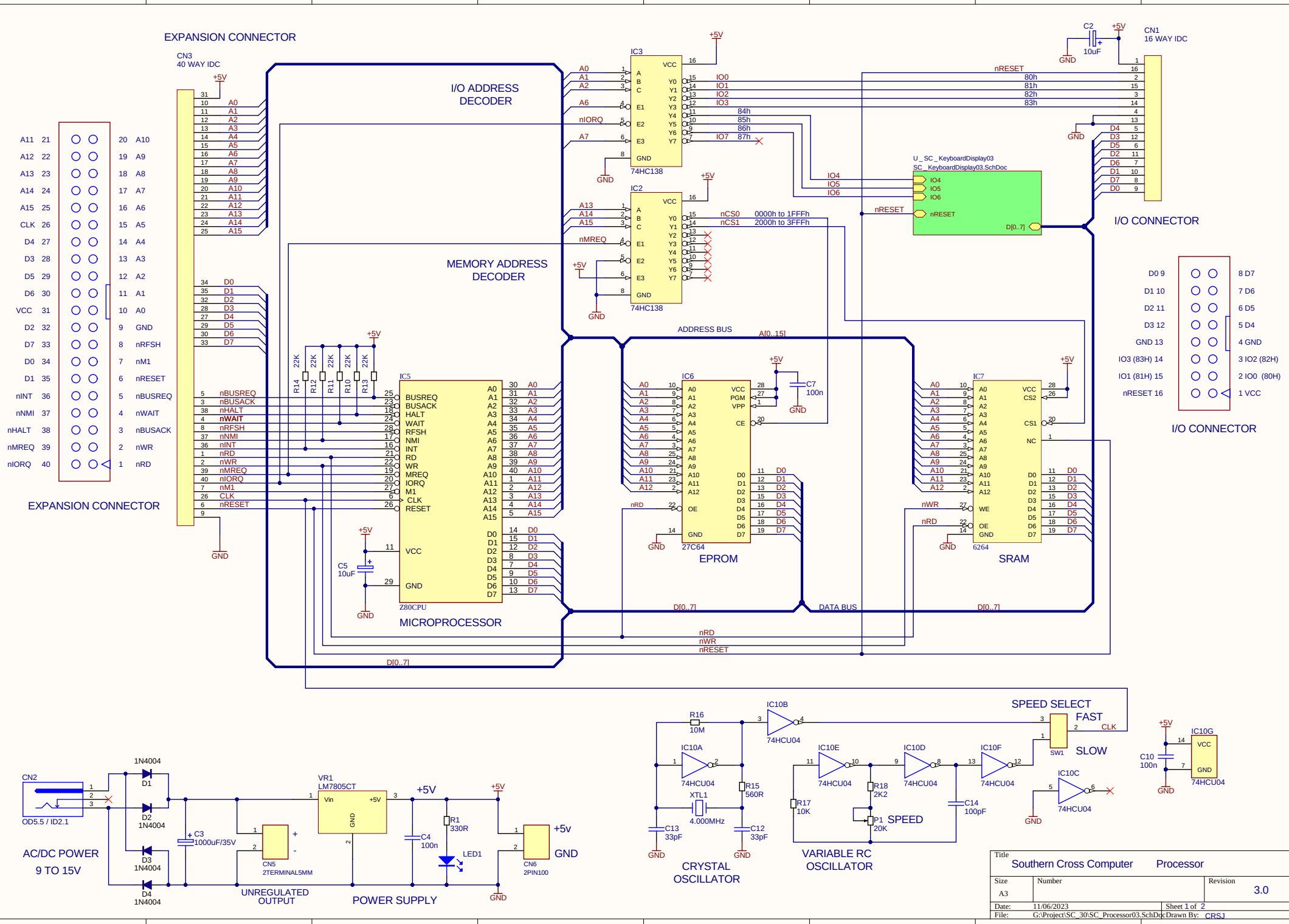
EXPANSION CONNECTOR
CN3
40 WAY IDC
I/O ADDRESS DECODER
MEMORY ADDRESS DECODER
IC3
74HC138
IC2
74HC138
CN1
16 WAY IDC
C2
10uF
I/O CONNECTOR
U_SC_KeyboardDisplay03
SC_KeyboardDisplay03.SchDoc
ADDRESS BUS
A[0..15]
IC5
Z80CPU
MICROPROCESSOR
IC6
27C64
EPROM
IC7
6264
SRAM
DATA BUS
D[0..7]
C5
10uF
C7
100n
EXPANSION CONNECTOR
I/O CONNECTOR
CN2
OD5.5 / ID2.1
AC/DC POWER
9 TO 15V
1N4004
D1
D2
D3
D4
C3
1000uF/35V
CN5
2TERMINAL5MM
UNREGULATED OUTPUT
VR1
LM7805CT
C4
100n
R1
330R
LED1
CN6
2PIN100
POWER SUPPLY
R16
10M
IC10B
74HCU04
IC10A
74HCU04
R15
560R
XTL1
4.000MHz
C13
33pF
C12
33pF
CRYSTAL OSCILLATOR
IC10E
74HCU04
IC10D
74HCU04
IC10F
74HCU04
R17
10K
R18
2K2
P1
20K
SPEED
C14
100pF
VARIABLE RC OSCILLATOR
SPEED SELECT
FAST
SLOW
SW1
IC10C
74HCU04
IC10G
74HCU04
C10
100n
Title
Southern Cross Computer Processor
Size
A3
Number
Revision
3.0
Date: 11/06/2023
Sheet 1 of 2
File: G:\Project\SC_30\SC_Processor03.SchDoc
Drawn By: CRSJ

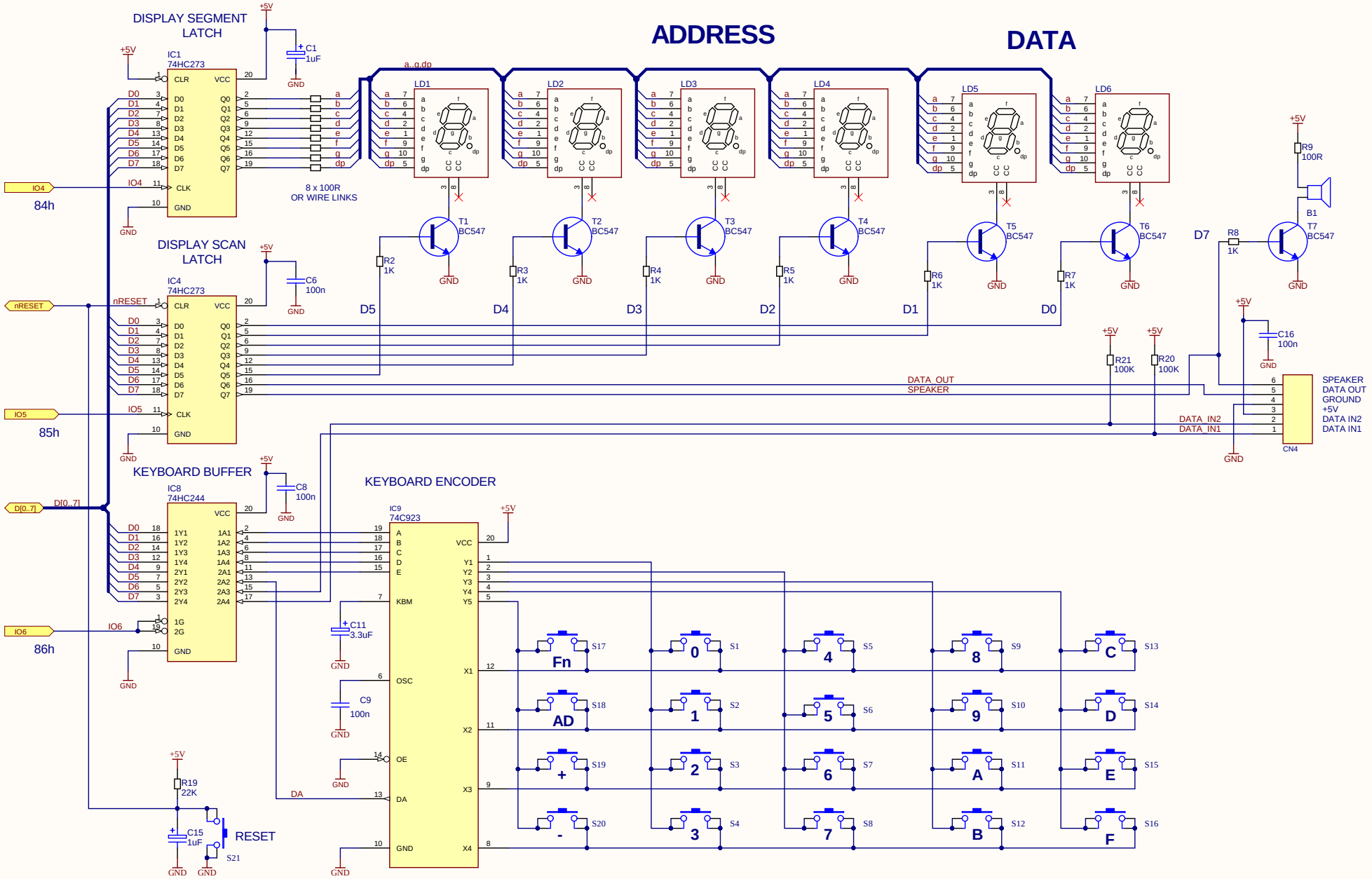

Title	Southern Cross Computer — Keyboard and Display	
Size: A3	Number	Revision: 3.0
Date: 11/06/2023	Sheet 2 of 2	
File: G:\Project\..\SC_KeyboardDisplay03.SchDoc	Drawn By: CRSJ	

Designator	Comment	Quantity
B1	MINI SPEAKER 6.35mm (0.25") pitch	1
C1, C15	1uF Electrolytic Capacitor	2
C2, C5	10uF Electrolytic Capacitor	2
C3	1000uF/35V Electrolytic Capacitor	1
C4, C6, C7, C8, C9, C10, C16	100n Monolithic Ceramic Capacitor	7
C11	3.3uF Electrolytic Capacitor	1
C12, C13	33pF Ceramic Capacitor	2
C14	100pF Ceramic Capacitor	1
CN1	16 WAY IDC Straight or R/A	1
CN2	OD5.5 / ID2.1 POWER JACK	1
CN3	40 WAY IDC Straight or R/A	1
CN4	SIL6 6 Way Connector 2.54mm (0.1") pitch	1
CN5	2 TERMINAL 5MM Terminal Block	1
CN6	2PIN100 2 way connector 2.54mm (0.1") pitch	1
D1, D2, D3, D4	1N4004 Diode	4
IC1, IC4	74HC273	2
IC2, IC3	74HC138	2
IC5	Z80CPU	1
IC6	27C64 8k x 8 CMOS EPROM	1
IC7	6264 8k x 8 SRAM	1
IC8	74HC244	1
IC9	74C923	1
IC10	74HCU04	1
LD1, LD2, LD3, LD4, LD5, LD6	FND500/560 or CM1-5615S 7 Segment LED	6
LED1	5mm RED LED	1
P1	20K Trimpot	1
R1	330R	1
R2, R3, R4, R5, R6, R7, R8	1K	7
R9	100R	1
R10, R11, R12, R13, R14, R19	22K	6
R15	560R	1
R16	10M	1
R17	10K	1
R18	2K2	1
R20, R21	100K	2
S1, S2, S3, S4, S5, S6, S7, S8, S9, S10, S11, S12, S13, S14, S15, S16, S17, S18, S19, S20, S21	PUSHBUTTON	21
SIL1, SIL2	4 INDIVIDUAL RESISTORS 100R	2
SW1	SPDT SWITCH 2.54mm (0.1") pitch	1
T1, T2, T3, T4, T5, T6, T7	BC547	7
VR1	LM7805CT	1
XTL1	4.000MHz	1
HS1	TO-220 Heatsink	1

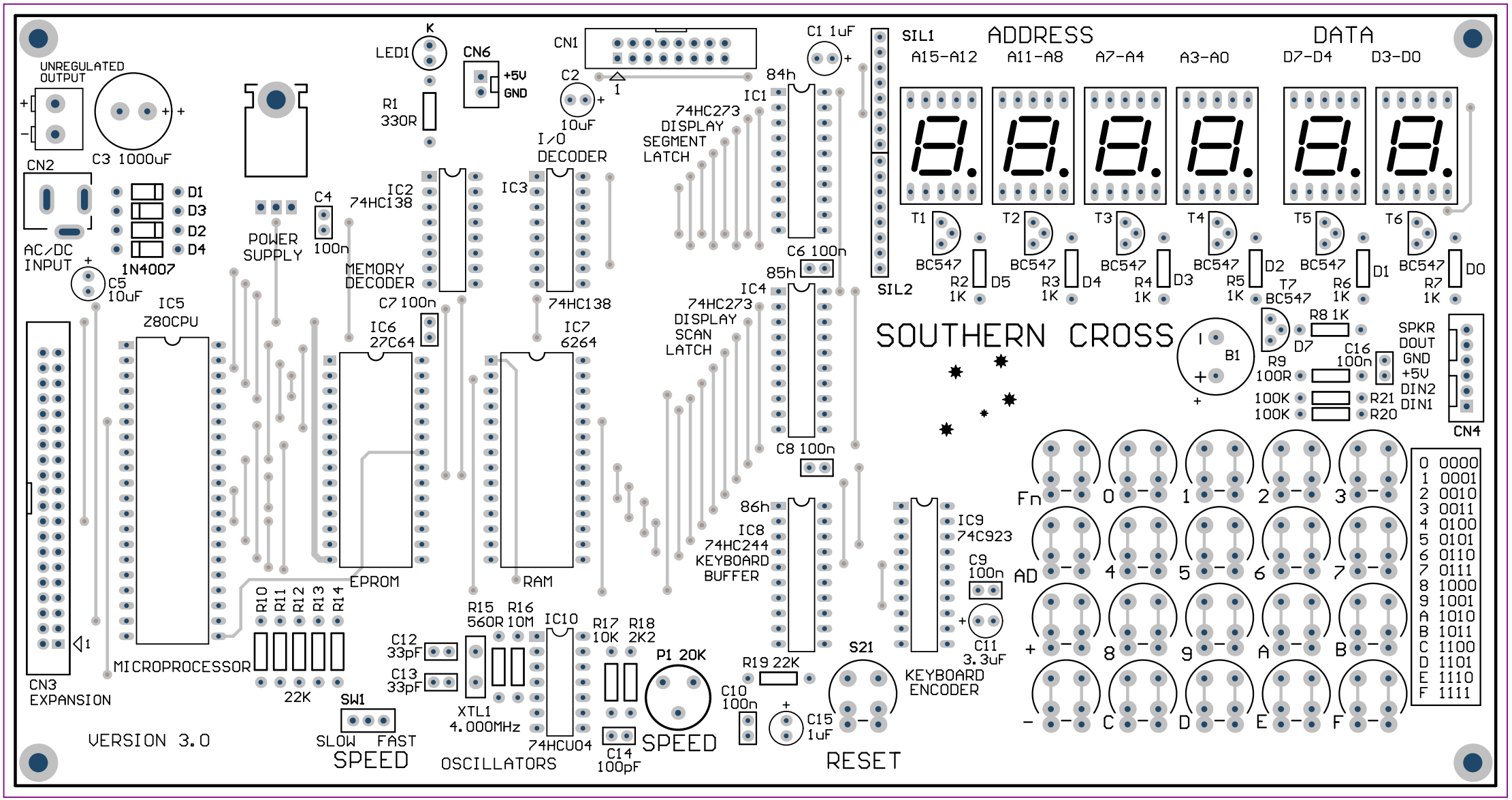
UNREGULATED OUTPUT
C3 1000uF
CN2
AC/DC INPUT
1N4007
D1
D3
D2
D4
C5 10uF
POWER SUPPLY
C4 100n
LED1
K
R1 330R
CN6
+5V
GND
CN1
C2 10uF
I/O DECODER
IC3
74HC138
IC2
74HC138
MEMORY DECODER
C7 100n
IC6 27C64
EPROM
IC7 6264
RAM
IC5 Z80CPU
MICROPROCESSOR
CN3 EXPANSION
R10 R11 R12 R13 R14
22K
SW1
SLOW FAST
SPEED
R15 560R
R16 10M
C12 33pF
C13 33pF
XTL1 4.000MHz
IC10
74HCU04
R17 10K
R18 2K2
P1 20K
C14 100pF
SPEED
OSCILLATORS
C1 1uF
84h
IC1
74HC273
DISPLAY SEGMENT LATCH
C6 100n
85h
IC4
74HC273
DISPLAY SCAN LATCH
C8 100n
86h
IC8
74HC244
KEYBOARD BUFFER
R19 22K
C10 100n
C15 1uF
RESET
S21
KEYBOARD ENCODER
IC9
74C923
C9 100n
C11 3.3uF
SIL2
SIL1
ADDRESS
A15-A12
A11-A8
A7-A4
A3-A0
DATA
D7-D4
D3-D0
T1 BC547 R2 1K D5
T2 BC547 R3 1K D4
T3 BC547 R4 1K D3
T4 BC547 R5 1K D2
T5 BC547 R6 1K D1
T6 BC547 R7 1K D0
T7 BC547 R8 1K D7
SOUTHERN CROSS
B1
R9 100R
C16 100n
100K
100K
R21
R20
SPKR
DOUT
GND
+5V
DIN2
DIN1
CN4
Fn 0 1 2 3
AD 4 5 6 7
+ 8 9 A B
- C D E F
0 0000
1 0001
2 0010
3 0011
4 0100
5 0101
6 0110
7 0111
8 1000
9 1001
A 1010
B 1011
C 1100
D 1101
E 1110
F 1111
VERSION 3.0

Comment	Description	Designator	Footprint	LibRef	Quantity
DATA BUS CONNECTOR				DATA BUS CONNECTOR	1
		B1	MINISPK	SPEAKER	1
1uF		C1, C15	ELCAP100	ELCAP1UF	2
10uF		C2, C5	ELCAP100	ELCAP10UF	2
1000uF		C3	ELCAP1MF	ELCAP	1
100n		C4, C6, C7, C8, C10, C16	RAD0.1	CC100N	6
33pF		C12, C13	RAD0.1	CC33PF	2
100pF		C14	RAD0.1	CC100PF	1
16 WAY IDC		CN1	IDC16P	IDC16	1
SOCKET		CN2	DJ25P	DCJACK	1
40 WAY IDC		CN3	IDC40P	IDC40	1
SIL6		CN4		SIL6	1
TBLOCK		CN5	EDGECON	TBLOCK	1
TBLOCK		CN6	MOLEX2	TBLOCK	1
1N4004		D1, D2, D3, D4	DIODE0.4	DIODE	4
1N4148		D?	DIODE0.4	DIODE	4
74HC273		IC1, IC4	DIP20	74HC273N	2
74HC138		IC2, IC3	DIP16	74HC138	2
Z80CPU		IC5	DIP40	Z80CPU	1
27C64		IC6	DIP28	2764	1
6264		IC7	DIP28	6264	1
74HC244		IC8	DIP20	74HC244	1
74HCU04		IC10	DIP14	74HCU04	1
CM1-5615S		LD1, LD2, LD3, LD4, LD5, LD6	TOS5161AS	7SEGDISPLAY	6
		LED1	5MMLED	LED	1
20K		P1	CERMET	POT20K	1
330R		R1	AXIAL0.4	RES330R	1
1K		R2, R3, R4, R5, R6, R7, R8	AXIAL0.4	RES1K	7
100R		R9	AXIAL0.4	RES100R	1
22K		R10, R11, R12, R13, R14, R19	AXIAL0.4	RES22K	6
560R		R15	AXIAL0.4	RES560R	1
10M		R16	AXIAL0.4	RES10M	1
10K		R17	AXIAL0.4	RES10K	1
2K2		R18	AXIAL0.4	RES2K2	1
100K		R20, R21, R?, R?, R?, R?, R?	AXIAL0.4	RES100K	7
PUSHBUTTON		S1, S2, S3, S4, S5, S6, S7, S8, S9, S10, S11, S12, S13, S14, S15, S16, S17, S18, S19, S20, S21	DUAL_PB	PUSHBUTTON	21
100R		SIL1, SIL2	SIL4	SIL4	2
STRAP		SW1		STRAP	1
BC547		T1, T2, T3, T4, T5, T6, T7	TO-92C	BC547	7
LM7805CT		VR1	TO-220	LM7805CT	1
4.000MHz		XTL1	XTAL1	XTAL4MHZ	1