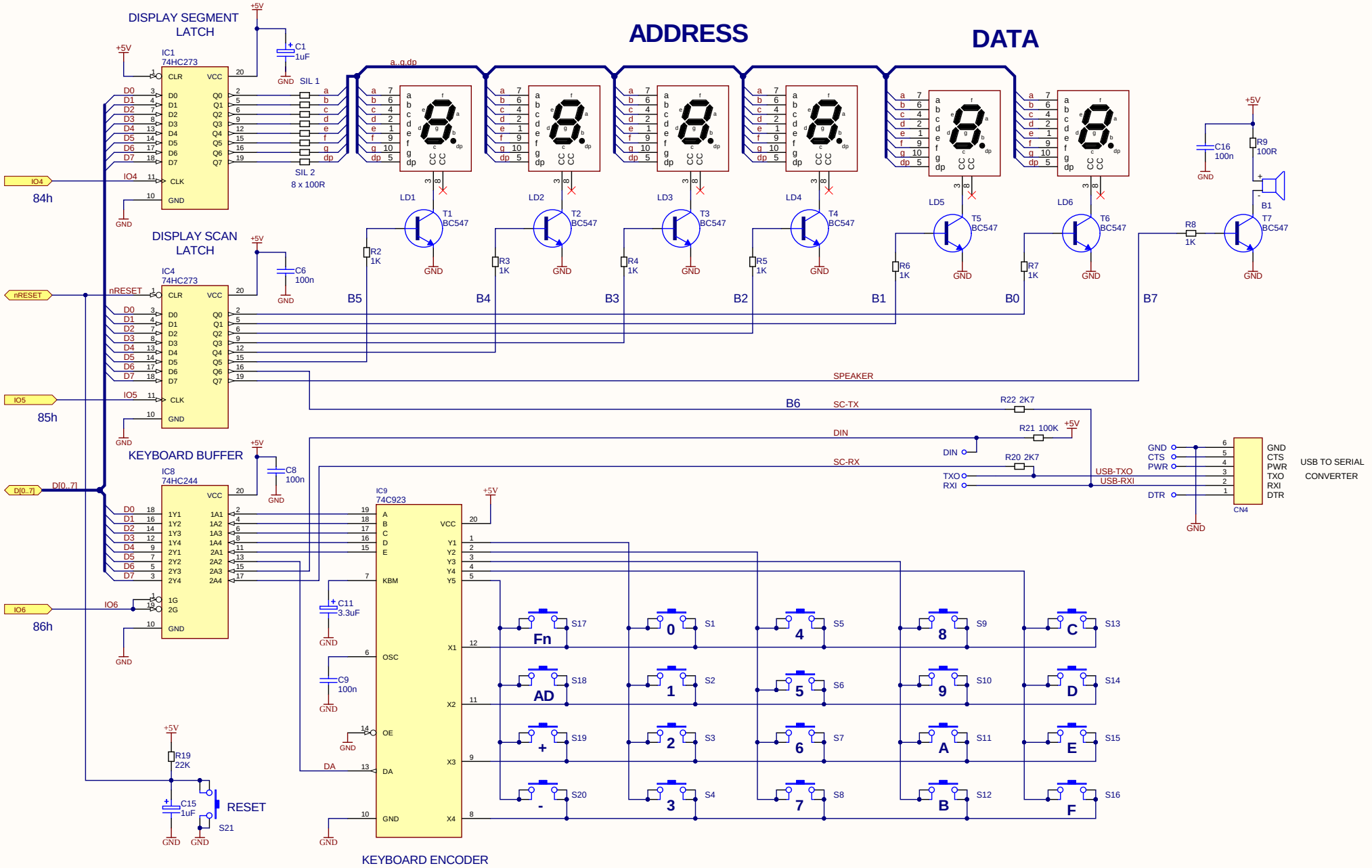

Title	Southern Cross SBC *Keyboard and Display*	
Size: **A3**	Number:	Revision: **3.3**
Date: 11/06/2023 Time: 5:50:57 PM		Sheet 3 of 3
File: SC_KeyboardDisplay33.SchDoc		

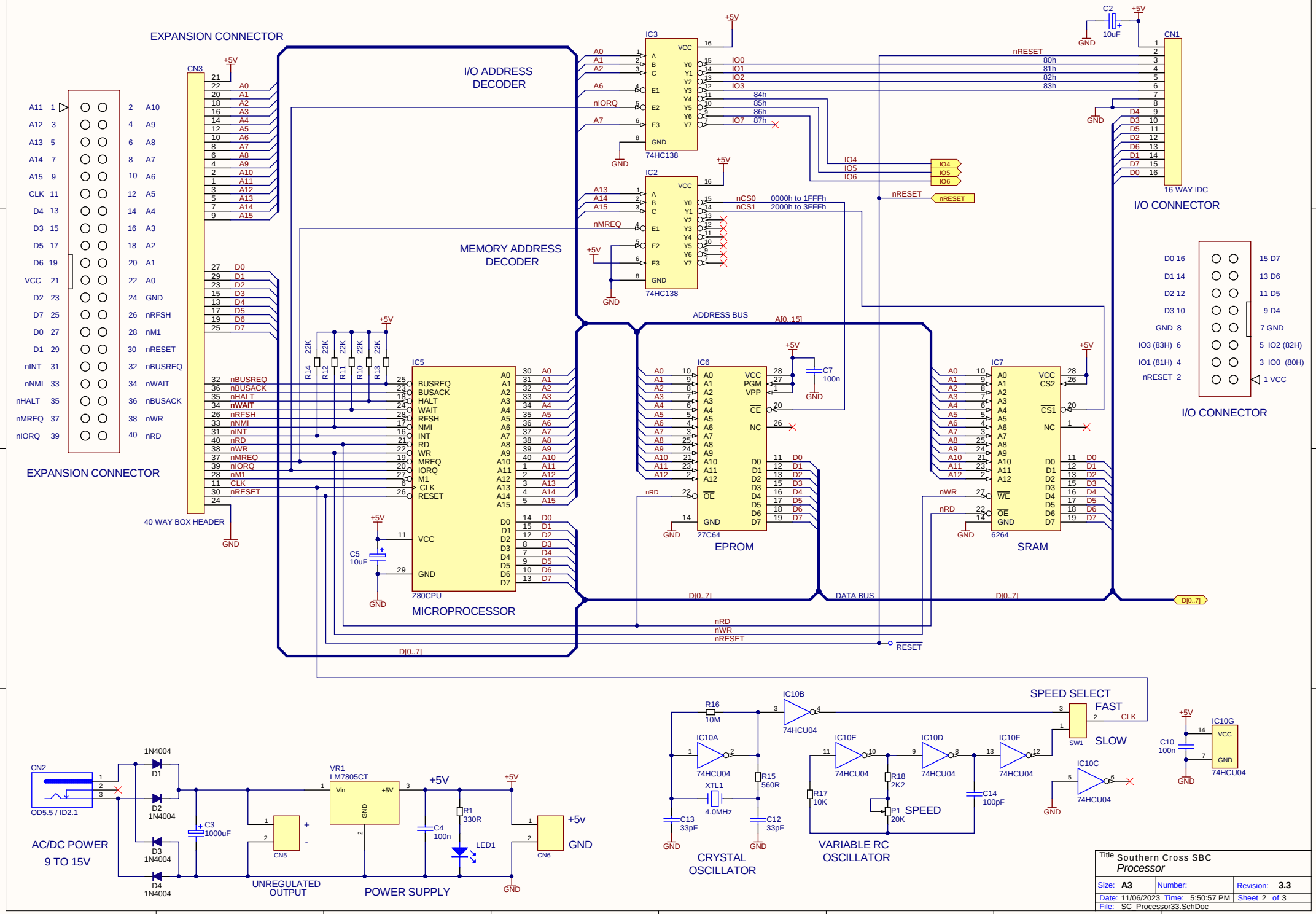
EXPANSION CONNECTOR
CN3
40 WAY BOX HEADER
I/O ADDRESS DECODER
IC3
74HC138
MEMORY ADDRESS DECODER
IC2
74HC138
ADDRESS BUS
A[0..15]
IC5
Z80CPU
MICROPROCESSOR
IC6
27C64
EPROM
IC7
6264
SRAM
DATA BUS
D[0..7]
CN1
16 WAY IDC
I/O CONNECTOR
nRESET
RESET
nRD
nWR
nIORQ
nMREQ
nCS0
nCS1
0000h to 1FFFh
2000h to 3FFFh
84h
85h
86h
87h
80h
81h
82h
83h
IO0
IO1
IO2
IO3
IO4
IO5
IO6
IO7
CN2
OD5.5 / ID2.1
AC/DC POWER
9 TO 15V
1N4004
VR1
LM7805CT
+5V
CN5
UNREGULATED OUTPUT
POWER SUPPLY
LED1
CN6
+5v
GND
IC10A
IC10B
IC10C
IC10D
IC10E
IC10F
IC10G
74HCU04
R16
10M
R15
560R
XTL1
4.0MHz
C13
33pF
C12
33pF
CRYSTAL OSCILLATOR
R17
10K
R18
2K2
P1
20K
SPEED
C14
100pF
VARIABLE RC OSCILLATOR
SPEED SELECT
FAST
SLOW
SW1
CLK
C10
100n
Title
Southern Cross SBC
Processor
Size: A3
Number:
Revision: 3.3
Date: 11/06/2023 Time: 5:50:57 PM
Sheet 2 of 3
File: SC_Processor33.SchDoc