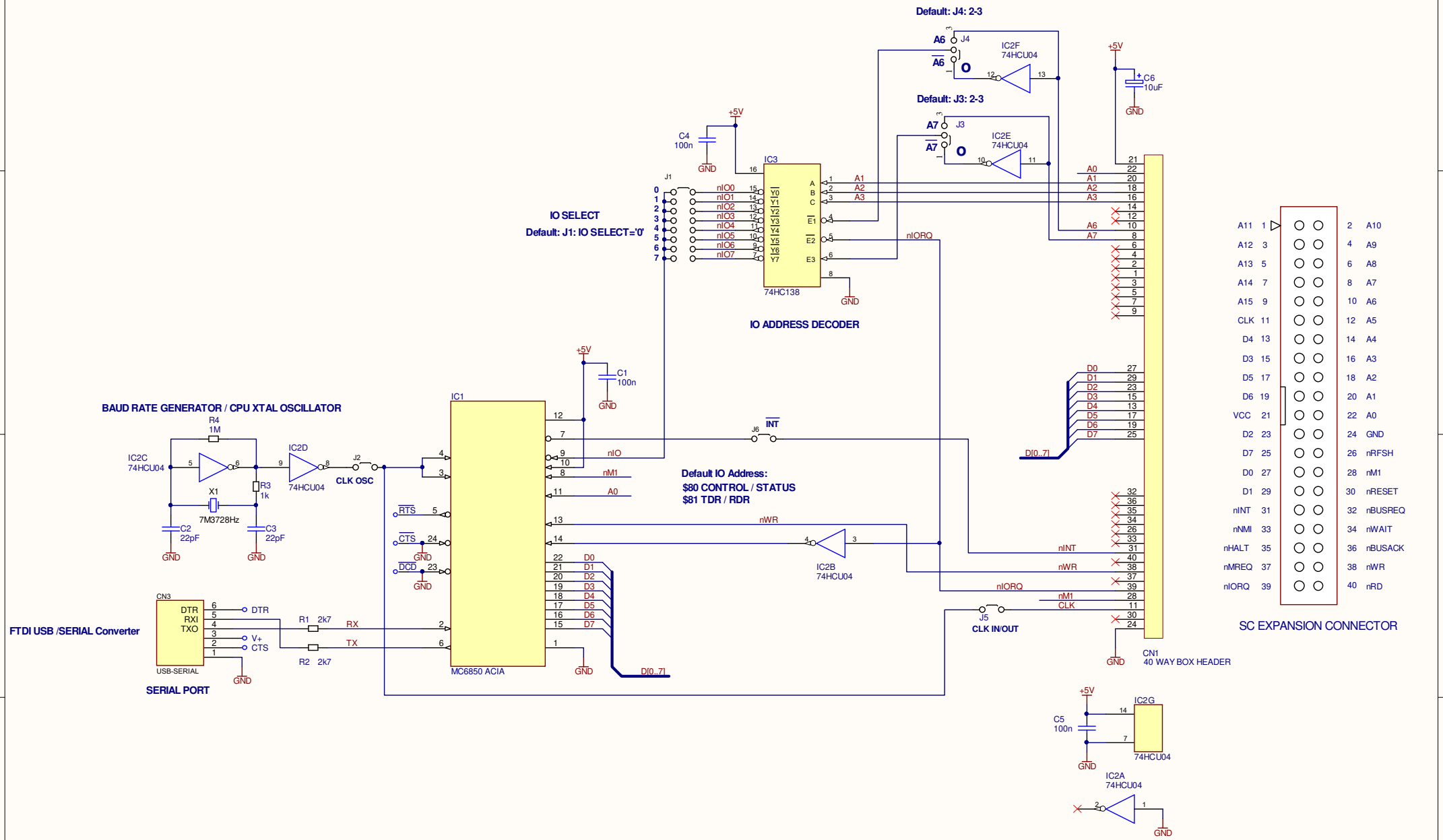

Title	Southern Cross Computer 6850 Serial Interface		
Size: A3	Number:	Revision: 3	
Date: 20/02/2023	Time: 9:59:21 PM	Sheet 1 of 1	
File: SCSerial3.SchDoc			