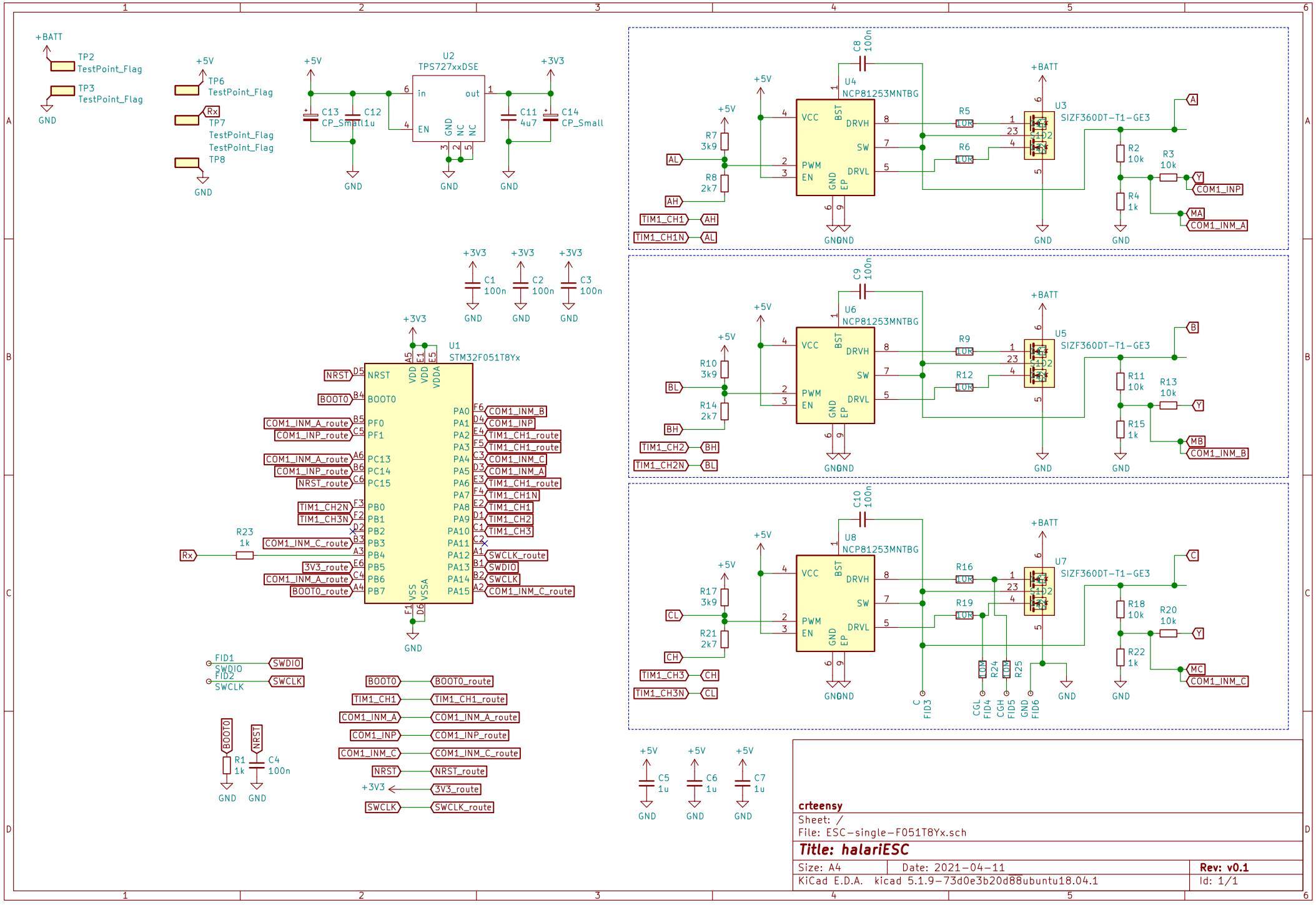

crteensy

Sheet: /

File: ESC-single-F051T8Yx.sch

Title: halariESC

Size: A4	Date: 2021-04-11	Rev: v0.1
KiCad E.D.A. kicad 5.1.9-73d0e3b20d88ubuntu18.04.1		Id: 1/1