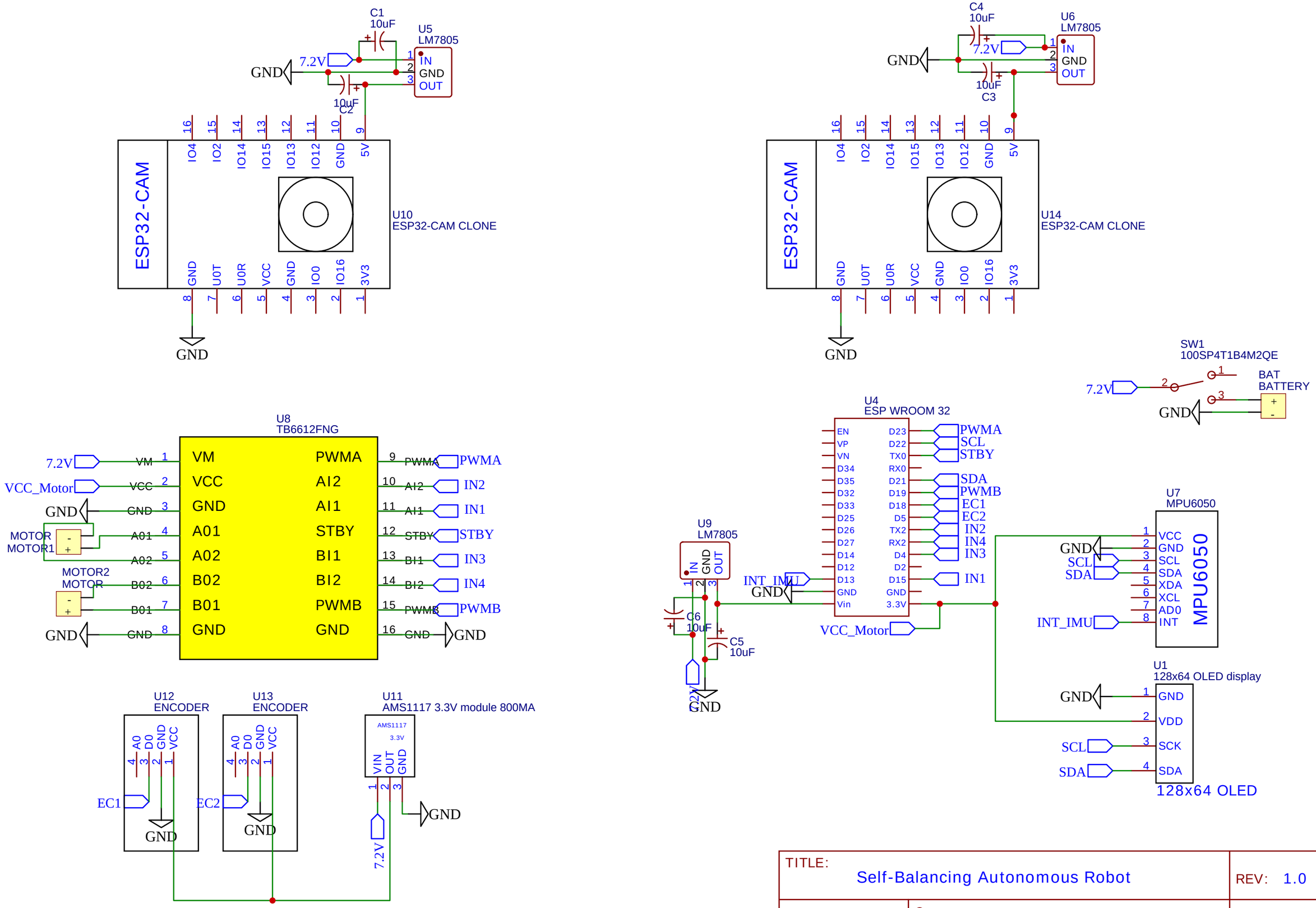

TITLE: Self-Balancing Autonomous Robot	REV: 1.0
EasyEDA — Company:	Sheet: 1/1
Date: 2020-09-02	Drawn By: Vivek Jaiswal