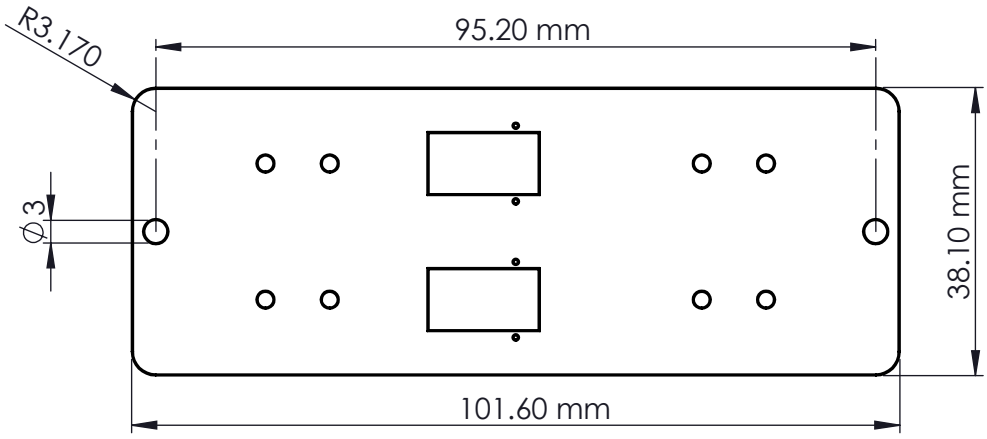

XR8 Soapbar

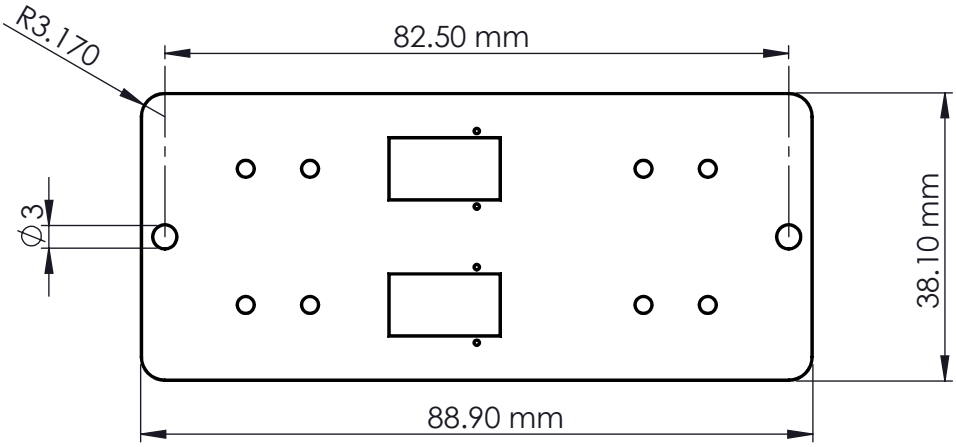

XR7 Soapbar

XR Project by Cycfi Research is licensed under a Creative Commons Attribution-ShareAlike 4.0 International License.

Copyright CYCFI Research Inc. 2013-2016

TITLE: XR Full Width Soapbar Mounting Base	
Document Number: 2016026	REV: v 0.90
Date: 03/15/2016	SHEET: 1/1