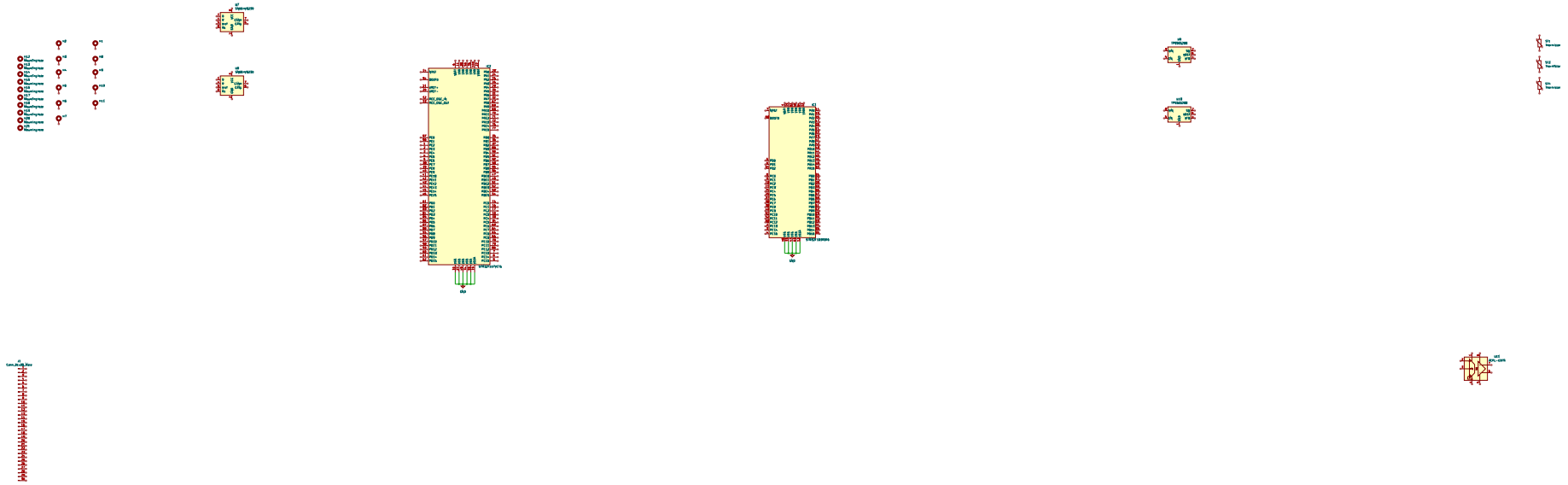

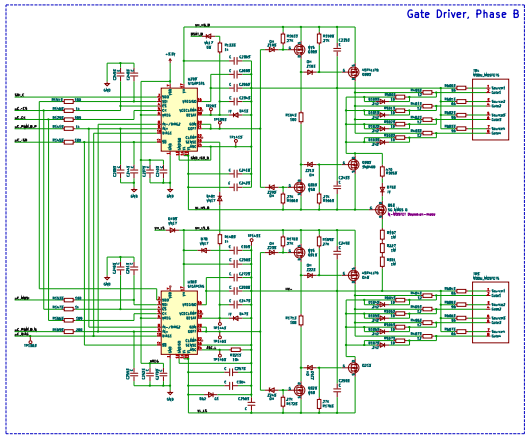

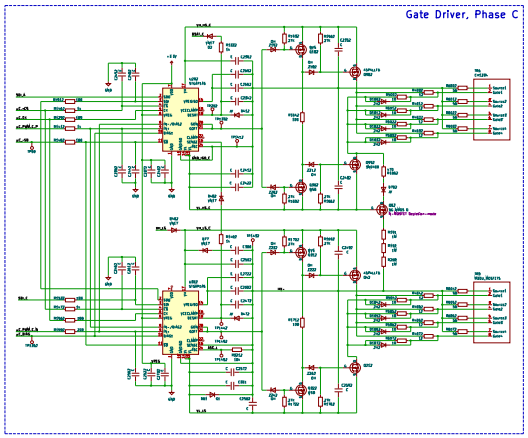

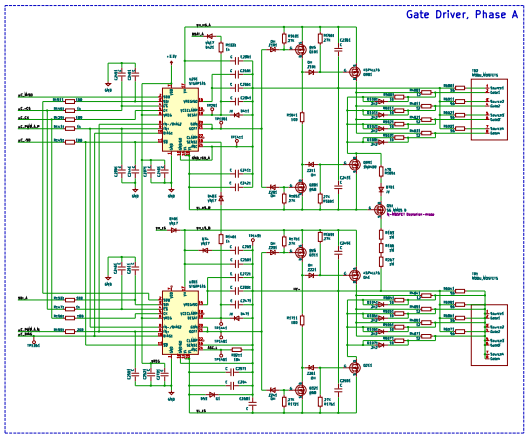

Legend:

- 3V_LS : Regulator output voltage for the switches low side Phase A
- 3V_LS_B : Regulator output voltage for the switches low side Phase B
- 3V_LS_C : Regulator output voltage for the switches low side Phase C
- 3V_HS : Regulator output voltage for the switches high side Phase A
- 3V_HS_B : Regulator output voltage for the switches high side Phase B
- 3V_HS_C : Regulator output voltage for the switches high side Phase C
- 3V_CP : Charge pump voltage for the switches low side Phase A
- 3V_CP_B : Charge pump voltage for the switches low side Phase B
- 3V_CP_C : Gate command input Phase A Negative
- 3V_PGDRV_A : Gate command input Phase A Positive
- 3V_NGDRV_A : Gate command input Phase B Negative
- 3V_PGDRV_B : Gate command input Phase B Positive
- 3V_NGDRV_B : Gate command input Phase C Negative
- 3V_PGDRV_C : Gate command input Phase C Positive

Author	
Checked	
Company	FARMLION, OPENINVERTER.ORG
Drawing	
File	C:\Users\Mathias\Desktop\Mathias\Projekte\Farmlion\Hardware\Logic Board\Logic Board.sch
Title	MOSFET Logic Board
Size	A4
Date	Mittwoch, 2021-08-27
Rev	Rev 0.1
Sheet	1
Sheets	1