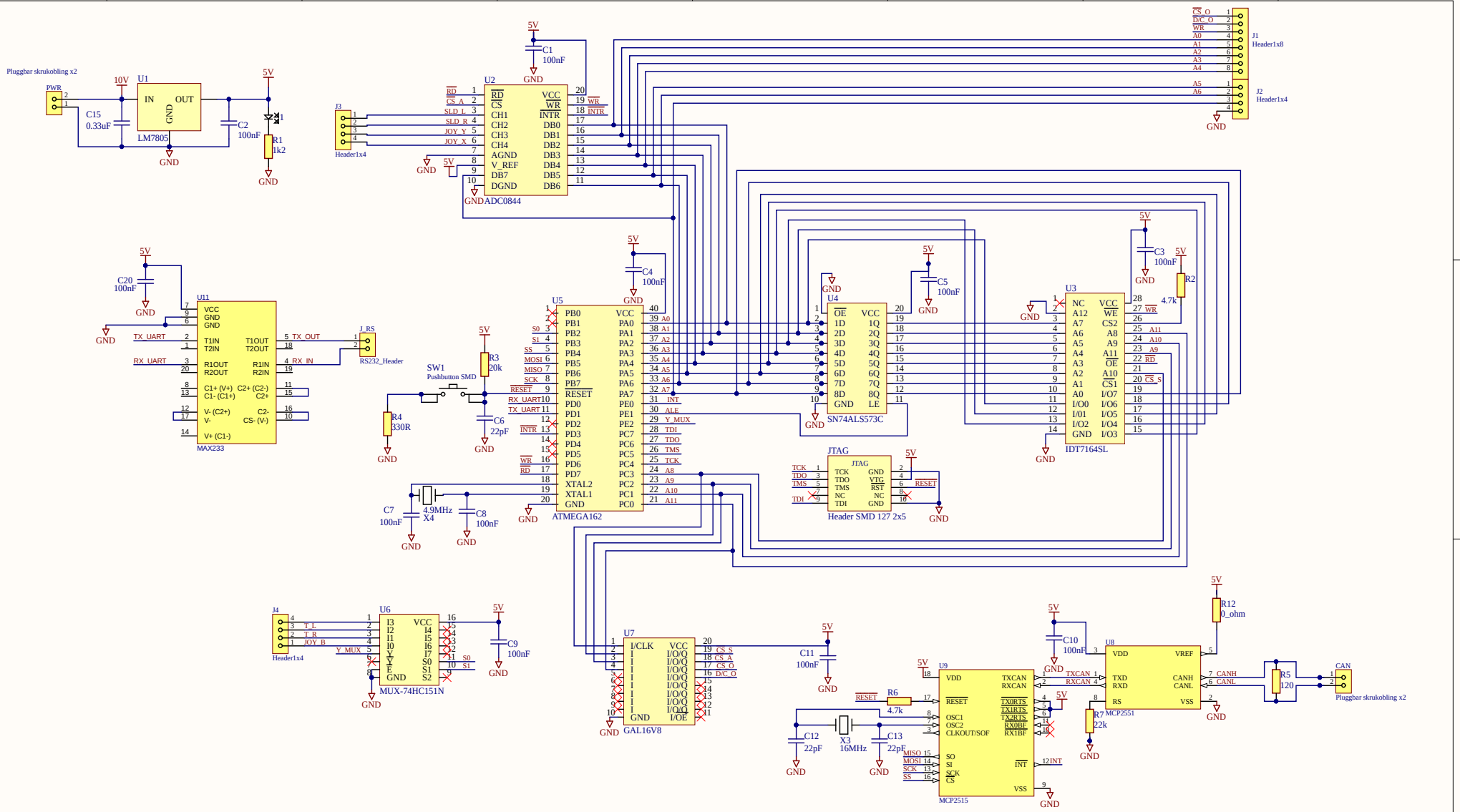

Title: *

Size: A3	Revision: *	Author: *
Date: 16.11.2017	Sheet * of *	*

File: Z:\Brukere\DanSve\Altium\Byggern\Byggernprosjekt\Byggernprosjekt\Node1.1.SchDoc

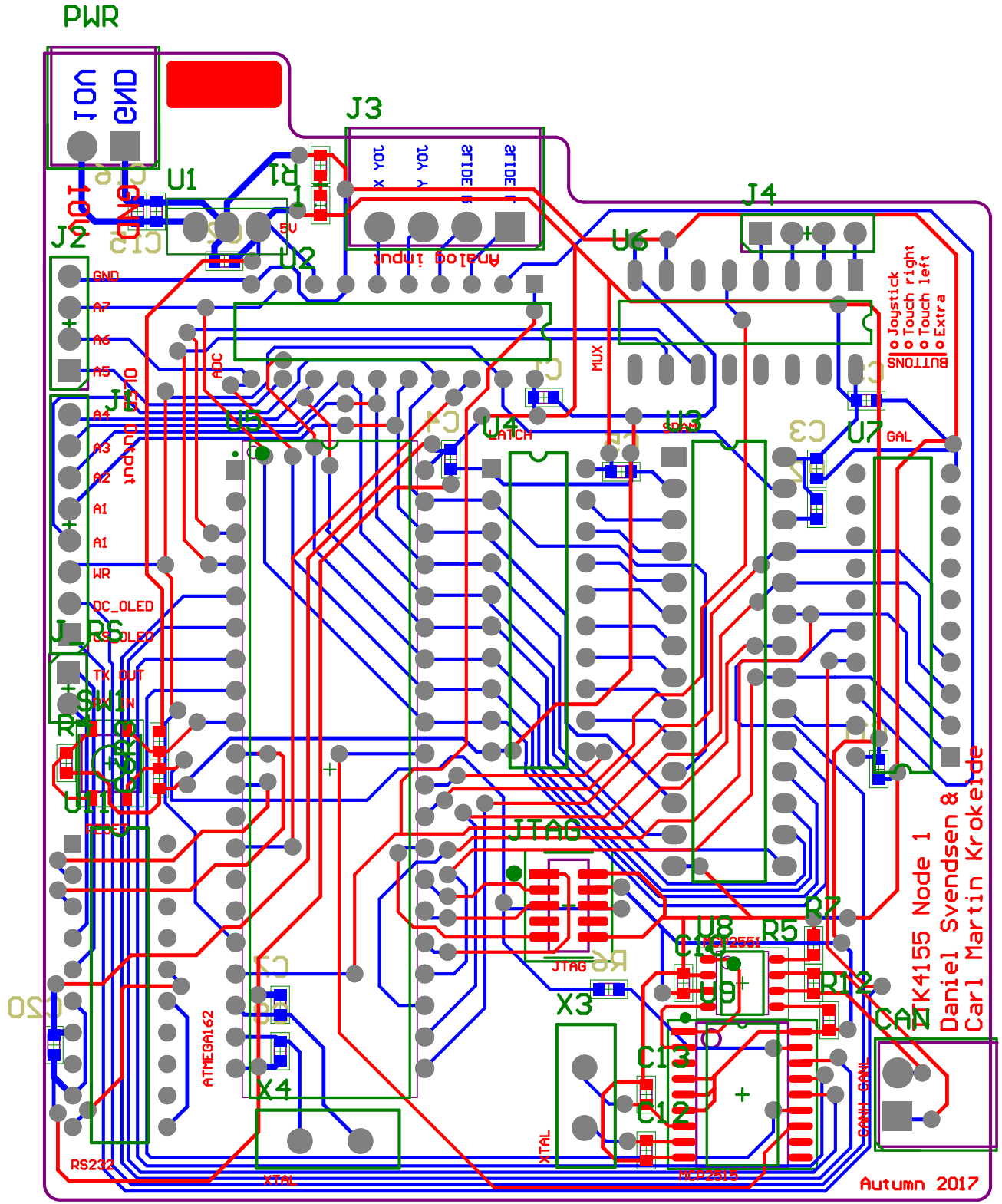
PWR
VCC
GND
J3
Analog input
X VCC
Y VCC
GND
GND
J4
U1
U2
U3
U4
U5
U6
U7
U8
U9
R1
R5
R7
R12
C1
C2
C3
C4
C5
C12
C13
J2
J1
J_RS
J_Y
SW1
R4
X3
X4
JTAG
ATMEGA162
MCP2515
MCP2551
LATCH
MUX
ADC
GAL
XTAL
RS232
CAN
CAN_CANH
CAN_CANL
Joystick
Touch right
Touch left
Extra
BUTTONS
TK4155 Node 1
Daniel Svendsen &
Carl Martin Krokeide
Autumn 2017