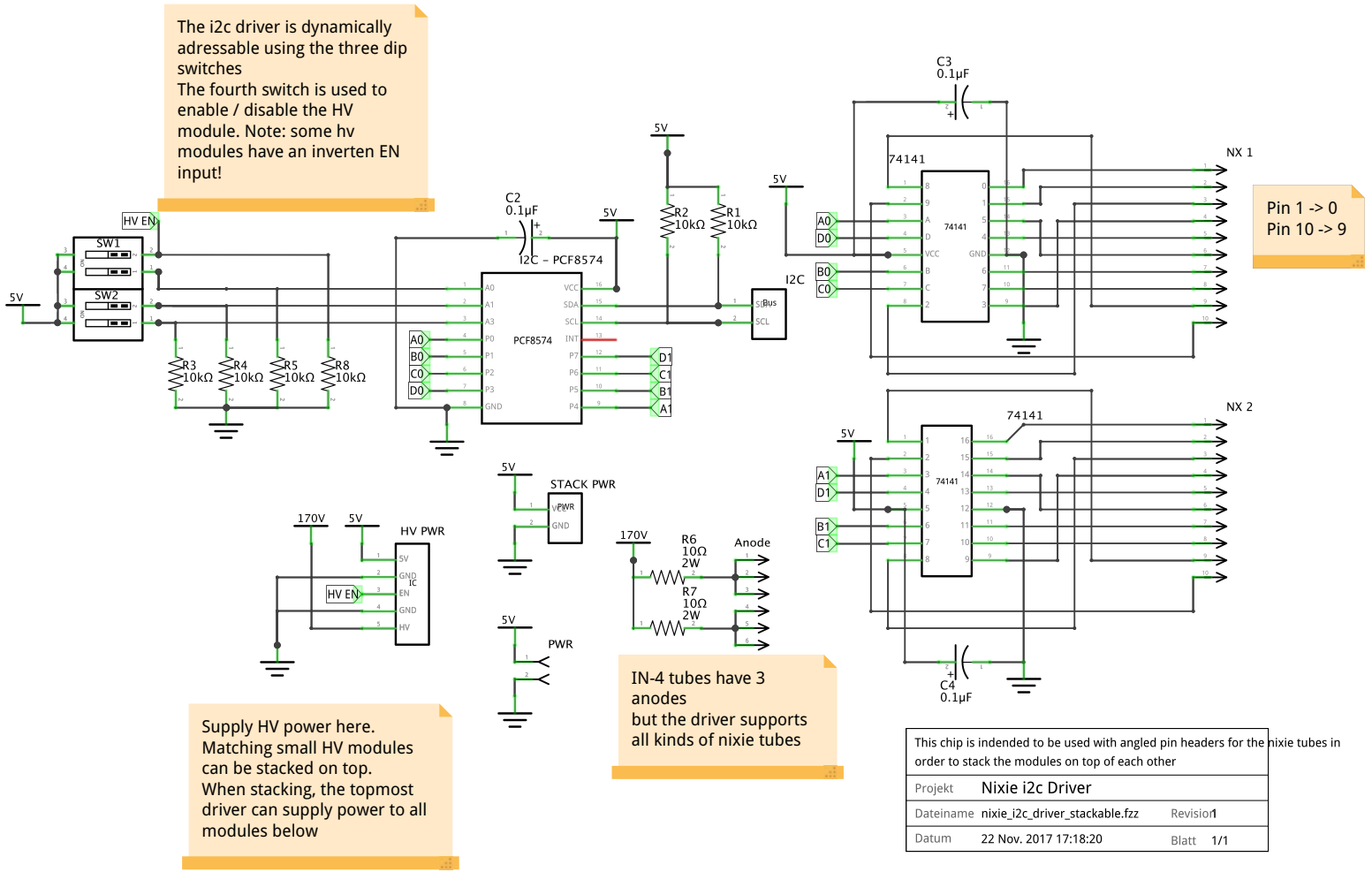
The i2c driver is dynamically adressable using the three dip switches
The fourth switch is used to enable / disable the HV module. Note: some hv modules have an inverten EN input!
HV EN
SW1
SW2
5V
R3 10kΩ
R4 10kΩ
R5 10kΩ
R8 10kΩ
C2 0.1µF
I2C – PCF8574
PCF8574
A0
A1
A3
P0
P1
P2
P3
GND
VCC
SDA
SCL
INT
P7
P6
P5
P4
B0
C0
D0
D1
C1
B1
A1
R2 10kΩ
R1 10kΩ
I2C
Bus
C3 0.1µF
74141
NX 1
Pin 1 -> 0
Pin 10 -> 9
NX 2
C4 0.1µF
STACK PWR
PWR
GND
170V
HV PWR
IC
EN
HV
R6 10Ω 2W
R7 10Ω 2W
Anode
Supply HV power here.
Matching small HV modules can be stacked on top.
When stacking, the topmost driver can supply power to all modules below
IN-4 tubes have 3 anodes
but the driver supports all kinds of nixie tubes
This chip is indended to be used with angled pin headers for the nixie tubes in order to stack the modules on top of each other
Projekt Nixie i2c Driver
Dateiname nixie_i2c_driver_stackable.fzz Revision 1
Datum 22 Nov. 2017 17:18:20 Blatt 1/1
fritzing