File ref: BCA0560/17
Name: David Nolan
Email: dnolan@pcc.govt.nz
Phone: 04 237 5089

Kia ora

D W Timmins
146 Kahu Road
Paremata
Porirua 5024

Dear Sir

NOTICE OF FEES RELATING TO APPROVED BUILDING CONSENT BCA0560/17
53 Banks Boulevard Whitby, Porirua City 5024
Two storey dwelling incorporating 4 bedrooms, ensuite, WC, bathroom, study, kitchen/dining/lounge, double garage/laundry.
Timber retaining walls.

I am pleased to inform you that the above building consent application has been approved.

If you have any queries regarding your invoice, please contact the Business Support Administration Team on (04) 237 5089 and quote your application number above.

Yours Sincerely

Pp

David Nolan
Building Compliance Centre
Policy, Planning and Regulatory Services
On behalf of: Porirua City Council

Date: 24 November 2017

COPY

Porirua City Council
PO Box 50218
Porirua 5240
04 237 5089
enquiries@poriruacity.govt.nz
poriruacity.govt.nz

poriruacity

TAX INVOICE

Porirua City Council
GST Registration No. 53-037-169
Phone: (04) 237 5089
Fax: (04) 237 6384
P O Box 50 218
Porirua City 5240

This invoice includes GST on the amount owing

D W Timmins
146 Kahu Road
Paremata
Porirua 5024

Invoice Issue Date: 24 November 2017

Invoice No: 1180

Application No: BCA0560/17

Project Address: 53 Banks Boulevard Whitby, Porirua City 5024

Charge Description	Charge	GST	Amount
Prior Payment			($1,724.00)
Building Consent Residential Admin Fee	$61.74	$9.26	$71.00
BRANZ Commission	$16.52	$2.48	$19.00
BRANZ levy	$601.00	$0.00	$601.00
CCC Residential New & Commercial Building Works	$313.48	$47.02	$360.50
MBIE Commission	$32.17	$4.83	$37.00
MBIE Levy	$1,051.30	$157.70	$1,209.00
BC Inspections Fee	$1,378.26	$206.74	$1,585.00
Building Processing Charge	$482.09	$72.31	$554.40
Department Processing Charge	$235.53	$35.33	$270.86
Total	$4,172.09	$535.67	$2,983.76

COPY

INVOICE TERMS: Invoices are due **IMMEDIATELY**
Outstanding debts maybe transferred to a collection agency or Solicitor for recovery; collection charges will be on charged to customer;

PAYMENT METHODS: *Cash, EFTPOS or cheque* via Council Administration Building 16 Cobham Court Porirua (Reference your application #) OR

Bank to Bank via PCC's bank account: **Porirua City Council** Westpac **030547 0240008 001** (Reference your application#; property; name)

PARTICULARS	CODE	REFERENCE
Enter Your Property Address	**Enter Your Application Number**	**Enter Name**
example 16 Cobham Ct	example BCAXXXX-XX	example AryaJones

RESOURCE CONSENT (RC) ADDITIONAL INFORMATION:

OBJECTION PROCESS UNDER THE RMA: This Invoice is for the recovery of additional fees & charges for the processing of your resource consent for time spent beyond what was covered by the lodgement fee. (b) Under section 357B of the Resource Management Act 1991 you have a right to object in writing to any additional charge made under Section 36(3) of the Resource Management Act 1991 that appears on this invoice. Notice of objection must be received by the Council within 15 working days of the receipt of the invoice and decision letter. **END OF YEAR INTERIM INVOICES:** An Interim invoice to settle the RC processing fees and charges for each financial year will be issued around 30 June.

REFUNDS: Building Consent refunds are processed at Code Compliance Certificate stage; Resource Consent refunds are processed at Resource Consent Grant stage.

PCC #5330778
P O Box 50 218
Porirua City

REMITTANCE ADVICE - Please detach and return with payment

Invoice Issue Date: 24/11/2017
Invoice No: 1180
Application No: BCA0560/17
Entity Liable for Invoice: D W Timmins
Amount Due: $2,983.76

COPY

File ref: BCA0560/17
Name: David Nolan
Email: dnolan@pcc.govt.nz
Phone: 04 237 5089

Kia ora

24 November 2017

D W Timmins
146 Kahu Road
Paremata
Porirua 5024

Dear Sir

Approval of Building Consent BCA0560/17
53 Banks Boulevard Whitby, Porirua City 5024

Two storey dwelling incorporating 4 bedrooms, ensuite, WC, bathroom, study, kitchen/dining/lounge, double garage/laundry. Timber retaining walls.

I am pleased to inform you that the above building consent application has been approved.

Before starting any work please read these documents carefully and in full.

The building consent attached to this letter is consent under the Building Act 2004 to undertake building work in accordance with the plans and specifications that accompanied your application. Under section 49 of that Act, Council is satisfied that the provisions of the building code would be met if the proposed building work were completed in accordance with those plans and specifications. This consent does not affect any duty or responsibility under any other Act or permit any breach of any other Act.

Enclosed with this letter is:

- The Building Consent & any related attachments
- Building Consent Advice Notes

David Nolan
Senior Building Compliance Officer
Building Compliance Centre
Policy, Planning and Regulatory Services
On behalf of: Porirua City Council

PORIRUA CITY COUNCIL

Building Consent

BCA0560/17

The building

Street address of building:	53 Banks Boulevard Whitby, Porirua City 5024
Legal description of land where building is located:	Lot 850 DP 496906
Building Name:	
Location of building within site/block number:	
Level/unit number:	

The owner

Name of Owner:	D W Timmins, J L Timmins
Contact person:	
Mailing address:	146 Kahu Road Paremata Porirua 5024,
Street address/registered office:	146 Kahu Road Paremata Porirua 5024,
Phone number:	
Landline:	04 233 0129 ,
Mobile:	0226580325 ,
Daytime:	04 802 6215 ,
After hours:	04 233 0129 ,
Facsimile number:	
Email address:	davetimmins@outlook.com ,
Website:	

First point of contact

First point of contact for communications with the Building Consent Authority:

Full Name:	David Ward Timmins
Mailing address:	146 Kahu Road Paremata Porirua 5024,
Landline:	04 802 6215 ,
After hours:	04 233 0129 ,
Mobile:	0226580325 ,
Facsimile number:	
Email address:	davetimmins@outlook.com ,

Building work

The following building work is authorised by this building consent:

Two storey dwelling incorporating 4 bedrooms, ensuite, WC, bathroom, study, kitchen/dining/lounge, double garage/laundry. Timber retaining walls.

This building consent is issued under section 51 of the Building Act 2004. This building consent does not relieve the owner of the building (or proposed building) of any duty or responsibility under any other Act relating to or affecting the building (or proposed building). This building consent also does not permit the construction, alteration, demolition, or removal of the building (or proposed building) if that construction, alteration, demolition, or removal would be in breach of any other Act.

Compliance schedule

A compliance schedule is not required for the building.

David Nolan
Senior Building Compliance Officer
Building Compliance Centre
Policy, Planning and Regulatory Services
On behalf of: Porirua City Council

Date: 24 November 2017

PORIRUA CITY COUNCIL

Date:	24 November 2017
Application number:	BCA0560/17
Description of consent:	Two storey dwelling incorporating 4 bedrooms, ensuite, WC, bathroom, study, kitchen/dining/lounge, double garage/laundry. Timber retaining walls.
Site address:	53 Banks Boulevard Whitby, Porirua City 5024

Building Consent Advice Notes

1. All Restricted Building Work is to be carried out or supervised by a Licensed Building Practitioner (LBP) who has a licence for that aspect of work.
2. All of the building work is to comply with the requirements of the Building Act 2004.
3. This consent will lapse if you do not commence work within 12 months of the date of issue or agree an extension of time with the Building consent authority
4. This building consent does not give or imply any rights to transgress beyond your legal boundaries. Any work, inclusive of access, that is required beyond your legal boundaries can only be undertaken with the permission of the affected owner/s.
5. Where building work is to be undertaken to which this building consent relates, and is not shown in detail on the approved plans and/or specification, such building work is to be completed to acceptable building standards and to the requirements of the New Zealand Building Code 1992.
6. The official stamped copy of the plans and specifications as approved for consent purposes are to be held on the site at all times during the period of the work.
7. To book an **inspection**, please phone **04 237 3844**.
8. If you cancel an inspection with less than 24 hours' notice, you may be charged for that inspection. Description of inspections below:

Building

- Site; location of the building on site (a Surveyor's report or visible boundary markers)
- Foundation; before placing any concrete for foundation walls or footings
- Pre-Slab; before placing any concrete to floor slabs and any integral footings
- Retaining Wall; before back-filling against any wall and/ or covering any tanking system
- Pre-Wrap; prior to fitting building wrap to framing with mechanical fixings, external bracing elements installed
- Pre-Clad; upon completion of the building wrap with cavity battens, flashings/tapes, installed before fitting any external cladding and joinery
- Brick; brick work at half height

- Pre-Line; before fitting internal linings, installing wet area membranes, air-seals complete with backing foam fitted internally around joinery, bracing connections complete, insulation installed
- Post-Line; post line bracing while fixings are still visible
- Post-Line; wet area membranes; inspection of installed wet area membranes before installation of finish surfaces such as tiles
- Final; final inspection on completion of all building work following a formal application for a Code Compliance Certificate (form supplied with approved consent documentation)

Plumbing and drainage

- Drainage; testing any drainage work prior to back filling
- Drainage; testing any sub-soil drainage work prior to back filling
- Pre-Slab; plumbing in/under the floor slab
- Pre-Line: plumbing systems before fitting any linings
- Final; final inspection on completion of work

9. If required inspections are not undertaken you may experience difficulty in obtaining a Code Compliance Certificate for the project. We suggest that at the time of the first inspection you discuss the inspection requirements with the inspecting officer.
10. The required building & plumbing inspections are identified on the attached Porirua City Council production sheet.
11. A copy of the approved plans must be kept on site.
12. The above inspections will be carried out by the Council with 3 working days' notice subject to the availability of staff. Please book your inspections as early as possible to ensure an inspector is available.
13. Additional inspections may be necessary, depending on the nature of the building work and the manner of construction, or as a result of non-complying or incomplete work. The Council may require prior notification of work proceeding before covering up or closing in, subject to arrangement with the Building Inspector.
14. All additional inspections are charged at the rate applicable at the time (see link http://www.pcc.govt.nz/A-Z-Services/Fees-and-Charges/Building-Consents-Fees#table5) and are invoiced separately.
15. Further information on inspections is available on our website at http://www.pcc.govt.nz/A-Z-Services/Building-Consents/Building-Inspections
16. To book an inspection phone **04 237 3844. Note if you cancel an inspection with less than 24 hours' notice, you may be charged for that inspection.**
17. Record of Work on Form 6A (memorandum from licensed building practitioner) is required under Section 88, Building Act 2004 for every person who carried out or supervised Restricted Building Work.
18. Prior to calling for your final inspection you should ensure that the required smoke detectors are fitted in the correct locations and in full compliance with NZBC F7, Type 1 Domestic Smoke

---

Structural:

Engineer shall inspect the works covered by their design and provide a PS4 statement on completion

David Nolan Phone: 237 1616

Building:

This consent has been assessed as having Restricted Building Work, therefore requiring the services of Licensed Building Practitioners.

This site has the following attributes:

a) Wind Zone: High
b) Corrosion Zone: Zone C

This consent has been assessed and approved with the following products/systems:-

a) Tanking membrane to be Ardex Shelterseal 3000X
b) Exterior cladding to be (1) 70 Series brick veneer
(2) Timber bevelback weatherboard
c) Roofing to be MC700 trapezoidal colorsteel Maxx
d) Water-proof membrane to internal wet areas to be Ardex Superflex
e) Insulation to be R2.6 Ultra wall batts, R3.2 ceiling batts

Please note: a) all proprietary systems to be installed as per manufacturers specification/details and the appropriate BRANZ's appraisal.

The approved installer is to certify installation meets these requirements and the manufacturer is to issue a warranty guaranteeing compliance with B2 and E2 of NZBC for a minimum of 15 years for items that can be easily replaced/recoated and 50 years for tanking and items that must last the life of the building

b) any changes to these systems/products will require additional approval in the form of an 'amended plan' prior to commencement of work.

David Nolan Phone: 237 1616

Plumbing and drainage:

Work is approved as per submitted documentation

David Nolan Phone: 237 1616

Other Approvals

The following items need to be addressed to comply with the following legislation: Local Government Act, Health Act, hazardous Substances New Organisms Act, Porirua City Council (Consolidated) Bylaw/s, and Porirua City Council Trade Waste Bylaw:

Resource Management Act 1991:

Work is to comply with granted Resource Consent #7436

Site:

Construction work on buildings shall be performed in a manner that avoids the likelihood of causing danger or hazards to people or property on or off site, & comply with the requirements of NZBC F5 (Construction & Demolition Hazards).
Areas of construction must be adequately fenced off to prevent the access of unauthorised persons and to safeguard the public.

All loading to be done on site

Ensure all loose materials that are capable of being carried by the wind are either secured or removed from site
All activities must be carried out in a manner that keeps to a minimum the dust nuisance to adjoining properties

Noise: construction, maintenance or demolition activities must be in compliance with the following:
(a) Section 16 [Duty to Avoid Unreasonable Noise] of the Resource Management Act and NZS6803: No work with noisy equipment is to be carried out before 7.30am or after 6pm Monday to Saturday
Work with noisy equipment is not permitted on Sundays and Public Holidays

---

PCC Silt and Sediment Control Bylaw:

The Bylaw states that owners of properties must ensure that any development activity disturbing the soil is carried out in a way to prevent soil erosion and to stop silt and sediment from entering the stormwater system or watercourses as required under the Resource Management Act 1991 and the Building Act 2004 and their amendments.
The Bylaw also states that no person shall carry out any development activity in relation to any land without first ensuring that surface runoff from the site is isolated from other sites and roading systems; and surface runoff from the site containing silt and sediment is prevented from entering the stormwater system or watercourses; and silt and sediment control measures are installed, where necessary.

Public Drainage:

Sewer connection

That a separate sewer connection shall be provided to the boundary of each Lot or separate habitable dwelling if not already existing at the applicant expense. The connection shall be complete with cleaning eye situated at ground level contained within a Council approved box. The connection shall be as per Figure 10 G/13 AS2. The lid of each box shall be the colour white with the words SS clearly visible. This connection shall be provided to the acceptance and satisfaction of the Manager: Asset Management and Operations Porirua City Council and shall be installed prior to issue of code compliance.

Water connection

That a separate 20mm water connection shall be provided to each Lot or separate habitable dwelling from the boundary of road reserve if not already existing at the applicant's expense. Each Lot shall be entitled to only one connection. Each water connection shall be fitted with an approved meter manifold and box with base plate situated at ground level. The lid of each box shall be the colour blue with the word WATER clearly visible. Any connection shall be provided to the acceptance and satisfaction of the Manager: Asset Management and Operations Porirua City Council prior to issue of Code Compliance

Storm-water Connection
That a separate storm-water connection no larger than a 100mm ID shall be provided to the boundary of each Lot or separate habitable dwelling, if not already existing at the applicant expense. Each Lot shall be entitled to only one connection. That the applicant shall disposal of storm-water runoff in an effective and responsible way and shall avoid creating any averse or negative effects to the environment such as erosion or scouring or a nuisance to surrounding properties or areas.

Service Connections
That all Connections / Disconnections into or from Councils underground service network shall be applied for through Council in writing in the appropriate format. (forms on PCC Web site) All works up to the boundary of the Lot or involving Council mains contained within road reserve, easements or service corridors shall be carried out by Councils Works business Unit at the applicant's expense. Even though Council endeavours to supply correct and accurate information to applicants regarding public underground service mains, it cannot be 100% guaranteed, it shall be deemed the applicants full responsibility to verify the actual and physical location of any underground service mains within the property boundaries with that correct information being included in any building consent application or engineering design submitted to Council for acceptance.

Damage
That if any damage is sustained to existing Council infrastructure directly attributed to or resulting from the initial construction phase of any development or structure or found to be the cause resulting in damage at a later time by the applicant or his or her representatives or contracted employees actions, then it shall be the full responsibility of the owner/developer at their cost to repair it to the satisfaction of Manager: Asset Management and Operations, Porirua City Council.

Public Stormwater protection
The applicant shall ensure that the nearest downstream stormwater sump or channel to the construction or building site leading to the public network, is protected by an appropriate enviro pod or filters fitted into the sump or collection area to collect debris runoff from the site before entering the public network or natural drainage ways.
It shall be the applicants' responsibility to ensure this is maintained and cleaned out regularly and to ensure no interruption of normal stormwater flows. This enviro pod or filters shall be installed throughout the duration of the building phase and removed once the construction is complete.

Services Engineer	04 237 1404

Vehicle Access:

New and revamped vehicle crossing, their location and design, requires approval from PCC to ensure they comply with the requirements for either: Rural, Heavy Duty or Domestic Type crossings.

Vehicle Access Officer	Asset Management Operations	04 237 1472

PORIRUA CITY COUNCIL PRODUCTION

Consent No: **BCA0560/17** **Building Category: R2**

Site Address: **53 Banks Boulevard, Whitby, Porirua City 5024**

Owner/Agent: **Timmins David Ward**

Inspections Required

The following inspections are required:

1	Site	Inclusive High Voltage Transmission Lines
1	Pre Slab	
1	Underslab Plumbing	
1	Sewer Drainage	
1	Stormwater Drainage	
1	Pre Wrap	
1	Pre Clad	
1	Brick Veneer	
1	Retaining Wall & tanking	
1	Preline Building	
1	Preline Plumbing	
1	Postline	
1	Membrane	
1	Final Inspection	
14	Total Inspections	

Documentation Required

The following documentation is required:

Application form for CCC	
Electrical certificate	
Gas certificate	if applicable
As-built drainage plan	
PS3 - Waterproofing membrane (internal)	Ardex superflex
PS3 - Waterproofing membrane (external)	Ardex Shelterseal 3000X
PS4 - Construction review (structural)	
Record of Work on Form 6A (memorandum from LPB)	

Licensed Building Practitioners

The following Restricted Building Work must be carried out or supervised by a registered Licensed Building Practitioner (LBP) and a Record of Building Work form signed by each LBP is required at the completion of the work.

Carpenter 1

Electrical Worker

Plumber

Drainlayer

COMPUTER FREEHOLD REGISTER
UNDER LAND TRANSFER ACT 1952

Search Copy

R.W. Muir
Registrar-General
of Land

Identifier	**732712**
Land Registration District	**Wellington**
Date Issued	11 May 2016

Porirua City Council
Approved Consent Document
24 NOV 2017
0560/17
BCA Number
David Nolan
On behalf of Porirua City Council

Prior References
716705

Estate	Fee Simple
Area	1520 square metres more or less
Legal Description	Lot 850 Deposited Plan 496906

Proprietors
David Ward Timmins and Josie Lorraine Timmins

Interests

Appurtenant to part formerly Lot 306 DP 480048 is a right of way and rights to water supply, sewage and stormwater drainage, electricity, gas, telecommunications and computer media created by Easement Instrument 6878032.14 - 24.5.2006 at 9:00 am

The easements created by Easement Instrument 6878032.14 are subject to Section 243 (a) Resource Management Act 1991

Land Covenant in Easement Instrument 10269524.24 - 27.11.2015 at 4:45 pm

10394620.9 Consent Notice pursuant to Section 221 Resource Management Act 1991 - 11.5.2016 at 1:45 pm

Subject to a right to drain water and sewage and surface water (in gross) over parts marked ZH & ZY on DP 496906 in favour of the Porirua City Council created by Easement Instrument 10394620.33 - 11.5.2016 at 1:45 pm

The easements created by Easement Instrument 10394620.33 are subject to Section 243 (a) Resource Management Act 1991

Subject to a right to convey water, gas, electricity, telecommunications and computer media and a right to drain water and sewage over parts marked ZY & ZH on DP 496906 created by Easement Instrument 10394620.35 - 11.5.2016 at 1:45 pm

Land Covenant in Easement Instrument 10394620.36 - 11.5.2016 at 1:45 pm

Subject to a right (in gross) to convey telecommunications and computer media over part marked ZH and ZY on DP 496906 in favour of Chorus New Zealand Limited created by Easement Instrument 10487853.1 - 26.7.2016 at 12:53 pm

Subject to an electricity and telecommunications easement (in gross) over part marked ZH and ZY on DP 496906 in favour of Wellington Electricity Lines Limited created by Easement Instrument 10487853.2 - 26.7.2016 at 12:53 pm

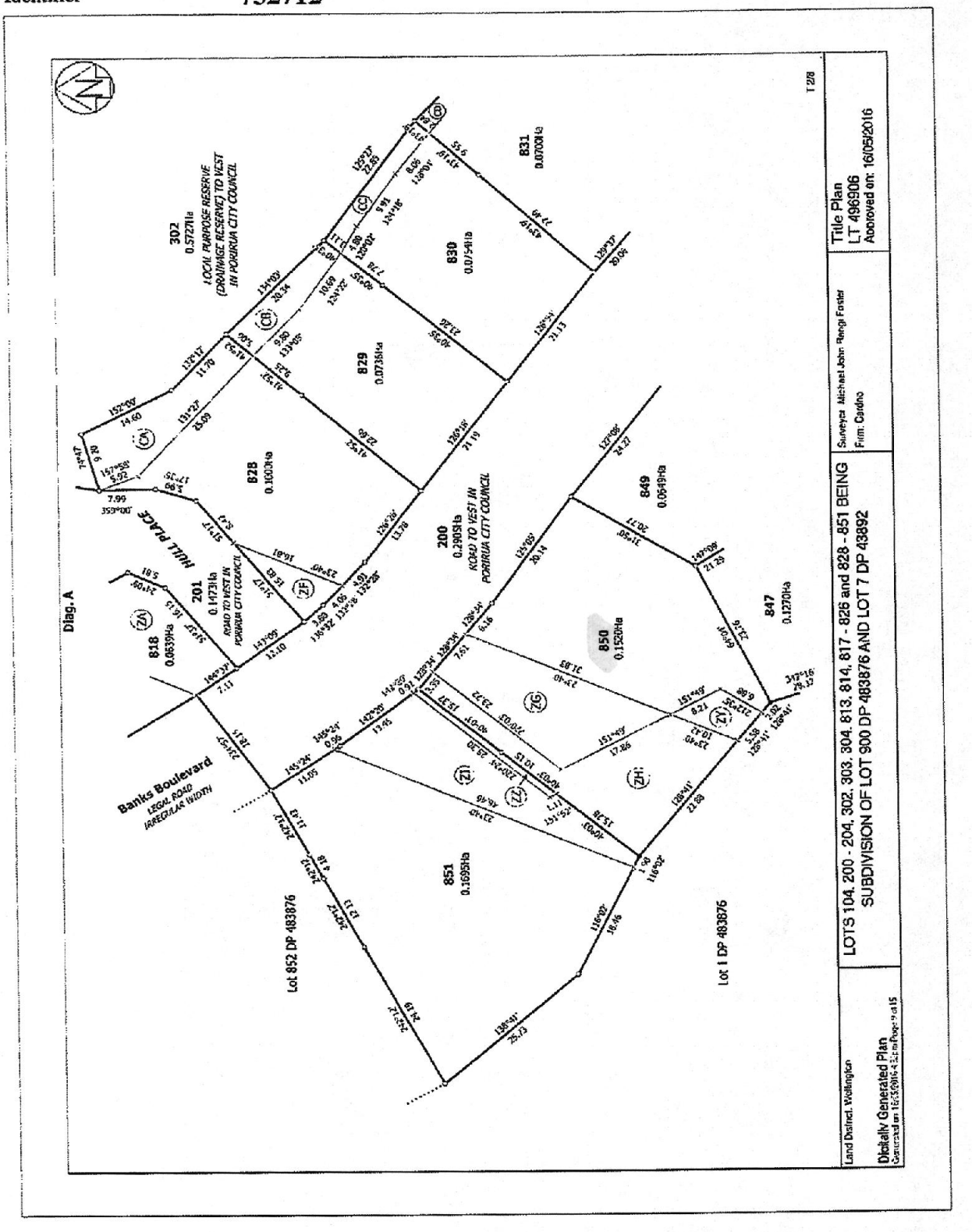
Diag. A
302
0.5721Ha
LOCAL PURPOSE RESERVE
(DRAINAGE RESERVE) TO VEST
IN PORIRUA CITY COUNCIL
831
0.0700Ha
830
0.0754Ha
829
0.0735Ha
828
0.1000Ha
HILL PLACE
200
0.2905Ha
ROAD TO VEST IN
PORIRUA CITY COUNCIL
201
0.1473Ha
ROAD TO VEST IN
PORIRUA CITY COUNCIL
818
0.0839Ha
849
0.0549Ha
847
0.1270Ha
850
0.1520Ha
851
0.1695Ha
Banks Boulevard
LEGAL ROAD
IRREGULAR WIDTH
Lot 852 DP 483876
Lot 1 DP 483876
T 2/8
Land District Wellington
Digitally Generated Plan
Generated on 16/05/2016 4:21:01 PM Page 1 of 15
LOTS 104, 200 - 204, 302, 303, 304, 813, 814, 817 - 826 and 828 - 851 BEING
SUBDIVISION OF LOT 900 DP 483876 AND LOT 7 DP 43892
Surveyor: Michael John Rengy Forster
Firm: Gardino
Title Plan
LT 496906
Approved on: 16/05/2016

Approved by Registrar-General of Land under No. 2002/6055

Easement instrument to grant easement or *profit à prendre*, or create land covenant

Sections 90A and 90F, Land Transfer Act 1952

EI 6878032.14 Easement
Cpy – 01/01, Pgs – 006, 15/06/06, 16:15
DocID: 411634582

Land registration district

WELLINGTON

Grantor *Surname(s) must be underlined.*

WHITBY COASTAL ESTATES LIMITED

Grantee *Surname(s) must be underlined.*

WHITBY COASTAL ESTATES LIMITED

Grant* of easement or *profit à prendre* or creation or covenant

The Grantor, being the registered proprietor of the servient tenement(s) set out in Schedule A, **grants to the Grantee** (and, if so stated, in gross) the easement(s) or *profit(s) à prendre* set out in Schedule A, **or creates** the covenant(s) **set out** in Schedule A, with the rights and powers or provisions set out in the Annexure Schedule(s). *Subject to Caveats ~~B777313.1 and~~ 5588621.1*

Dated this 11th day of March 2006

Attestation

DG Bradford *Director* **Signature [common seal] of Grantor**	**Signed in my presence by the Grantor** *Signature of witness* *Witness to complete in BLOCK letters (unless legibly printed)* **Witness name** Donna Marie Jensen **Occupation** Legal Executive **Address** WELLINGTON
DG Bradford *Director* **Signature [common seal] of Grantee**	**Signed in my presence by the Grantee** *Signature of witness* *Witness to complete in BLOCK letters (unless legibly printed)* **Witness name** Derek Maxwell Tait **Occupation** Solicitor **Address** Porirua

Certified correct for the purposes of the Land Transfer Act 1952.

[Solicitor for] the Grantee

*If the consent of any person is required for the grant, the specified consent form must be used.

REF: 7003 – AUCKLAND DISTRICT LAW SOCIETY

Approved by Registrar-General of Land under No. 2002/6055

Annexure Schedule 1

Easement instrument Dated 11th March 2006 Page ___ of ___ pages

Schedule A *(Continue in additional Annexure Schedule if required.)*

Purpose (nature and extent) of easement, *profit*, or covenant	Shown (plan reference)	Servient tenement (Identifier/CT)	Dominant tenement (Identifier/CT *or* in gross)
Water Drainage	O on DP 357271	232756	232757
	K on DP 357271	232759	232758
Sewage Drainage	H on DP 357271	232761	232762
	L on DP 357271	232759	232756
	N on DP 357271	232757	232758
Continued on Annexure Schedule			

Easements or *profits à prendre* rights and powers (including terms, covenants, and conditions)

Delete phrases in [ ] and insert memorandum number as required.
Continue in additional Annexure Schedule if required.

Unless otherwise provided below, the rights and powers implied in specific classes of easement are those prescribed by the Land Transfer Regulations 2002 and/or the Ninth Schedule of the Property Law Act 1952.

The implied rights and powers are **[varied] [negatived] [added to]** or **[substituted]** by:

[Memorandum number , registered under section 155A of the Land Transfer Act 1952].

[the provisions set out in Annexure Schedule 2].

Covenant provisions

Delete phrases in [ ] and insert memorandum number as required.
Continue in additional Annexure Schedule if required.

The provisions applying to the specified covenants are those set out in:

[Memorandum number , registered under section 155A of the Land Transfer Act 1952]

[Annexure Schedule 2].

All signing parties and either their witnesses or solicitors must sign or initial in this box

Approved by Registrar-General of Land under No. 1995/5004

Annexure Schedule

Insert below:-
"Mortgage", "Transfer", "Lease" etc.

[ ] dated 11th March 2002 page [ ] of [ ] pages

Continuation of Schedule ~~1~~ A

Purpose (nature and extent)	Shown (Plan Reference)	Servient tenement Identifier/CT	Dominant tenement Identifier/CT or in gross
Right of Way Water Supply Sewage and Stormwater Drainage, Electricity Gas Telecommunications and Computer Media	D on DP 357271	232756	232759 232760 232761 232762
	E on DP 357271	232759	232756 232760 232761 232762
	F on DP 357271	232760	232756 232759 232761 232762
	G on DP 357271	232761	232756 232759 232760 232762
	T and W on DP 357271	232773	232774 232775
	U and X on DP 357271	232774	232773 232775
	V and Y on DP 357271	232775	232773 232774
	Z on DP 357271	232771	232754 232772
	AA on DP 357271	232754	232771 232772
Water Drainage And Sewage Drainage	W on DP 357271	232773	232768 and 232769
	X on DP 357271	232774	232768 and 232769
	Y on DP 357271	232775	232768 and 232769
	Z on DP 357271	232771	232770
	AA on DP 357271	232754	232770

If this Annexure Schedule is used as an expansion of an instrument, all signing parties and either their witnesses or their solicitors must put their signatures or initials here.

Approved by Registrar-General of Land under No. 2003/6150

Annexure Schedule - Consent Form

Land Transfer Act 1952 section 238(2)

Insert type of instrument
"Caveat". "Mortgage" etc

Mortgage

Page [ ] of [ ] pages

Consentor *Surname must be underlined*	Capacity and Interest of Consentor *(eg. Caveator under Caveat no./Mortgagee under Mortgage no.)*
ANZ National Bank Limited	Mortgagee under Mortgage No. B808834.10

Consent

Delete Land Transfer Act 1952. if inapplicable, and insert name and date of application Act.
Delete words in [ ] if inconsistent with the consent.
State full details of the matter for which consent is required.

Pursuant to [section 238(2) of the Land Transfer Act 1952]

[section of the Act]

[Without prejudice to the rights and powers existing under the interest of the Consentor]

the Consentor hereby consents to: the registration of the within easement

Dated this 22nd day of March 2006

Attestation

ANZ National Bank Limited by its Attorney KAPUA KATRINA GARDINER Signature of Consentor	Signed in my presence by the Consentor Signature of Witness *Witness to complete in BLOCK letters (unless legibly printed)* Witness name JENNIFER ZHENG Occupation BANK OFFICER Address AUCKLAND

An Annexure Schedule in this form may be attached to the relevant instrument, where consent is required to enable registration under the Land Transfer Act 1952, or other enactments, under which no form is prescribed.

CERTIFICATE OF NON-REVOCATION OF POWER OF ATTORNEY

I, **Kapua Katrina Gardiner,** Manager Lending Services of Auckland in New Zealand hereby certifies that:

1. By Deed dated 28 June 1996 deposited in the Land Registry Offices situated at:

Auckland	as No.	D.016180	Hokitika	as No.	105147
Blenheim	as No.	186002	Invercargill	as No.	242542.1
Christchurch	as No.	A.256503.1	Napier	as No	644654.1
Dunedin	as No.	911369	Nelson	as No.	359781
Gisborne	as No.	G.210991	New Plymouth	as No.	433509
Hamilton	as No.	B.355185	Wellington	as No.	B.530013.1

The National Bank of New Zealand Limited appointed me its attorney with the powers and authorities specified in that Deed.

2. On 26 June 2004 The National Bank of New Zealand Limited was amalgamated with ANZ Banking Group (New Zealand) Limited to become ANZ National Bank Limited and the property being dealt with pursuant to the Deed has become the property of ANZ National Bank Limited (as the amalgamated company) under Part XIII of the Companies Act 1993.

3. At the date of this certificate, I am the Manager Lending Services, Auckland Lending Services Centre of The National Bank of New Zealand, part of the ANZ National Bank Limited.

4. At the date of this certificate, I have not received any notice or information of the revocation of that appointment by the winding-up or dissolution of the ANZ National Bank Limited or otherwise.

DATED at Auckland this 22nd day of March 2006

.....

Approved by Registrar-General of Land under No. 2003/6150

Annexure Schedule - Consent Form

Land Transfer Act 1952 section 238(2)

Insert type of instrument
"Caveat", "Mortgage" etc

Caveat

Page [ ] of [ ] pages

Consentor *Surname must be underlined*	Capacity and Interest of Consentor *(eg. Caveator under Caveat no./Mortgagee under Mortgage no.)*
Silverwood Forest Corporation Limited	Caveator under Caveat no. 5588621.1

Consent

Delete Land Transfer Act 1952. if inapplicable, and insert name and date of application Act.
Delete words in [ ] if inconsistent with the consent.
State full details of the matter for which consent is required.

Pursuant to [section 238(2) of the Land Transfer Act 1952]

[section of the Act]

[Without prejudice to the rights and powers existing under the interest of the Consentor]

the Consentor hereby consents to: the registration of the within easement

Dated this 16th day of May 2006

Attestation

Tiedemann & Partners
P O Box 84 101
Westgate - Auckland - New Zealand
phone 64 21 764 664
fax 6493602180 email pect@xtra.co.nz

Director Silverwood Forest Corporation Ltd

Signature of Consentor

Signed in my presence by the Consentor

Signature of Witness

Witness to complete in BLOCK letters (unless legibly printed)

Witness name JOHN BOULD

Occupation SURVEYOR

Address Harrison Grierson Consultants Ltd
P.O. Box 5760
Wellesley St Auckland

An Annexure Schedule in this form may be attached to the relevant instrument, where consent is required to enable registration under the Land Transfer Act 1952, or other enactments, under which no form is prescribed.

View Instrument Details

Instrument No.	10269524.24
Status	Registered
Date & Time Lodged	27 Nov 2015 16:45
Lodged By	Moore, George Donal Eisdell
Instrument Type	Easement Instrument

Affected Computer Registers	Land District
684456	Wellington
716691	Wellington
716692	Wellington
716693	Wellington
716694	Wellington
716695	Wellington
716696	Wellington
716697	Wellington
716698	Wellington
716699	Wellington
716700	Wellington
716701	Wellington
716702	Wellington
716703	Wellington
716704	Wellington
716705	Wellington

Annexure Schedule: Contains 5 Pages.

Grantor Certifications

I certify that I have the authority to act for the Grantor and that the party has the legal capacity to authorise me to lodge this instrument ☑

I certify that I have taken reasonable steps to confirm the identity of the person who gave me authority to lodge this instrument ☑

I certify that any statutory provisions specified by the Registrar for this class of instrument have been complied with or do not apply ☑

I certify that I hold evidence showing the truth of the certifications I have given and will retain that evidence for the prescribed period ☑

I certify that the Mortgagee under Mortgage 9440529.1 has consented to this transaction and I hold that consent ☑

I certify that the Mortgagee under Mortgage 9870401.1 has consented to this transaction and I hold that consent ☑

I certify that the Encumbrancee under Encumbrance 787992.22 has consented to this transaction and I hold that consent ☑

Signature

Signed by George Donal Eisdell Moore as Grantor Representative on 25/11/2015 12:43 PM

Grantee Certifications

I certify that I have the authority to act for the Grantee and that the party has the legal capacity to authorise me to lodge this instrument ☑

I certify that I have taken reasonable steps to confirm the identity of the person who gave me authority to lodge this instrument ☑

I certify that any statutory provisions specified by the Registrar for this class of instrument have been complied with or do not apply ☑

© Copyright: Land Information New Zealand

Grantee Certifications

I certify that I hold evidence showing the truth of the certifications I have given and will retain that evidence for the prescribed period ☑

Signature

Signed by George Donal Eisdell Moore as Grantee Representative on 25/11/2015 12:43 PM

***** End of Report *****

© *Copyright: Land Information New Zealand*

Form B

Easement instrument to grant easement or *profit à prendre*, or create land covenant

(Sections 90A and 90F Land Transfer Act 1952)

Grantor

Progeni Limited

Grantee

Todd Property Whitby Development Limited

Grant of Easement or *Profit à prendre* or Creation of Covenant

The **Grantor** being the registered proprietor of the servient tenement(s) set out in Schedule A ~~**grants to the Grantee** (and, if so stated, in gross) the easement(s) or *profit(s) à prendre* set out in Schedule A, **or**~~ **creates** the covenant(s) **set out** in Schedule A, with the rights and powers or provisions set out in the Annexure Schedule(s)

Schedule A

Continue in additional Annexure Schedule, if required

Purpose (Nature and extent) of easement; *profit* or covenant	Shown (plan reference)	Servient Tenement (Computer Register)	Dominant Tenement (Computer Register) or in gross
Land covenant	YA, YB, YC on DP 483876	Lot 1 DP 483876 (CFR 684456)	Lots 827, 852 – 864 and 900 (CFR 716691, 716692-716705)

Form B - continued

Easements or *profits à prendre* rights and powers (including terms, covenants and conditions)

Delete phrases in [ ] and insert memorandum number as required; continue in additional Annexure Schedule, if required

~~Unless otherwise provided below, the rights and powers implied in specified classes of easement are those prescribed by the Land Transfer Regulations 2002 and/or Schedule Five of the Property Law Act 2007~~

~~The implied rights and powers are hereby **[varied] [negatived] [added to]** or **[substituted]** by:~~

~~[Memorandum number _____, registered under section 155A of the Land Transfer Act 1952]~~

~~[the provisions set out in Annexure Schedule]~~

Covenant provisions

Delete phrases in [ ] and insert Memorandum number as required; continue in additional Annexure Schedule, if required

The provisions applying to the specified covenants are those set out in the **Annexure Schedule B**.

~~[Memorandum number ....., registered under section 155A of the Land Transfer Act 1952]~~

~~[Annexure Schedule]~~

Annexure Schedule

Insert instrument type

Land covenant

Continue in Additional Annexure Schedule(s), if required

ANNEXURE SCHEDULE B

BACKGROUND

A The Grantor is the registered proprietor of the Servient Land.

B The Grantee is the registered proprietor of the Dominant Land.

C The Grantor has agreed for the benefit of the Grantee not to plant any additional Exotic Trees on the Covenant Area (subject to the exceptions in this land covenant).

LAND COVENANTS

Definitions

1 In this instrument, unless the context otherwise requires:

Council means the Porirua City Council and/or the Greater Wellington Regional Council.

Covenant Area means that part of the Servient Land identified as areas YA, YB and YC on Deposited Plan 483876.

Dominant Land means the land described as the dominant tenement in Schedule A where such land is adjacent to the Covenant Area. For clarity, any lots which in the future do not adjoin the Covenant Area (for example as part of a future subdivision) are not to be included as Dominant Land.

Exotic Trees means plant species which are not indigenous to New Zealand.

Grantee means the registered proprietor for the time being of the Dominant Land.

Grantor means the registered proprietor for the time being of the Servient Land.

Servient Land means the land described as the servient tenement in Schedule A.

Territorial Authority means any local body, government, statutory or non-statutory authority having jurisdiction, or authority over, or in respect of, the construction, use or occupation of the Dominant Land or Servient Land.

General

2 The Grantor for itself and so as to bind the Servient Land, covenants and agrees with the Grantee for the benefit of the Dominant Land from time to time, that the Grantor shall always observe and perform all of the covenants set out in this instrument, to the end and intent that each of the covenants shall forever enure for

the benefit of the Dominant Land.

Exotic Trees

3 The Grantor shall not plant any Exotic Trees on the Covenant Area, unless:

(a) required to do so by any Territorial Authority or New Zealand Court; or

(b) such Exotic Tree has a typical height at maturity of less than five (5) metres;

and provided that:

(i) no Exotic Trees may be planted within ten (10) metres of the common boundary existing as at 28 October 2014 between the Grantor's land then comprising Lot 100 Deposited Plan 478324 (contained in certificate of title 664504) and the Grantee's land then comprising Lot 306 Deposited Plan 480048 (contained in certificate of title 671576); and

(ii) in the event that any Exotic Trees are planted on the Covenant Area and exceed five (5) metres in height (*Non-Compliant Trees*), the Grantor must trim such trees so that they do not exceed five (5) metres in height.

Non-Compliant Trees

4 If the Grantor fails to comply with the obligations in clause 3 then the Grantee may, no more than once in any calendar year, fell the Non-Compliant Trees provided that the requirements of clause (a) to (c) below are complied with.

(a) The Grantee shall provide notice in writing to the Grantor of its intention to fell Non-Compliant Trees (*Grantee's Notice*). The Grantee's Notice must specify a date and time on which the Grantee intends to enter the Servient Land for the purpose of identifying and, if necessary, marking the Non-Compliant Trees. The Grantee's Notice must be provided to the Grantor no less than 14 days prior to the date that the Grantee intends to access the Servient Land.

(b) The Grantee shall then provide to the Grantor a map which unambiguously identifies the Non-Compliant Trees which the Grantee intends to fell (*Detailed Notice*). The Grantor shall have 14 days from the date of the Detailed Notice to dispute the information within the Detailed Notice.

(c) If the Grantor does not give notice in writing to the Grantee disputing the Detailed Notice prior to the date being 14 days from the date of the Detailed Notice, the Grantee may fell the identified Non-Compliant Trees provided

that the Grantee gives a minimum of five (5) days' notice specifying the date that the Grantee will fell the Non-Compliant Trees. The Grantee will only be entitled to enter the Grantor's property on the notified dates.

Costs

5 The parties agree as follows in respect of Non-Complying Trees:

(a) Each party will pay their own costs for identifying Non-Compliant Trees pursuant to clauses 4(a) and 4(b) above;

(b) The Grantor will pay the Grantee's reasonable costs of felling the Non-Compliant Trees.

(c) The Grantee will pay any reasonable reparation costs claimed by the Grantor for any damage to property related to the felling or breach of health and safety regulations except the Grantor may not claim for damage to vegetation or for the removal of the Non-Compliant Trees.

Dispute Resolution

6 If any dispute arising between the parties in respect of this instrument and the dispute is not resolved by agreement within ten (10) working days of written notice by one party to the other of the dispute, either party may refer the dispute to arbitration before a sole arbitrator under the Arbitration Act 1996. If the parties are not able to agree on a sole arbitrator quickly, either party may ask the President for the time being of the New Zealand Law Society to appoint one.

View Instrument Details

Instrument No.	10394620.9
Status	Registered
Date & Time Lodged	11 May 2016 13:45
Lodged By	Judson, Kristy Maree
Instrument Type	Consent Notice under s221(4)(a) Resource Management Act 1991

Affected Computer Registers	Land District
732712	Wellington
732713	Wellington

Annexure Schedule: Contains 3 Pages.

Signature

Signed by Sara Helen Cheetham as Territorial Authority Representative on 11/05/2016 12:01 PM

***** End of Report *****

© Copyright: Land Information New Zealand

RC6773 – SL0019/16
Andrew Jones
ajones@pcc.govt.nz
(04) 237 3580

Office of the Registrar – General of Land
Land Registry Office

CONSENT NOTICE PURSUANT TO:
SECTION 221 OF THE RESOURCE MANAGEMENT ACT 1991

TO: Office of the Registrar – General of Land

In the Matter of a Consent Notice pursuant to Section 221 of the Resource Management Act 1991 in respect of a fee simple subdivision of Lot 900 DP 483876 and Lot 7 DP 43892 lodged for deposit under Plan No 496906.

I, Andrew Jones, Senior Resource Consents Planner of the Porirua City Council, hereby certify that the following conditions (which were condition no's 93, 95, 98, 99, 101, 102, 106, 108, 110, and 111 of the Subdivision RC6773), be complied with on an ongoing basis, was imposed by the Porirua City Council on 11 December 2014 giving consent to the subdivision described herein:

The consent holder and future owners of Lots 850-851 shall be aware that:

1. *All Building Site Development shall be undertaken in accordance with the requirements of the Statement of Suitability of Earthworks report titled "REPORT ON DEVELOPED LOTS 813-814, 817-826, & 828-851, LT 496906 Banks Boulevard, WHITBY ~ PCC RC 6773", prepared by Cardno dated 2 May 2016, held on Resource Consent file 6773. In particular, the following considerations and requirements shall be taken into account:*
   - *Constructed cut and fill batters should not be excavated or overfilled unless those excavations or filling have been inspected and designed by a Chartered Professional Engineer with suitable geotechnical experience;*
   - *The foundation excavations are taken down to firm material and not allowed to pond water;*
   - *Excavated fine grained soils shall be promptly covered with a suitable layer of topsoil or similar material contoured to prevent ponding of water;*
   - *Dwellings built on the certified fill should be of timber or steel frame construction supported on a continuous concrete foundation, have an exterior cladding not exceeding the maximum allowable for heavy wall cladding as defined by NZS 3604:2011 and be no more than two storeys in height unless the foundations are designed by a Chartered Professional Engineer;*
   - *This certification that the earthfills have been placed in compliance with the terms of NZS 4431 does not remove the necessity for the normal inspection and design of foundations as would be made in natural ground;*
   - *This certification also covers areas of the site in natural ground or cut surfaces as described in Section 2 of the report. The areas of cut and/or undisturbed natural ground within these lots is expected to meet the requirements of NZS 3604:2011 beneath the overlying topsoil layer. However, this certification does not remove the*

necessity for the normal inspection and design of foundations in accordance with the normal requirements of NZS 3604:2011 in these areas.

2. *All buildings on Lots 801, 802, 804, 805, 808, 811, 812, 815-818, 827, 828-834, 848-864 shall in addition to District Plan requirements (unless authorised by a relevant resource consent), comply with a height recession plane of 3 metres and 45 degrees from the road frontage boundary.*

3. *Any dwelling (excluding garage or parking building) on Lots 801, 802, 804, 805, 808, 811, 812, 815-817, 827, 828-834, 848-864 shall be setback a minimum distance of 3m from the road frontage boundary.*

4. *Any garage building (either attached to a dwelling or detached) or a carport or parking space for a residential dwelling on Lots 801, 802, 804, 805, 808, 811, 812, 815-817, 827, 828-834, 848-864 shall be setback a minimum distance of 5m from the road frontage boundary.*

5. *This subdivision includes the use of Low Impact Urban Design and Development principles for collection, treatment and disposal of stormwater. In particular, the public road design includes the use of rain gardens and drainage swales beside the road carriageway in front of these lots. In this respect, the developer has constructed a vehicle crossing in a nominated location and in a specific manner for each lot that accords with and maintains the functions of the stormwater system. Consequently, the owner of each lot must maintain the vehicle crossing in its existing location. As such the design of any future buildings and parking areas of these lots must only utilise the nominated vehicle crossing or access lot. No additional vehicle crossings shall be constructed for these lots.*

6. *Any development on Lots 846, 847 & 850-1 located in the Rural Zone shall be subject to the provisions of the District Plan Suburban Zone (Suburban Zone Objectives & Policies, Suburban Zone Rules & Permitted Activity Standards) and not the provisions of the District Plan Rural Zone (Rural Zone Objectives & Policies, Rural Zone Rules & Permitted Activity Standards)*

7. *Bare galvanised, zinc alum or unpainted metal that would lead to contamination of stormwater runoff upon corrosion is not to be used for roofing or building materials.*

8. *No structures or buildings (except network utilities) with a footprint of more than $10m^2$ may be located on Lots 850 and 851 within 12m of the centreline of the National Grid transmission line (shown as areas ZI, ZZ, ZH & ZG on the land transfer plan).*

9. *All buildings structures and earthworks on lots 806, 807, 810. 813, 814, 817-823, 825, 826, 828, 829, 847, and 849-853 and any reserves adjacent to or under the National Grid Transmission Line shall comply with the New Zealand Electrical Code of Practice for Electrical Safe Distances (NZCECP34:2001) or any subsequent revision of the Code.*

10. *All trees and vegetation on Lots 806, 807, 810. 813, 814, 817-823, 825, 826, 828, 829, 847, and 849-853, including any initial planting on reserves, must be selected and located so that they do not come within 5m of the conductors (wires) at any time; including at their mature height.*

PURSUANT TO Section 221(4)(b) of the Resource Management Act 1991, these conditions are to be registered as a covenant running with the land under the Land Transfer Act 1952.

Dated at Porirua this 6th day of May 2016.

Yours faithfully

Andrew Jones
SENIOR RESOURCE CONSENTS PLANNER

MEMORANDUM FROM LICENSED BUILDING PRACTITIONER: CERTIFICATE OF DESIGN WORK

Porirua City Council
Approved Consent Document
24 NOV 2017
0560/17
BCA Number
David Nolan
on behalf of Porirua City Council

1. Where is the building? *Complete this field*

Street address of building:	53 Banks Boulevard, Waikanae Beach
Building consent number:	

2. Who owns the building? *Complete all fields, using N/A if a field is not applicable*

Owner name:	DAVID TIMMINS	Title: e.g. Mr, Mrs, Ms, Dr	MR
Owner email address:	DAVETIMMINS@OUTLOOK.COM		
Owner contact number:	0226580325		
Owner mailing address:	146 KAHU ROAD, PAREMATA, PORIRUA, 5024		

3. What work have you carried out/supervised? *Complete as appropriate*

I carried out/supervised the following design work that is restricted building work:

	Design Work that is restricted building work *Tick as applicable or enter N/A*				Description of restricted building work	Carried out/ supervised	Reference to plans/ specifications
					Complete these fields if the previous column is ticked Yes		
Primary structure	☐	Yes	☐	N/A			
Foundations/ subfloor framing	☑	Yes	☐	N/A	Upper floor joists and slabs	✓	A1-02 A1-03
Walls	☑	Yes	☐	N/A	To N2S3604	✓	A1-04,05
Roof	☑	Yes	☐	N/A	Rafter	✓	A1-07
Columns/beams	☑	Yes	☐	N/A	lintels to N2S3604	✓	A1-16
Bracing	☐	Yes	☐	N/A			
Other	☐	Yes	☐	N/A			
External moisture management systems	☐	Yes	☐	N/A			
Damp proofing	☑	Yes	☐	N/A	Retaining wall tanking	✓	A1-04
Roof cladding or roof cladding system	☑	Yes	☐	N/A	MC700		A1-08

Ventilation system (for example, subfloor or cavity)	☑	Yes	☐	N/A	Mechanical ventilation to Bathrooms	✓	A1-06
Wall cladding or wall cladding system	☑	Yes	☐	N/A	Weatherboard & brick	✓	A1-04
Waterproofing	☑	Yes	☐	N/A	Retaining wall	✓	A1-04
Other	☐	Yes	☐	N/A			
Fire safety systems	☐	Yes	☐	N/A			
Emergency warning systems, evacuation and fire service operation systems, suppression, control systems, or other	☐	Yes	☐	N/A			

Note: The design of fire safety systems is only restricted building work when it involves small-to-medium apartment buildings as defined by the Building (Definition of Restricted Building Work) Order 2011.

Are waivers or modifications of the building code required?	☐	Yes	☐	No

If Yes, please provide details including relevant code clauses

4. What are your details? *Complete all fields, using N/A if a field is not applicable*

Licensed Building Practitioner name:	Aaran Judd	Licensed Building Practitioner number:	108509
Registered Architect number		Chartered Professional Engineer number:	
Mailing address:	583 Parenata Haywards Road		
Street address or registered office:	RD1 Porirua		
Contact number:	2377919		
Email address:	aartradesign@xtra.co.nz		

5. Declaration

I, Aaron Judd *(name of Licensed Building Practitioner)* ~~certify~~ state that the design work that is restricted building work recorded on this form—

(a) complies with the building code; or

(b) complies with the building code subject to any waiver or modification of the building code recorded on this form

Signature:	
Date:	10/7/17

You can add a digital signature to this document, either using Adobe or your existing digital signature.

Once you have filled out the form, including signatures, please save the application to your computer. You can then submit the application with supporting documentation to your local council.

If you are unsure about what information to include in your application, a guidance document is available (click here).

DESIGN CERTIFICATE

Technical basis for structural design methodology contained in designIT for houses - New Zealand.

designIT for houses, New Zealand has been developed by experienced timber engineers to assist designers in selecting appropriate sizes of structural laminated veneer lumber products manufactured by Carter Holt Harvey (including hySPAN, hy90, hyONE and hyJOIST) and other generic stress grades of timber, to be used as structural elements for the construction of buildings that fall within the scope of NZS 3604.

The design methodology used for the software complies with the loading and general design requirements contained within AS/NZS 1170 and with timber structural design in accordance with NZS 3603:1993 including Amendment 4 (Verification method B1/VM1, 6.1).

designIT relies on the accurate input of span and loading information by the user. Where accurate inputs are submitted the product and/or stress grade and the size given will comply with the structural requirements of the New Zealand Building Code (NZBC), provided the installation is in accordance with the installation requirements provided by designIT and/or in product literature and/or NZS 3604, or specific engineering design, as appropriate.

Futurebuild LVL and Laserframe components, when used and treated to the required treatment levels prescribed in NZS 3602 and NZS 3604, as modified by Acceptable Solution B2/AS1, will comply with the requirements of the NZBC (Acceptable Solution B2/AS1, 3.2).

References:

NZS 3603:1993 Timber Structures Standard.

NZS 3604:2011 Timber-framed buildings.

AS 1720.1:2010 Timber structures. Part 1: Design methods.

AS 1720.3:2016 Timber structures. Part 3: Design criteria for timber-framed residential buildings

AS/NZS 1170:2002 Structural design actions, Parts 0 and 1.

AS/NZS 1170:2011 Structural design actions, Part 2: Wind actions.

AS/NZS 1170:2003 Structural design actions, Part 3: Snow and ice actions.

This Design Certificate, and any associated warranty/certification, is void where there has been substitution of alternate products not detailed within the Member Specification.

Porirua City Council
Approved Consent Document

24 NOV 2017

056017
BCA Number
David Nolan
On behalf of Porirua City Council

Version date: 3 May 2017

For further information or advice contact:
Carter Holt Harvey Woodproducts New Zealand,
173 Captain Springs Road, Onehunga. Auckland
Telephone: 0800 808 131
Facsimilie: 0800 808 132
Email: designit@chhwoodproducts.co.nz
Web: http://www.chhwoodproducts.co.nz

Specifier details:

Specifier:	Aaran Judd
Business name:	Aartra
Address:	583 Paremata Haywards Road
Email:	aartradesign@xtra.co.nz

Project & site details:

Project:	Timmins House
Reference:	1716
At (address):	53 Banks Boulavard
For (owner/s):	Dave and Josie
Design wind zone	High
Snow loading	Design snow zone: N0

MEMBER DESIGN DETAILS

Member 1

1) Member code and description R1 - Common rafters

2) Date prepared 25 May 2017

3) Serviceability criteria AS 1720.1: 2010 and AS 1720.3: 2016

4) Design inputs

Span	4.2 m - single span
Rafter spacing	600 mm
Roof mass	20 kg/m²
Lateral restraint condition	Bottom edge restrained by ceiling/ceiling battens at 600 crs max.
Overhang	600 mm

5) Member specification

Size, stress grade/product	Use 150 x 45 hySPAN
Material type	Structural Laminated Veneer Lumber to AS/NZS 4357

6) Serviceability

Load case	Limit[3] on average deflection[2]	Estimated average deflection[2]	Rigidity ratio[4]
Long term load - $G + \Psi_L Q^*$	14.0 mm	7.9 mm (long term)	1.8
Live load - $\Psi_s Q$	16.8 mm	3.6 mm	4.6
Live load - $\Psi_s Q$	16.8 mm	7.5 mm	2.2
Wind load - W_s	28.0 mm	10.9 mm	2.6
Overhang			
Long term load - $G + \Psi_L Q^*$	10.0 mm	-6.2 mm (long term)	-

*Critical serviceability load case
See 'Notes for interpretation of serviceability data' at the end of this report

7) Reactions

		Limit States Design Reaction[2,3]
Load case	k_1[1]	End kN[4]
1.35G	0.60	-0.6
1.2G + 1.5Q	0.80	-2.4
$1.2G + W_u + \Psi_c Q$	1.00	-1.7
$0.9G + W_u$	1.00	1.8

See 'Notes for interpretation of reaction data' at the end of this report

8) Installation requirements

- Rafter overhang - 600 mm ok with birdsmouth notch not exceeding D/3 and minimum bearing at overhang support, 35 mm
- Minimum bearing - end supports, 30 mm.

Member 2

1) Member code and description L1 - Lintels - In single or upper storey load bearing walls

2) Date prepared 10 July 2017

3) Serviceability criteria AS 1720.1: 2010 and AS 1720.3: 2016

4) Design inputs

Span	4.8 m
Roof load width 'RLW'	3.5 m
Roof type and mass	Light roof and ceiling - 40 kg/m²

Nominal wall thickness	90 mm

5) Member specification

Size, stress grade/product	Use 400 x 90 hy90
Material type	Structural Laminated Veneer Lumber to AS/NZS 4357

6) Serviceability

Load case	Limit[3] on average deflection[2]	Estimated average deflection[2]	Rigidity ratio[4]
Long term load - $G + \Psi_L Q^*$	10.0 mm	4.8 mm (long term)	2.1
Live load - $\Psi_s Q$	15.0 mm	1.3 mm	11.7
Wind load - W_s	24.0 mm	3.9 mm	6.2

*Critical serviceability load case
See 'Notes for interpretation of serviceability data' at the end of this report

7) Reactions

		Limit States Design Reaction[2,3]
Load case	k_1[1]	End kN[4]
1.35G	0.60	-5.2
1.2G + 1.5Q	0.80	-7.8
$1.2G + W_u + \Psi_c Q$	1.00	-10.8
$0.9G + W_u$	1.00	6.3

See 'Notes for interpretation of reaction data' at the end of this report

8) Installation requirements

- Provide at least 30 mm bearing at end supports

Notes for interpretation of serviceability data

1. 'average deflection' is an engineering concept based upon a notional estimated load, notional member rigidity and, in some cases, an approximate model of material response to environmental conditions. These parameters are, 'standardised' in AS 1170 and AS 1720. Deflections calculated using this methodology cannot therefore be usefully compared with deflections calculated using other methods, eg GLTAA design methodology.

2. Deflection is the flexural response to load 'out-of-level' measurements of installations are not necessarily deflections and can incorporate 'initial out-of-straightness', whether intended or not. Furthermore, loads can be higher/lower than the notional estimate and in any comparison with measured levels, material variability needs to also be considered. AS 1720 gives the following basis for estimation of upper bound deflections for various materials.

No 1 Framing – visually graded to NZS 3631	Average + 100%
SG grades - mechanically graded to AS/NZS 1748	Average + 43%
GL grades for glulam to AS 1328	Average + 33%
LVL to AS/NZS 4357 (includes hySPAN and hyJOIST)	Average +18%

As can be seen, comparison of the 'average deflection' for different materials, even if calculated on the same basis, does not give the whole picture!

3. The limits referred are those specified in AS 1720.3 for the stated load case.

4. 'Rigidity ratio' expresses the rigidity of the specified beam relative to the rigidity of a notional beam just meeting the serviceability requirements of AS 1720.3

Notes for interpretation of reaction data

1. Duration of load factor 'k_1' for strength as per NZ 3603:1993
2. Negative (-) reactions relate to the 'gravity' or 'downwards' force on the support
3. Positive reactions relate to the 'upwards' forces or 'tie-down' requirement on the support
4. End reaction includes allowance for overhang/cantilever where one has been designed

Detail H12: Rafter Overhang

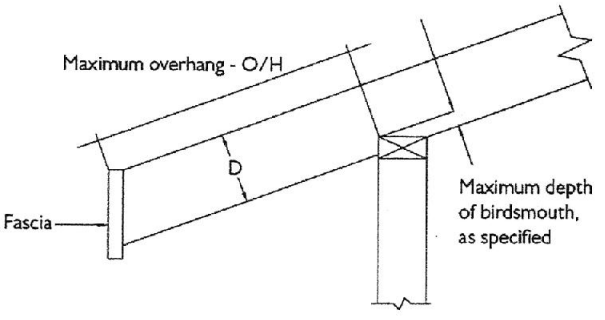

Building Code Clause(s) B1

PRODUCER STATEMENT – PS1 – DESIGN

(Guidance notes on the use of this form are printed on page 2)

Porirua City Council
Approved Consent Document
24 NOV 2017
0560/17
BCA Number
David Nolan
On behalf of Porirua City Council

ISSUED BY: Dave White
(Design Firm)

TO: Dave and Josie Timmins
(Owner/Developer)

TO BE SUPPLIED TO: Porirua City Council
(Building Consent Authority)

IN RESPECT OF: New house and retaining walls
(Description of Building Work)

AT: 53 Banks Boulevard, Whitby
(Address)

..... **LOT**..... **DP**..... **SO** .....

I have been engaged by the owner/developer referred to above to provide structural engineering design services in respect of the requirements of Clause B1 Structure of the Building Code for:

All ☐ or Part only ☑ (as specified in the attachment to this statement), of the proposed building work.

The design carried out by me has been prepared in accordance with:

☑ Compliance Documents issued by the Ministry of Business, Innovation & Employment, or
(verification method / acceptable solution)

☐ Alternative solution as per the attached schedule.....

The proposed building work covered by this producer statement is described on the sketches titled 53 Banks Boulevard structural details and numbered 1721/SK1 to SK8;

On behalf of the Design Firm, and subject to:

(i) Site verification of the following design assumptions ultimate ground bearing pressure greater than 300kPA and soil shear strength (□) of 30 degrees or better, and

(ii) All proprietary products meeting their performance specification requirements;

I **believe on reasonable grounds** that a) the building work described above, if constructed in accordance with the drawings, specifications, and other documents I have issued and listed in the attached schedule, will comply with the relevant provisions of the Building Code and that b), the person who has undertaken the structural design has the necessary competency to do so. I also recommend the following level of construction monitoring/observation:

☐CM1 ☐CM2 ☑CM3 ☐CM4 ☐CM5 (Engineering Categories) or ☐ as per agreement with owner/developer (Architectural)

I, Dave White am: ☑ CPEng # 65909
(Name of Design Professional)

I am a Member of :☑ IPENZ ☐ NZIA and hold the following qualifications BE, BSc, FNZIOB. The Design Firm issuing this statement holds a current policy of Professional Indemnity Insurance no less than $200,000*.

The Design Firm is a member of ACENZ: ☐

SIGNED BY Dave White ON BEHALF OF Dave White
(Design Firm)

Date: 2 July 2017 (signature)... .....

Note: This statement shall only be relied upon by the Building Consent Authority named above. Liability under this statement accrues to the Design Firm only. The total maximum amount of damages payable arising from this statement and all other statements provided to the Building Consent Authority in relation to this building work, whether in contract, tort or otherwise (including negligence), is limited to the sum of $200,000.*

This form is to accompany **Form 2 of the Building (Forms) Regulations 2004** for the application of a Building Consent.

GUIDANCE ON USE OF PRODUCER STATEMENTS

Producer statements were first introduced with the Building Act 1991. The producer statements were developed by a combined task committee consisting of members of the New Zealand Institute of Architects, Institution of Professional engineers New Zealand, Association of Consulting Engineers New Zealand in consultation with the Building Officials Institute of New Zealand. The original suit of producer statements has been revised at the date of this form as a result of enactment of the Building Act (2004) by these organisations to ensure standard use within the industry.

The producer statement system is intended to provide Building Consent Authorities (BCAs) with reasonable grounds for the issue of a Building Consent or a Code Compliance Certificate, without having to duplicate design or construction checking undertaken by others.

PS1 Design Intended for use by a suitably qualified independent design professional in circumstances where the BCA accepts a producer statement for establishing reasonable grounds to issue a Building Consent;

PS2 Design Review Intended for use by a suitably qualified independent design professional where the BCA accepts an independent design professional's review as the basis for establishing reasonable grounds to issue a Building Consent;

PS3 Construction Forms commonly used as a certificate of completion of building work are Schedule 6 of NZS 3910:2013 or Schedules E1/E2 of NZIA's SCC 2011[2]

PS4 Construction Review Intended for use by a suitably qualified independent design professional who undertakes construction monitoring of the building works where the BCA requests a producer statement prior to issuing a Code Compliance Certificate.

This must be accompanied by a statement of completion of building work (Schedule 6).

The following guidelines are provided by ACENZ, IPENZ and NZIA to interpret the Producer Statement.

Competence of Design Professional

This statement is made by a Design Firm that has undertaken a contract of services for the services named, and is signed by a person authorised by that firm to verify the processes within the firm and competence of its designers.

A competent design professional will have a professional qualification and proven current competence through registration on a national competence based register, either as a Chartered Professional Engineer (CPEng) or a Registered Architect.

Membership of a professional body, such as the Institution of Professional Engineers New Zealand (IPENZ) or the New Zealand Institute of Architects (NZIA), provides additional assurance of the designer's standing within the profession. If the design firm is a member of the Association of Consulting Engineers New Zealand (ACENZ), this provides additional assurance about the standing of the firm.

Persons or firms meeting these criteria satisfy the term "suitably qualified independent design professional".

***Professional Indemnity Insurance**

As part of membership requirements, ACENZ requires all member firms to hold Professional Indemnity Insurance to a minimum level.

The PI Insurance minimum stated on the front of this form reflects standard, small projects. If the parties deem this inappropriate for large projects the minimum may be up to $500,000.

Professional Services during Construction Phase

There are several levels of service which a Design Firm may provide during the construction phase of a project (CM1-CM5 for Engineers[3]). The Building Consent Authority is encouraged to require that the service to be provided by the Design Firm is appropriate for the project concerned.

Requirement to provide Producer Statement PS4

Building Consent Authorities should ensure that the applicant is aware of any requirement for producer statements for the construction phase of building work at the time the building consent is issued as no design professional should be expected to provide a producer statement unless such a requirement forms part of the Design firm's engagement.

Attached Particulars

Attached particulars referred to in this producer statement refer to supplementary information appended to the producer statement.

Refer Also:

1 Conditions of Contract for Building & Civil Engineering Construction NZS3910:2013

2 NZIA Standard Conditions of Contract SCC2011

3 Guideline on the Briefing & Engagement for Consulting Engineering Services (ACENZ/IPENZ 2004)

4 PN Guidelines on Producer Statements

www.acenz.org.nz
www.ipenz.org.nz
www.nzia.co.nz

SCHEDULE OF STRUCTURAL DESIGN WORK:

- Timber retaining walls
- Masonry retaining walls
- Foundation walls
- Bracing
- Portal frame
- Steel and timber beams

Memorandum from licensed building practitioner: Certificate of design work

Section 45 and section 30C, Building Act 2004

Please fill in the form as fully and correctly as possible.

If there is insufficient room on the form for requested details, please continue on another sheet and attach the additional sheet(s) to this form.

Porirua City Council
Approved Consent Document
24 NOV 2017
0560/17
BCA Number
David Nolan
On behalf of Porirua City Council

THE BUILDING	
Street address: 53 Banks Boulevard	
Suburb: Whitby	
Town/City: Porirua	Postcode: 5024

THE OWNER(S)	
Name(s): Dave and Josie Timmins	
Mailing address:	
Suburb:	PO Box/Private Bag:
Town/City:	Postcode:
Phone number:	Email address:

BASIS FOR PROVIDING THIS MEMORANDUM

I am providing this memorandum in my role as the: Please tick the option that applies ✓

○	**sole** designer of all of the RBW design outlined in this memorandum – I carried out all of the RBW design work myself – no other person will be providing any additional memoranda for the project
○	**lead** designer who carried out some of the RBW design myself but also supervised other designers – this memorandum covers their RBW design work as well as mine, and **no other** person will be providing any additional memoranda for the project
○	**lead** designer for all but specific elements of RBW – this memorandum only covers the RBW design work that I carried out or supervised and the **other** designers will provide their own memorandum relating to their specific RBW design
◉	**specialist** designer who carried out specific elements of RBW design work as outlined in this memorandum – other designers will be providing a memorandum covering the remaining RBW design work

IDENTIFICATION OF DESIGN WORK THAT IS RESTRICTED BUILDING WORK (RBW)

I Dave White carried out / supervised the following design work that is restricted building work

PRIMARY STRUCTURE: B1

Design work that is RBW	Description of RBW	Carried out or supervised	Reference to plans and specifications
Tick ✓ if included. Cross ✗ if excluded	If appropriate, provide details of the RBW	Tick ✓ whether you carried out this design work or supervised someone else carrying out this design work	If appropriate, specify references
All RBW design work relating to B1 ○		○ Carried out ○ Supervised	
Foundations and subfloor framing ◉	Part only as described in my calculations and sketches	● Carried out ○ Supervised	

Design work that is RBW	Description of RBW	Carried out or supervised	Reference to plans and specifications
Tick ✓ if included. Cross ⊗ if excluded	If appropriate, provide details of the RBW	Tick ✓ whether you carried out this design work or supervised someone else carrying out this design work	If appropriate, specify references
Walls ○		○ Carried out ○ Supervised	
Roof ○		○ Carried out ○ Supervised	
Columns and beams ◉	Part only as described in my calculations and sketches	● Carried out ○ Supervised	
Bracing ◉	Part only as described in my calculations and sketches	● Carried out ○ Supervised	
Other ◉	Retaining walls as described in my sketches and calculations	● Carried out ○ Supervised	

Design work that is RBW	Description of RBW	Carried out or supervised	Reference to plans and specifications
Tick ✓ if included. Cross ⊗ if excluded	If appropriate, provide details of the RBW	Tick ✓ whether you carried out this design work or supervised someone else carrying out this design work	If appropriate, specify references
EXTERNAL MOISTURE MANAGEMENT SYSTEMS: E2			
All RBW design work relating to E2 ○		○ Carried out ○ Supervised	
Damp proofing ○		○ Carried out ○ Supervised	
Roof cladding or roof cladding system ○		○ Carried out ○ Supervised	
Ventilation system (for example, subfloor or cavity) ○		○ Carried out ○ Supervised	
Wall cladding or wall cladding system ○		○ Carried out ○ Supervised	
Waterproofing ○		○ Carried out ○ Supervised	
Other ○		○ Carried out ○ Supervised	

Design work that is RBW	Description of RBW	Carried out or supervised	Reference to plans and specifications
Tick ✓ if included. Cross ✗ if excluded	If appropriate, provide details of the RBW	Tick ✓ whether you carried out this design work or supervised someone else carrying out this design work	If appropriate, specify references
FIRE SAFETY SYSTEMS: C1 - C6			
Emergency warning systems Evacuation and fire service operation systems ○ Suppression or control systems Other		○ Carried out ○ Supervised	

Note: The design of fire safety systems is only restricted building work when it involves small-to-medium apartment buildings as defined by the Building (Definition of Restricted Building Work) Order 2011.

WAIVERS AND MODIFICATIONS

Waivers or modifications of the Building Code are required. ○ Yes ◉ No

If Yes, provide details of the waivers or modifications below:

Clause	Waiver/modification required
List relevant clause numbers of building code	Specify nature of waiver or modification of building code required

ISSUED BY

Name and contact details of the licensed building practitioner who is licensed to carry out or supervise design work that is restricted building work.

Name: Dave White	LBP or Registration number: 65909
The practitioner is a: ○ Design LBP ○ Registered architect ◉ Chartered professional engineer	
Design Entity or Company (optional):	
Mailing address (if different from below):	
Street address/Registered office:	
Suburb: Whitby	Town/City: Porirua
PO Box/Private Bag: 58037	Postcode: 5245
Phone number:	Mobile: 0274 998 631
After hours:	Fax:
Email address: the.engineer@xtra.co.nz	Website:

DECLARATION

I Dave White LBP, state that I have applied the skill and care reasonably required of a competent design professional in carrying out or supervising the Restricted Building Work (RBW) described in this form, and that based on this, I also state that the RBW:

- Complies with the building code, or
- Complies with the building code subject to any waiver or modification of the building code recorded on this form

Signature: Dave White

Digitally signed by Dave White
DN: cn=Dave White, o=Dave White - engineer, ou, email=the.engineer@xtra.co.nz, c=NZ
Date: 2017.07.02 11:08:44 +12'00'

Date: 2/7/17

DAVE WHITE Chartered Professional Engineer	53 BANKS BOULEVARD	PAGE DATE ENG JOB NO.	1 19/6/17 DW 1721

The following calculations are for a proposed house at 53 Banks Boulevard, Whitby. Please direct any queries regarding these calculations to Dave White ph. 477 7187.

Timber Retaining Walls.

Retained height = 2.8m.
Assumed soil properties $\phi = 30° \rightarrow K_a = 0.33$

$\gamma = 18 kN/m^3 \rightarrow P_a = 0.5 \times 0.33 \times 18 \times 2.8^2 = 23.3 kN$ per m

Refer to attached print out.

2.8m RETAINING WALL
300 ϕ SED POSTS AT 900 CRS
190×45 LAGGING
450 ϕ 2.4m PILES
REFER TO SK1.

Porirua City Council
Approved Consent Document
24 NOV 2017
0560/17
BCA Number
David Nolan
On behalf of Porirua City Council

Cantilevered Masonry Walls.

$P_a = 0.5 \times 0.33 \times 18 \times 2.6^2 = 20.1$ kN per m

$M^* = 0.6 \times \frac{1}{3} \times 20.1 \times 2.6 = 29.0$ kNm per m.

Y D16 - 200, 50 cover $\rightarrow$ 29.8 kNm per m OK

footing: overturning moments = 0.6×29.0 = 17.4 kNm per m.

for 1750×250 footing: righting moments = $20 \times 0.2 \times 2.6 \times 1.65 + 0.5 \times 24 \times 0.25 \times 1.75^2$

= 26.3 kNm per m

$\rightarrow f_{o/t} = 26.3/17.4 = 1.5$ OK

2.6m MASONRY - CANTILEVERED WALL
D16-200, 50 COVER
1750×250 FOOTING
REFER TO SK2.

Retaining Wall Calculations for 53 Banks Boulevard, Whitby 15/07/2017

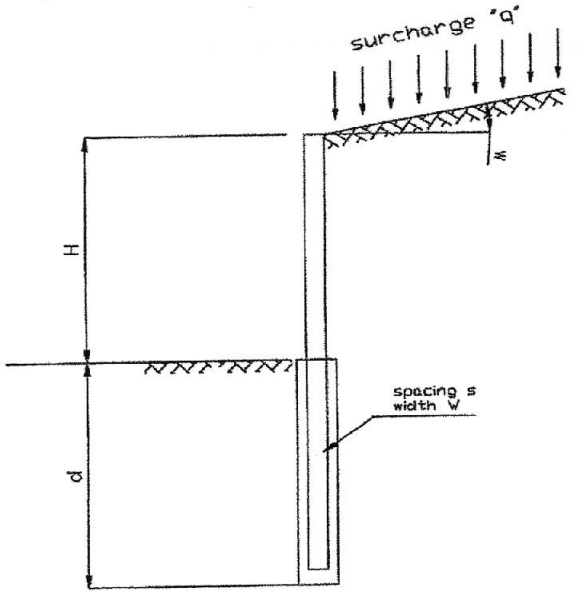

Design parameters:

Retained height H =	**3.3 m**
Spacing s =	**0.9 m**
Footing depth d =	**2.80 m**
Pile diameter =	**0.50 m**
soil density γ =	18.0 kN/m^3
angle of shearing resistance Ø =	30.0 °
backfill slope ω =	0.0 °
surcharge q =	**0.0 kN/m^2**
slope of back of wall β =	0.0 °

Soil pressures:

Equivalent height of surcharge h_e =	0.00 m
Active coefficient K_a =	0.33
Active presssure P_a =	29.4 kN per spacing "s"
Ultimate overturning moment M* =	53.9 kNm per spacing "s"
Passive coefficient Kp =	3.00
Passive presssure Pp =	117.6 kN per spacing "s"

Pile design:

coeff =	14.52
s =	310 medium clay
pile capacity =	61.4 kNm **OK**

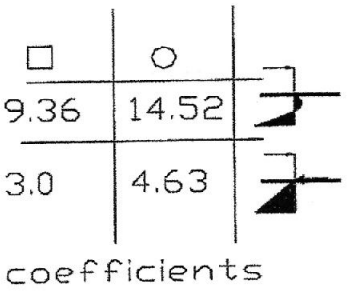

Pole design:

pole diameter =	**0.350 m**
strength reduction factor Ø =	0.80
duration of load factor k_1 =	0.60
peeling factor k_{20} =	0.85
steaming factor k_{21} =	0.85
dry use factor k_{22} =	1.00
characteristic bending stress f_b =	38 MPa
z =	4.2E-3 m^3
ØM_n =	55.5 kNm **OK**

Lagging design:

maximum ground pressure =	19.80 kPa
lagging width =	**0.19 m**
lagging thickness =	**0.07 m**
W* =	6.27 kN/m
M* =	0.423 kNm
strength reduction factor Ø =	0.80
duration of load factor k_1 =	0.60
characteristic bending stress f_b =	11.7 MPa
z =	155.2E-6 m^3
ØM_n =	0.871 kNm **OK**

Pinned Masonry Wall

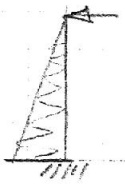

$M^* = \frac{1}{0.6} \times 0.0596 \times 20.1 \times 2.6^2 = 13.5$ kNm per m

D12-400, 50 cover → 18.6 kNm per m OK

2.6m PINNED MASONRY WALL
D12-400, 50 COVER NF
REFER TO SK3.

Foundation Wall

$P_a = 0.5 \times 0.33 \times 18 \times 0.9^2 = 2.41$ kN per m.

$M^* = \frac{1}{0.6} \times \frac{1}{3} \times 2.41 \times 0.9 = 1.21$ kNm per m

for YD12, 150mm block

→ 50 kNm per m. OK

footing: overturning moment: $0.6 \times 1.21 = 0.73$ kNm per m.

for 500×250 footing:

righting moment. $20 \times 0.15 \times 0.9 \times 0.4 + 24 \times 0.25 \times 0.5 \times 0.9^2$

$= 3.5$ kNm per m. OK

FOUNDATION WALL
150mm BLOCK
D12-400 CENTRAL
500×250 FOOTING
REFER TO SK4.

Bracing

wind speed = high (PCC website)

refer to attached calculations ....

25/06/2017

BRACING DEMAND CALCULATIONS FOR
53 BANKS BOULEVARD, WHITBY

Wind region:	**R2**	Earthquake zone:	**A**
Lee zone:	**no**	Subfloor cladding:	**nil**
Ground roughness:	**urban**	Lower storey cladding:	**light**
Site exposure:	**sheltered**	Top storey cladding:	**light**
Formation:	**hill**	Roof cladding:	**light**
Topographic zone:	**outer**	Slab on grade:	**yes**
Gradient:	**moderate**	Roof pitch:	**0-25°**
Topographic class:	**T3**		
Wind zone:	**H**		
Height to apex (H):	**7.0** m		
Roof height (h):	**1.0** m		

Porirua City Council
Approved Consent Document
24 NOV 2017
0560/17
BCA Number
David Nolan
On behalf of Porirua City Council

	lower level	upper or single level	
Building width:	16.8 m	16.8 m	gabled end
Building length:	6.5 m	6.5 m	gabled end
Building area:	132.0 m^2	99.0 m^2	

Single storey stud	**2.4** m
Lower storey stud	**2.4** m

Wind Bracing Demand:		**total**
Foundation bracing across:	- BU's/m	**-** BU's
Foundation bracing along:	- BU's/m	**-** BU's
Single storey bracing across:	49 BU's/m	**319** BU's
Single storey bracing along:	49 BU's/m	**823** BU's
Lower storey bracing across:	154 BU's/m	**1001** BU's
Lower storey bracing along:	154 BU's/m	**2587** BU's

Earthquake Bracing Demand:		**total**
Foundation bracing:	- BU's/m^2	- BU's
Lower storey bracing:	9.9 BU's/m^2	**1307** BU's
Single or upper storey bracing:	5.6 BU's/m^2	**554** BU's

02/08/2017

BRACING CALCULATIONS FOR 53 BANKS BOULEVARD, WHITBY

LOWER STOREY

WEST - EAST BRACING

Grid	Element	Type	Length (m)	Wall height (m)	Wind rating BU's/m	Factored wind rating BU's/m	Wind bracing provided	Seismic rating BU's/m	Factored seismic rating BU's/m	Seismic bracing provided BU's
1	1a	GS1-N.	2.80	2.70	70	62	174	60	53	149
	1b	GS1-N.	1.60	2.70	70	62	100	60	53	85
2	2a	GS1-N.	2.80	2.40	70	70	196	60	60	168
	2b	GS1-N.	2.10	2.40	70	70	147	60	60	126
3	3a	GS1-N.	4.00	2.40	70	70	280	60	60	240
4	4a	-	1.10	2.40	0	0	0	0	0	0
	4b	GS1-N.	2.20	2.70	70	62	137	60	53	117
	4c	GS1-N.	2.30	2.40	70	70	161	60	60	138
5	5a	-	1.10	2.70	0	0	0	0	0	0
	5b	GS1-N.	4.00	2.70	70	62	249	60	53	213
6	6a	GS1-N.	1.90	2.70	70	62	118	60	53	101
	6b	GS1-N.	1.70	2.70	70	62	106	60	53	91
		-		2.40	0	0	0	0	0	0
		-		2.40	0	0	0	0	0	0
		-		2.40	0	0	0	0	0	0
		-		2.40	0	0	0	0	0	0
		-		2.40	0	0	0	0	0	0
		-		2.40	0	0	0	0	0	0
		-		2.40	0	0	0	0	0	0
		-		2.40	0	0	0	0	0	0

Bracing capacity: **1668 BU's** **1429 BU's**

Bracing demand: **1001 BU's** **1307 BU's**

NORTH - SOUTH BRACING

Grid	Element	Type	Length (m)	Wall height (m)	Wind rating BU's/m	Factored wind rating BU's/m	Wind bracing provided	Seismic rating BU's/m	Factored seismic rating BU's/m	Seismic bracing provided BU's
A	Aa	BL1-H	0.90	2.70	90	80	72	100	89	80
	Ab	BL1-H	0.90	2.70	90	80	72	100	89	80
	Ac	BL1-H	0.90	2.40	90	90	81	100	100	90
	Ad	BL1-H.	2.40	2.70	120	107	256	105	93	224
	Ae	BL1-H.	1.70	2.70	120	107	181	105	93	159
	Af	BL1-H	0.90	2.70	90	80	72	100	89	80
B	Ba	BL1-H.	2.30	2.40	120	120	276	105	105	242
	Bb	GS1-N	0.90	2.70	50	44	40	55	49	44
	Bc	BL1-H.	2.40	2.70	120	107	256	105	93	224
	Bd	GS1-N	0.90	2.40	50	50	45	55	55	50
	Be	GS1-N	1.00	2.40	50	50	50	55	55	55
	Bf	BL1-H.	2.40	2.70	120	107	256	105	93	224
	Bg	GS1-N	1.10	2.70	50	44	49	55	49	54
C	Ca	concrete (3000)	5.00	2.70	200	178	889	200	178	889
		-		2.40	0	0	0	0	0	0
		-		2.40	0	0	0	0	0	0
		-		2.40	0	0	0	0	0	0
		-		2.40	0	0	0	0	0	0
		-		2.40	0	0	0	0	0	0
		-		2.40	0	0	0	0	0	0

Bracing capacity: **2595 BU's** **2493 BU's**

Bracing demand: **2587 BU's** **1307 BU's**

02/08/2017

BRACING CALCULATIONS FOR
53 BANKS BOULEVARD, WHITBY

LOWER STOREY

WEST - EAST BRACING

Grid	Element	Type	Length (m)	Wall height (m)	Wind rating BU's/m	Factored wind rating BU's/m	Wind bracing provided	Seismic rating BU's/m	Factored seismic rating BU's/m	Seismic bracing provided BU's
1	1a	GS1-N.	2.80	2.70	70	62	174	60	53	149
	1b	GS1-N.	1.60	2.70	70	62	100	60	53	85
2	2a	GS1-N.	2.80	2.40	70	70	196	60	60	168
	2b	GS1-N.	2.10	2.40	70	70	147	60	60	126
3	3a	GS1-N.	4.00	2.40	70	70	280	60	60	240
4	4a	-	1.10	2.40	0	0	0	0	0	0
	4b	GS1-N.	2.20	2.70	70	62	137	60	53	117
	4c	GS1-N.	2.30	2.40	70	70	161	60	60	138
5	5a	-	1.10	2.70	0	0	0	0	0	0
	5b	GS1-N.	4.00	2.70	70	62	249	60	53	213
6	6a	GS1-N.	1.90	2.70	70	62	118	60	53	101
	6b	GS1-N.	1.70	2.70	70	62	106	60	53	91
		-		2.40	0	0	0	0	0	0
		-		2.40	0	0	0	0	0	0
		-		2.40	0	0	0	0	0	0
		-		2.40	0	0	0	0	0	0
		-		2.40	0	0	0	0	0	0
		-		2.40	0	0	0	0	0	0
		-		2.40	0	0	0	0	0	0
		-		2.40	0	0	0	0	0	0

Bracing capacity: **1668 BU's** **1429 BU's**

Bracing demand: **1001 BU's** **1307 BU's**

NORTH - SOUTH BRACING

Grid	Element	Type	Length (m)	Wall height (m)	Wind rating BU's/m	Factored wind rating BU's/m	Wind bracing provided	Seismic rating BU's/m	Factored seismic rating BU's/m	Seismic bracing provided BU's
A	Aa	BL1-H	0.90	2.70	90	80	72	100	89	80
	Ab	BL1-H	0.90	2.70	90	80	72	100	89	80
	Ac	BL1-H	0.90	2.40	90	90	81	100	100	90
	Ad	BL1-H.	2.40	2.70	120	107	256	105	93	224
	Ae	BL1-H.	1.70	2.70	120	107	181	105	93	159
	Af	BL1-H	0.90	2.70	90	80	72	100	89	80
B	Ba	BL1-H.	2.30	2.40	120	120	276	105	105	242
	Bb	GS1-N	0.90	2.70	50	44	40	55	49	44
	Bc	BL1-H.	2.40	2.70	120	107	256	105	93	224
	Bd	GS1-N	0.90	2.40	50	50	45	55	55	50
	Be	GS1-N	1.00	2.40	50	50	50	55	55	55
	Bf	BL1-H.	2.40	2.70	120	107	256	105	93	224
	Bg	GS1-N	1.10	2.70	50	44	49	55	49	54
C	Ca	concrete (3000)	5.00	2.70	200	178	889	200	178	889
		-		2.40	0	0	0	0	0	0
		-		2.40	0	0	0	0	0	0
		-		2.40	0	0	0	0	0	0
		-		2.40	0	0	0	0	0	0
		-		2.40	0	0	0	0	0	0
		-		2.40	0	0	0	0	0	0

Bracing capacity: **2595 BU's** **2493 BU's**

Bracing demand: **2587 BU's** **1307 BU's**

BRACING CALCULATIONS FOR
53 BANKS BOULEVARD, WHITBY

25/06/2017

UPPER OR SINGLE STOREY

EAST-WEST BRACING

Grid	Element	Type	Length (m)	Wall height (m)	Wind rating BU's/m	Factored wind rating BU's/m	Wind bracing provided	Seismic rating BU's/m	Factored seismic rating BU's/m	Seismic bracing provided BU's
1	1a	GS1-N.	6.00	3.30	70	51	305	60	44	262
	1b	GS1-N.	5.20	2.90	70	58	301	60	50	258
	1c	GS1-N.	3.10	2.50	70	67	208	60	58	179
2	2a	GS1-N.	2.00	3.00	70	56	112	60	48	96
	2b	GS1-N.	1.50	2.90	70	58	87	60	50	74
	2c	GS1-N.	3.40	2.50	70	67	228	60	58	196
3	3a	-	0.60	3.50	0	0	0	0	0	0
	3b	GS1-N.	2.90	3.10	70	54	157	60	46	135
	3c	GS1-N.	3.80	3.00	70	56	213	60	48	182
	3d	-	1.40	2.50	0	0	0	0	0	0
		-		2.40	0	0	0	0	0	0
		-		2.40	0	0	0	0	0	0
		-		2.40	0	0	0	0	0	0
		-		2.40	0	0	0	0	0	0
		-		2.40	0	0	0	0	0	0
		-		2.40	0	0	0	0	0	0
		-		2.40	0	0	0	0	0	0
		-		2.40	0	0	0	0	0	0
		-		2.40	0	0	0	0	0	0
		-		2.40	0	0	0	0	0	0

Bracing capacity: **1612 BU's** **1382 BU's**

Bracing demand: **319 BU's** **554 BU's**

NORTH-SOUTH BRACING

Grid	Element	Type	Length (m)	Wall height (m)	Wind rating BU's/m	Factored wind rating BU's/m	Wind bracing provided	Seismic rating BU's/m	Factored seismic rating BU's/m	Seismic bracing provided BU's
A	Aa	BL1-H	0.70	2.40	90	90	63	100	100	70
	Ab	BL1-H.	1.30	2.40	120	120	156	105	105	137
	Ac	BL1-H	0.60	2.40	90	90	54	100	100	60
B	Ba	BL1-H.	1.50	2.60	120	111	166	105	97	145
C	Ca	GS1-N.	1.40	2.80	70	60	84	60	51	72
	Cb	GS1-N.	3.20	2.80	70	60	192	60	51	165
D	Da	portal frame		2.80	0	0	140	0	0	140
E	Ea	EP1	0.90	3.50	125	86	77	130	89	80
	Eb	EP1	0.80	3.50	125	86	69	130	89	71
		-		2.40	0	0	0	0	0	0
		-		2.40	0	0	0	0	0	0
		-		2.40	0	0	0	0	0	0
		-		2.40	0	0	0	0	0	0
		-		2.40	0	0	0	0	0	0
		-		2.40	0	0	0	0	0	0
		-		2.40	0	0	0	0	0	0
		-		2.40	0	0	0	0	0	0
		-		2.40	0	0	0	0	0	0
		-		2.40	0	0	0	0	0	0
		-		2.40	0	0	0	0	0	0

Bracing capacity: **1001 BU's** **940 BU's**

Bracing demand: **823 BU's** **554 BU's**

BRACE TYPES

25/06/2017

BRACE TYPE	MINIMUM LENGTH (m)	LINING REQUIREMENT	OTHER REQUIREMENTS
-		No bracing required.	
GS1-N	0.4	10mm GIB Standard Plasterboard one face	n/a
GS1-N.	1.2	10mm GIB Standard Plasterboard one face	n/a
BL1-H	0.4	10mm GIB Braceline one face	Panel hold down fixings
BL1-H.	1.2	10mm GIB Braceline one face	Panel hold down fixings
HF9	1.2	Hardiflex. Refer to figs 9, 21.	n/a
EP1	0.6	7mm Ecoply or 12mm Shadowclad one side	GIB Handibrac hold down connections each end
concrete (3000)	1.5	Concrete or masonry wall, length:height ratio>3.0.	n/a

Check minimum requirement

minimum internal bracing:
lower (east-west) = 1307/2x6 = 109 BUs.
lower (north-south) = 1307/2x3 = 218 BUs.

internal bracing provided (lower).
2. 294 B. 893.
3. 240
4. 255 OK
5. 213

minimum external bracing:
lower (east-west) = 6.7x15 101 < 109 BUs
lower (north-south) = 19.8x15 = 297 BUs.

external bracing provided (lower)
1 225 A. 731
6. 192 C. 889.
OK

minimum internal bracing
upper (east-west) = 1382/2x3 = 230 BUs
upper (north-south) = 1382/2x5 = 138 BUs

internal bracing provided (upper):
2. 366 B. 145
C. 237
D. 138.
OK

minimum external bracing:
upper (east-west) = 16.5x15 = 248 BUs
upper (north-south) = 6.0x15 = 90 < 138 BUs.

external bracing provided (upper).
1. 437 A. 267
3. 317 E. 154
OK

Portal Frame Design

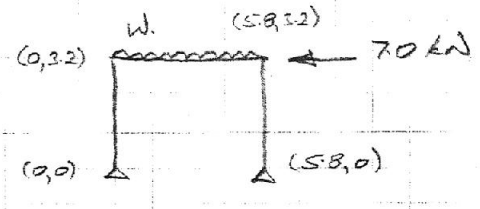

W_1: roof + ceiling = $0.35 \times 3.5 = 1.23$ kN/m
self weight = 0.25 kN/m.
$\rightarrow G = 1.48$ kN/m

roof live load = 0.25×3.5
$\rightarrow Q = 0.88$ kN/m.

wind loads:
$V_{des,\theta} = 44$ m/s.
$\hat{h} = 9°$
$h/d = 3.5/6 = 0.58.$
$\rightarrow C_{pe} = -0.96$

$\rightarrow W_u = 0.6 \times 44^2 \times 10^{-3} \times -0.96 \times 3.5$
$\rightarrow W_u = -3.90$ kN/m.

$1.2G + 1.5Q = \underline{3.10 \text{ kN/m}}$.

$0.9G + W_u = -2.57$ kN/m.

$P = 0.724 \times 7 = 5.07$ kN

W_s:

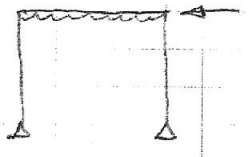

$W_s = 0.724 \times 3.9 = 2.82$ kN/m.

$\rightarrow \delta = 0.017$m. $= H/190$. OK

PORTAL FRAME
180 UB 22.
REFER TO SK

check beam deflection:

$G + 0.7Q = 2.10$ kN/m.

$\rightarrow \delta = \frac{5}{384} \times 2100 \times 5.8^4 / 200 \times 10^9 \times 15.3 \times 10^{-6}$

$= 0.010$m $= \text{span}/573$. OK

CASE 11: 1.2*DL + 1.5*LL

-- Load Combinations --

Case	Factor	
1	1.200	DL
2	1.500	LL

-- Sum of Applied Loads (Global Axes): --
FX: 0.000 FY: -21.136 FZ: 0.000
Moments about the global origin:
MX: 0.000 MY: 0.000 MZ: -61.295

== N O D E D I S P L A C E M E N T S ==

CASE 11: 1.2*DL + 1.5*LL

Node	X-Disp m	Y-Disp m	Z-Disp m	X-Rotn rad	Y-Rotn rad	Z-Rotn rad
1	0.00	0.00	0.00	0.00000	0.00000	0.00120
2	0.00	0.00	0.00	0.00000	0.00000	-0.00240
3	0.00	0.00	0.00	0.00000	0.00000	0.00240
4	0.00	0.00	0.00	0.00000	0.00000	-0.00120

== M E M B E R F O R C E S ==

CASE 11: 1.2*DL + 1.5*LL

Member	Node	Axial kN	Shear-y kN	Shear-z kN	Torque kNm	Moment-y kNm	Moment-z kNm
1	1	-10.57	2.15	0.00	0.00	0.00	0.00
	2	-9.73	2.15	0.00	0.00	0.00	-6.88
2	2	-2.15	-9.73	0.00	0.00	0.00	-6.88
	3	-2.15	9.73	0.00	0.00	0.00	-6.88
3	3	-9.73	-2.15	0.00	0.00	0.00	-6.88
	4	-10.57	-2.15	0.00	0.00	0.00	0.00

Positive Forces (Member Axes):
Axial - Tension Shear - End A sagging
Torque - Right-hand twist Moment - Sagging

== S U P P O R T R E A C T I O N S ==

CASE 11: 1.2*DL + 1.5*LL

Node	Force-X kN	Force-Y kN	Force-Z kN	Moment-X kNm	Moment-Y kNm	Moment-Z kNm
1	2.15	10.57	0.00	0.00	0.00	0.00
4	-2.15	10.57	0.00	0.00	0.00	0.00
SUM:	0.00	21.14	0.00	(all nodes)		

(Reactions act on structure in positive global axis directions.)

CASE 12: .9*DL+Wu

-- Load Combinations --

Case	Factor	
1	0.900	DL
3	1.000	Wu

-- Sum of Applied Loads (Global Axes): --
FX: -7.000 FY: 12.510 FZ: 0.000
Moments about the global origin:
MX: 0.000 MY: 0.000 MZ: 58.679

== N O D E D I S P L A C E M E N T S ==

CASE 12: .9*DL+Wu

Node	X-Disp m	Y-Disp m	Z-Disp m	X-Rotn rad	Y-Rotn rad	Z-Rotn rad
1	0.00	0.00	0.00	0.00000	0.00000	0.00855
2	-0.02	0.00	0.00	0.00000	0.00000	0.00524
3	-0.02	0.00	0.00	0.00000	0.00000	0.00185
4	0.00	0.00	0.00	0.00000	0.00000	0.01025

== M E M B E R F O R C E S ==

CASE 12: .9*DL+Wu

Member Node Axial Shear-y Shear-z Torque Moment-y Moment-z

CASE 11: 1.2*DL + 1.5*LL

-- Load Combinations --

Case	Factor	
1	1.200	DL
2	1.500	LL

-- Sum of Applied Loads (Global Axes): --
FX: 0.000 FY: -21.136 FZ: 0.000
Moments about the global origin:
MX: 0.000 MY: 0.000 MZ: -61.295

== N O D E D I S P L A C E M E N T S ==

CASE 11: 1.2*DL + 1.5*LL

Node	X-Disp m	Y-Disp m	Z-Disp m	X-Rotn rad	Y-Rotn rad	Z-Rotn rad
1	0.00	0.00	0.00	0.00000	0.00000	0.00120
2	0.00	0.00	0.00	0.00000	0.00000	-0.00240
3	0.00	0.00	0.00	0.00000	0.00000	0.00240
4	0.00	0.00	0.00	0.00000	0.00000	-0.00120

== M E M B E R F O R C E S ==

CASE 11: 1.2*DL + 1.5*LL

Member	Node	Axial kN	Shear-y kN	Shear-z kN	Torque kNm	Moment-y kNm	Moment-z kNm
1	1	-10.57	2.15	0.00	0.00	0.00	0.00
	2	-9.73	2.15	0.00	0.00	0.00	-6.88
2	2	-2.15	-9.73	0.00	0.00	0.00	-6.88
	3	-2.15	9.73	0.00	0.00	0.00	-6.88
3	3	-9.73	-2.15	0.00	0.00	0.00	-6.88
	4	-10.57	-2.15	0.00	0.00	0.00	0.00

Positive Forces (Member Axes):
Axial - Tension Shear - End A sagging
Torque - Right-hand twist Moment - Sagging

== S U P P O R T R E A C T I O N S ==

CASE 11: 1.2*DL + 1.5*LL

Node	Force-X kN	Force-Y kN	Force-Z kN	Moment-X kNm	Moment-Y kNm	Moment-Z kNm
1	2.15	10.57	0.00	0.00	0.00	0.00
4	-2.15	10.57	0.00	0.00	0.00	0.00
SUM:	0.00	21.14	0.00 (all nodes)			

(Reactions act on structure in positive global axis directions.)

CASE 12: .9*DL+Wu

-- Load Combinations --

Case	Factor	
1	0.900	DL
3	1.000	Wu

-- Sum of Applied Loads (Global Axes): --
FX: -7.000 FY: 12.510 FZ: 0.000
Moments about the global origin:
MX: 0.000 MY: 0.000 MZ: 58.679

== N O D E D I S P L A C E M E N T S ==

CASE 12: .9*DL+Wu

Node	X-Disp m	Y-Disp m	Z-Disp m	X-Rotn rad	Y-Rotn rad	Z-Rotn rad
1	0.00	0.00	0.00	0.00000	0.00000	0.00855
2	-0.02	0.00	0.00	0.00000	0.00000	0.00524
3	-0.02	0.00	0.00	0.00000	0.00000	0.00185
4	0.00	0.00	0.00	0.00000	0.00000	0.01025

== M E M B E R F O R C E S ==

CASE 12: .9*DL+Wu

Member	Node	Axial	Shear-y	Shear-z	Torque	Moment-y	Moment-z

		kN	kN	kN	kNm	kNm	kNm
1	1	2.39	1.98	0.00	0.00	0.00	0.00
	2	3.02	1.98	0.00	0.00	0.00	-6.34
2	2	-1.98	3.02	0.00	0.00	0.00	-6.34
	3	-1.98	-10.74	0.00	0.00	0.00	16.06
3	3	10.74	5.02	0.00	0.00	0.00	16.06
	4	10.12	5.02	0.00	0.00	0.00	0.00

Positive Forces (Member Axes):
Axial - Tension Shear - End A sagging
Torque - Right-hand twist Moment - Sagging

== S U P P O R T R E A C T I O N S ==

CASE 12: .9*DL+Wu

Node	Force-X kN	Force-Y kN	Force-Z kN	Moment-X kNm	Moment-Y kNm	Moment-Z kNm
1	1.98	-2.39	0.00	0.00	0.00	0.00
4	5.02	-10.12	0.00	0.00	0.00	0.00
SUM:	7.00	-12.51	0.00 (all nodes)			

(Reactions act on structure in positive global axis directions.)

Chemical Anchoring - ChemSet Anchor Stud Design Calculator

Ramset™

Injection Sys:	Epcon™ C6 Series		
Anchor Type:	Anchor Stud - Gr 5.8	Anchor Size	d_b = M 12

Input Description (Strength Limit State Design)	Input Data (per anchor)		
1. Number of anchors (n)	n =	2	-
2. Anchor Spacing (a)	a =	100	mm
3. Concrete Edge Distance (e)	e =	90	mm
4. Concrete Cylinder Strength (f'c)	f'c =	25	MPa
5. Concrete Cube Strength (β)	β =	31	MPa
6. Effective Depth (h>6xdh)	h =	90	mm
7. Anchor Stud size (d_b) - M8 → M24	d_b =	12	mm
8. Concrete Edge Distance Corner (e1)	e_1 =	10000	mm
9. Internal to a row (I) or end of row (E)	I or E	I	row
10. Dry Hole (D) or Wet hole (W)	D or W	D	-
11. Min Concrete Sub'te Thickness (b_m)	b_m =	118	mm
12. Anchor Stud Grade (5.8, 8.8, 316 SS)	Grade =	5.8	Gr
13. Fixture Thickness (t)	t =	10	mm
14. Effective Length (L_e)	L_e =	100	mm
15. Design Tensile Load-per anchor (N*)	N* =	10	kN
16. Design Shear Load-per anchor (V*)	V* =	5	kN
17. Direction of Shear design load (α)	α =	0	°

Plan View - Generic (Dimensions in mm)

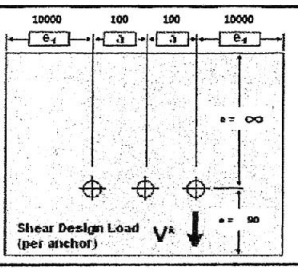

Project Details

Project Name:- 53 Banks Boulevard
Project Site Address:- Whitby
Company Name:- Dave White
Design Identification:- Portal frame base
Date:- 27/06/2017

ChemSet™ Anchor Stud "Specification": Part No. CS12160 or CS12160GH

Epcon™ C6 Series "Specification": C6-18

Hole Diameters (mm)	Capacity Reduction Factors
Drill d_h = 14	Conc. Tension/Shear ϕ = 0.6
Fixture d_f = 15	Steel Tension/Shear ϕ = 0.8

Direction of Shear Design Load - α: α = 0° - towards edge; α = 180° - away from edge

Output Description (Strength Limit State Design)	Output Data (per anchor)		
DESIGN O.K.	MIN. CRITERIA for a,e & h - O.K.		
Des. Red. Ult. CONC. Tensile Capacity	ϕN_{urc} =	23.0	kN
Red. Char. Ult. STEEL Tensile Capacity	ϕN_{us} =	33.8	kN
Des. Red. Ult. CONC. Shear Capacity	ϕV_{urc} =	8.4	kN
Red. Char. Ult. STEEL Shear Capacity	ϕV_{us} =	21.0	kN
Drill hole diameter	d_h =	14	mm
TENSION O.K.			
Design Red. Ult. Tensile Capacity	ϕN_{ur} =	23.0	kN
Tension Design Check	$N^*/\phi N_{ur}$ =	0.44	< 1
SHEAR O.K.			
Design Red. Ult. Shear Capacity	ϕV_{ur} =	8.4	kN
Shear Design Check	$V^*/\phi V_{ur}$ =	0.59	< 1
COMBINED TENSION SHEAR O.K.			
Combined Check - $N^*/\phi N_{ur} + V^*/\phi V_{ur}$ =		1.03	< 1.2

Elevation View - Generic (Dimensions in mm)

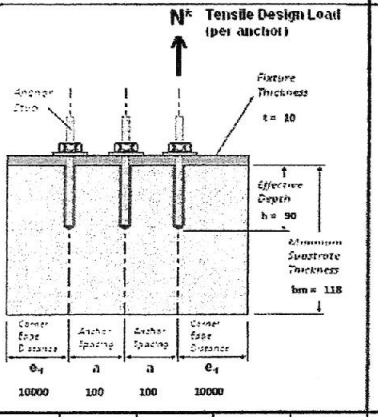

Anchor Loaded

"E" *Anchor end of a row*

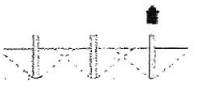

"I" *Anchor internal to a row*

Anchor Size	d_b	Metric	8	10	12	16	20	24	30	36
Drill hole diameter	d_h	(mm)	10	12	14	18	24	26	N/A	N/A
Stressed Area	A_b	(mm²)	33	53	79	154	232	337	N/A	N/A
Anchor Stud Yield Strength	f_y	(MPa)	430	430	430	420	420	420	N/A	N/A
Red.Char. Ult. Steel Tensile Capacity	ϕN_{us}	(kN)	14.3	22.7	33.8	64.7	97.6	141.3	N/A	N/A
Red.Char. Ult. Steel Shear capacity	ϕV_{us}	(kN)	8.9	14.1	21.0	39.7	59.9	86.8	N/A	N/A
Edge distance for no conc.cone reduction	e_c	(mm)	35	40	50	65	80	100	N/A	N/A
Anchor spacing for no conc.cone reduction	a_c	(mm)	50	60	75	100	120	145	N/A	N/A
Absolute Minimum edge dist. & anc'r spac.	e_m & a_m	(mm)	25	30	35	50	60	75	N/A	N/A

Effective Depth - h		Design Reduced Ultimate tensile capacity ϕN_{ur} (kN per anchor) Based on edge distance (e_c) and anchor spacing (a_c) for no conc.cone reduction							
60	(mm)	10.6							
65	(mm)	12.0							
70	(mm)	13.4	14.6						
80	(mm)	14.3	17.9						
90	(mm)	14.3	21.4	23.0					
100	(mm)	14.3	22.7	26.9					
110	(mm)	14.3	22.7	31.0	34.8				
125	(mm)	14.3	22.7	33.8	42.2				
140	(mm)	14.3	22.7	33.8	50.0				
150	(mm)	14.3	22.7	33.8	55.5	60.7			
160	(mm)	14.3	22.7	33.8	61.1	66.8	71.9		
170	(mm)	14.3	22.7	33.8	64.7	73.2	78.7		
180	(mm)	14.3	22.7	33.8	64.7	79.7	85.8		
190	(mm)	14.3	22.7	33.8	64.7	88.5	93.0	N/A	
220	(mm)	14.3	22.7	33.8	64.7	97.6	115.9	N/A	
240	(mm)	14.3	22.7	33.8	64.7	97.6	132.1	N/A	N/A
270	(mm)	14.3	22.7	33.8	64.7	97.6	141.3	N/A	N/A
330	(mm)	14.3	22.7	33.8	64.7	97.6	141.3	N/A	N/A
350	(mm)	14.3	22.7	33.8	64.7	97.6	141.3	N/A	N/A

The design engineer should ensure the structural element is capable of supporting these loads. Refer to Ramset™ Specifiers Anchoring Resource Book Version 5 for more information or explanation

of technical data. ITW Australia Pty. Ltd. ABN 63 004 235 063 trading as Ramset™ New Zealand. © Copyright 2014

Portal Frame Design for 53 Banks Boulevard, Whitby

Moment amplification

$\lambda_s = 1/(1-1/\lambda_c)$

$\lambda_c = 3EI_r/l_r(N^*_c h_c + 0.3N^*_r l_r)$

E=	200E+9	Pa	
I_r=	15.3E-6	m^4	value of I_x for rafter
l_r=	5.8	m	length of rafter
N^*_c=	10.6kN		design axial force
h_e=	3.20	m	eaves height
N^*_r=	10.6kN		design axial force in rafter

→ λ_c= 30.23

→ λ_s= 1.03

M^*_m= 16.1kNm — from microStran analysis

→ **M*= 16.7kNm**

In plane capacity

$M^* \leq \varnothing' M_i$

$\varnothing'$= 0.9

$M_i = M_s(1-N^*/\varnothing' N_c) \leq M_{rx}$ or M_{ry}

$M_s = f_y Z_e$

f_y=	250MPa		
Z_e=	195E-3	mm^3	→ M_s= 49kNm
N*=	11kN		

$N_c = \alpha_c N_s \leq N_s$

$N_s = k_f A_n f_y$

k_f=	1		
A_n=	2820	mm^2	→ N_s= 705kN

$M_{rx} = M_{sx}(1-N^*/\varnothing' N_s)$ → **M_{rx}= 43.1kN** OK

$\alpha_c = \zeta\{1-\sqrt{[1-(90/\zeta\lambda)^2]}\}$

$\zeta = [(\lambda/90)^2 + 1 + \eta]/2(\lambda/90)^2$

$\lambda = \lambda_n + \alpha_a \alpha_b$

$\eta = 0.00326(\lambda - 13.5) \geq 0$

$\lambda_n = (L_e/r)\sqrt{(k_f)}\sqrt{(f_y/250)}$

L_e=	5800	mm	
r_x=	73.7	mm	→ λ_n= 78.7

$\alpha_a = [2100(\lambda_n - 13.5)]/[\lambda_n^2 - 15.3\lambda_n + 2050]$ → α_a= 19.5

α_b= 0 → λ= 78.7

→ η= 0.21

→ ζ= 1.29

→ α_c= 0.69

→ N_c= 486kN

→ **$\varnothing' M_i$= 42.8kNm** OK

Out of plane capacity

$M^*_x \leq ø' M_{ox}$

$M_{ox} = M_{bx}(1 - N^*/ø' N_{cy}) \leq M_{rx}$

$M_{bx} = \alpha_m \alpha_s M_s \leq M_s$

$\alpha_m =$ 1

$\alpha_s = 0.6\{\sqrt{[(M_s/M_{oa})^2 + 3]} - (M_s/M_{oa})\}$

$M_{oa} = \sqrt{\{(\pi^2 EI_y/L_e^2)[GJ + (\pi^2 EI_w/L_e^2)]\}}$

G=	80	GPa	
J=	82E+3	mm^4	
I_y=	1.22E+06	mm^4	
I_w=	8.7E+9	mm^6	
L_e=	1000	mm	0.85 x distance between girts

→ M_{oa}= 239kNm

→ α_s= 0.92

→ M_{bx}= 45.1kNm

r_y= 20.8 mm

→ λ_n= 48.1

→ α_a= 20.0

→ λ= 48.1

→ η= 0.11

→ ζ= 2.45

→ α_c= 0.87

→ N_c= 613kN

→ **$ø' M_{ox}$= 39.6kNm** OK

Dave White
Job: 1721 portal frame
53 Banks Boulevard
Portal Frame

25/06/2017
16:52:18

Load Cases:
11 C 1.2*DL + 1.5*LL
12 C .9*DL+Wu

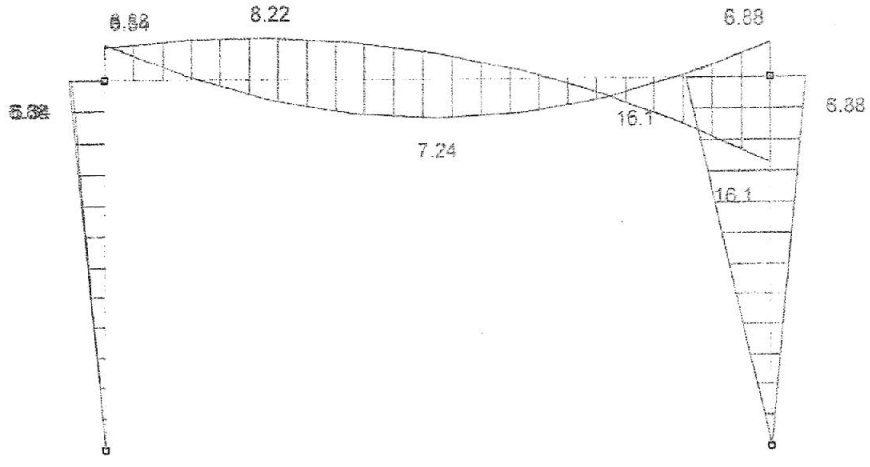

Y
Z X
theta: 270 phi: 0

Combined ultimate moments

Bending Moment, Mz

Dave White
Job: 1721 portal frame
53 Banks Boulevard
Portal Frame

25/06/2017
17:17:13

Load Cases:
4 P Ws

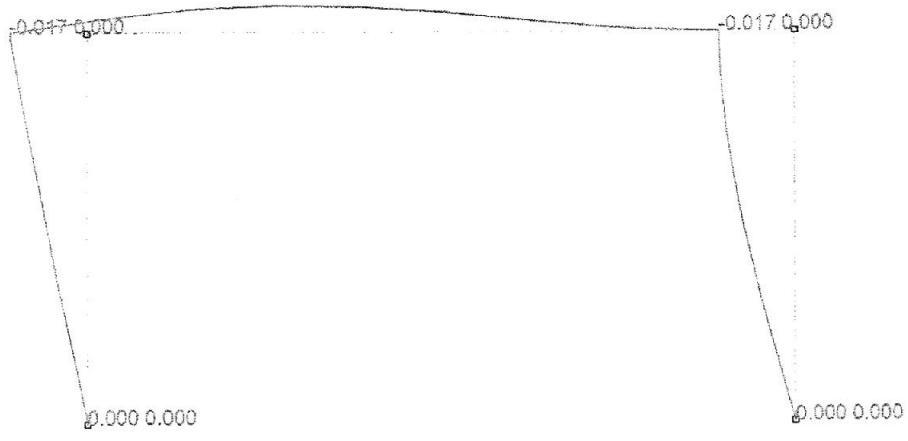

Y
Z X

theta: 270 phi: 0

180UB22: serviceability wind load

Displaced Shape

Microstran V9.01.130911 {116411}

C:\Users\davidwhite\Documents\Projects - windows\2017\1721 portal frame.msw

BEAM 1

span = 4.5m.

loads: roof + ceiling = 0.35 × 3.8 = 1.33 kN/m
self weight = 0.25 kN/m.
→ G = 1.58 kN/m

live load = 0.25 × 3.8
→ Q = 0.95 kN/m.

wind load for canopy: $h_c/h = 1$

→ $C_{pn} = 0.2, [-0.3 - 0.6 \times \frac{4}{4}] = \underline{-0.9} < -1.5$

$w_n = -0.96 \times 0.6 \times 44^2 \times 10^{-3} \times 3.8$
→ $w_n = -4.24$ kN/m.

$1.2G + 1.5Q = 3.32$ kN/m.
$0.9G + w_n = -3.04$ kN/m.

$G + 0.7Q = 2.25$ kN/m
$w_s = 2.20$ kN/m

$M^* = \frac{1}{8} \times 3.32 \times 4.5^2 = 8.40$ kNm

for 2/290×45.

$\phi = 0.8$
$k_1 = 0.8$
$f_b = 14.0$ MPa.
$Z = 1260 \times 10^{-6}$ m^3
$I = 183 \times 10^{-6}$ m^4.

→ $\phi M_n = 0.8 \times 0.8 \times 14 \times 1260 \times 10^{-3} = 11.30$ kNm.

$\delta = \frac{5}{384} \times 2250 \times 4.5^4 / 5.4 \times 10^9 \times 183 \times 10^{-6}$

$= 0.012$m $= span/370$. too high.

for 300×90 Hy 90

$\delta = \frac{5}{384} \times 2250 \times 4.5^4 / 9 \times 10^9 \times 202 \times 10^{-6}$

$= 0.007$m $= span/680$. OK

BEAM 1
300 Hy 90
REFER TO SK6

BEAM 2

span = 5.8m.

loads are similar to beam 3.

$M^* = \frac{1}{8} \times 3.10 \times 5.8^2 = 13.0$ kNm

for 180 UB 22

$\phi M_b = 16.3$ kNm. OK

BEAM 2
180 UB 22
REFER TO SK6.

BEAM 4

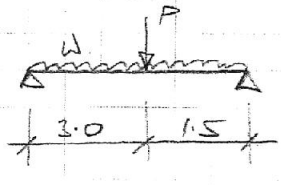

$P_s = 0.5 \times 2.82 \times 5.8 = 8.18$ kN

$P^* = 0.5 \times 3.10 \times 5.8 = 9.00$ kN

$w = 0.25$ kN/m

$M^* = 9.0 \times 3.0 \times 1.5/4.5 + \frac{1}{8} \times 1.2 \times 0.25 \times 4.5^2 = 9.8$ kNm

for 2/290×45:

$\delta = [0.85 \times \frac{1}{48} \times 8180 \times 4.5^3 + \frac{5}{384} \times 250 \times 4.5^4] / 5.4 \times 10^9 \times 183 \times 10^{-6}$

$= 0.015$m. too high.

for 300 Hy 90:

$\delta = [13{,}200 + 1{,}335] / 9 \times 10^9 \times 202 \times 10^{-6}$

$= 0.008$m $=$ span/562 OK

BEAM 4
300 Hy 90
REFER TO SK6.

BEAM 5

span = 5.1m.

loads: roof + soffit = 0.35×2.6 = 0.91 kN/m
self weight = 0.25 kN/m.
→ G = 1.16 kN/m.

line load = 0.25×2.6
→ Q = 0.65 kN/m

wind load = −0.9×0.6×44²×10⁻³×2.6
→ w_s = −2.72 kN/m.

G + 0.7Q = 1.62 kN/m.
w_s = 0.72×2.72 = 1.97 kN/m.

1.2G + 1.5Q = 2.37 kN/m.
0.9G + w_s = −1.68 kN/m.

→ M* = $\frac{1}{8}$×2.37×5.1² = 7.71 kNm

for 2/290×45.

$\delta = \frac{5}{384} \times 1970 \times 5.1^4 / 5.4\times10^9 \times 183\times10^{-6}$

= 0.018m. too high.

for 300×90 Hy 90

$\delta = \frac{5}{384} \times 1970 \times 5.1^4 / 9\times10^9 \times 202\times10^{-6}$

= 0.010m = span/534. OK

BEAM 5
300 Hy 90
REFER TO SK6.

timber beam reactions:
1. 0.5×−3.04×4.5 = −6.84 kN
4. $\frac{9}{4.5}$×9 = −6.0 kN
5. 0.5×−1.68×5.1 = −4.28 kN

for pair of Lumberlok concealed purlin cleats

2/CPC 40: → 0.8 × 12.16 = 9.7 kN OK

pair of Tylok 6T10

→ 30×0.8×0.481 = 11.5 kN OK

TIMBER BEAM FIXINGS
2/CPC 40 PER CONNECTION
+ 2 TYLOK 6T10
REFER TO SK 6.

CANTILEVERED BEAMS OVER ENTRY

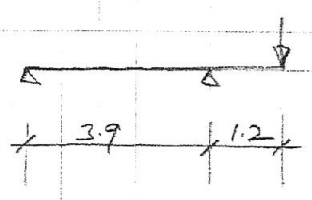

P: roof + ceiling = 0.35 × 2.8 × 3 = 2.94 kN
wall = 0.7 × 3 = 2.1 kN
floor + ceiling = 0.35 × 1.0 × 3 = 1.05 kN
→ P_G = 6.09 kN
roof live load = 0.25 × 2.8 × 3 = 2.10 kN
floor live load = 1.5 × 1.0 × 3 = 4.50 kN
→ P_Q = 6.60 kN

$P_G + 0.7 P_Q = 10.7$ kN

$1.2 P_G + 1.5 P_Q = 17.2$ kN

→ $M^* = 17.2 \times 1.2 = 20.7$ kNm.

for 230 PFC 25:

$\phi M_b = 43$ kNm. OK

$\delta = 0.005$ m OK

CANTILEVERED BEAMS
OVER ENTRY
230 PFC 25
REFER TO SK 5

uplift = $17.2 \times 1.2 / 3.9$ = 5.29 kN

→ 2M12

Ceiling Diaphragm over Lounge.

length of diaphragm = 7m.
aspect ratio = $\frac{7}{6}$ = 1.2

bracing capacity of adjacent walls.

$E_a + E_b$ = 146 ÷ 6 = 24 BU/m. OK
porta frame = 140 ÷ 6 = 23 BU/m. OK
3b = 108 ÷ 7 = 15 BU/m. OK
1a = 305 ÷ 7 = 44 BU/m. OK

$\alpha = 9°$ OK.

Column Footings.

uplift = $0.5 \times -0.96 \times 0.6 \times 44^2 \times 10^{-3} \times 6.2$ = 3.5 kN
for 600×600×400 footing → weight = $25 \times 0.6^2 \times 0.4$ = 3.6 kN OK

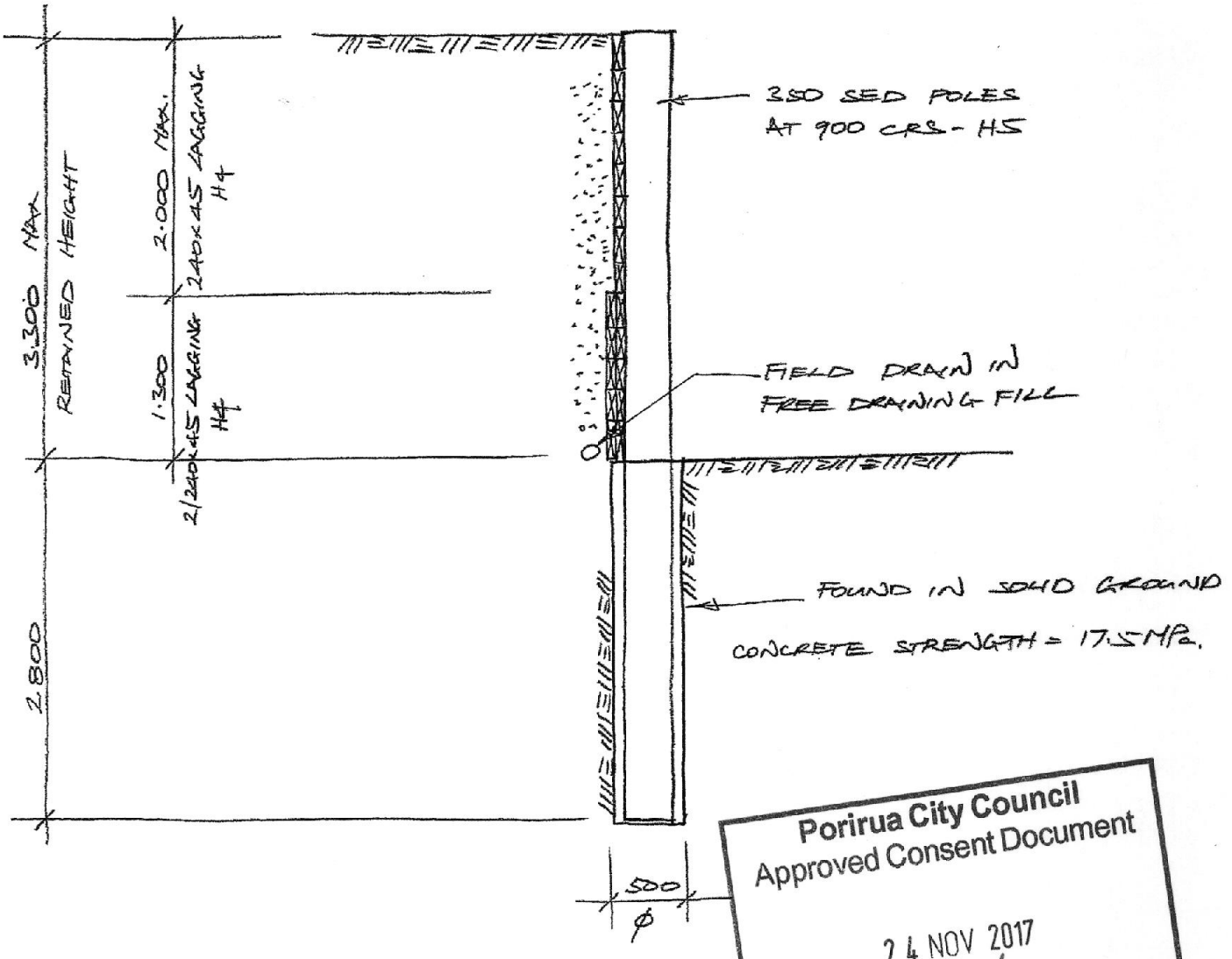

3.3m RETAINING WALL

Porirua City Council
Approved Consent Document
24 NOV 2017
0560/17
BCA Number
David Nolan
On behalf of Porirua City Council

53 BANKS BOULEVARD

1721/SK1 A.

STRUCTURAL DETAILS

24/6/17

A. 15/7/17 Retained height amended.

200 SERIES BLOCK WORK:

* All work by expert blocklayer in accordance with NZS 4210
* Accurate location of starter bars is essential
* Clean out ports every 1200 max.
* Control joints at 6m max.
* Blocks to be laid in stretcher bond pattern.
* All cells to be fully grouted.
* Grade 300E MA reinforcing

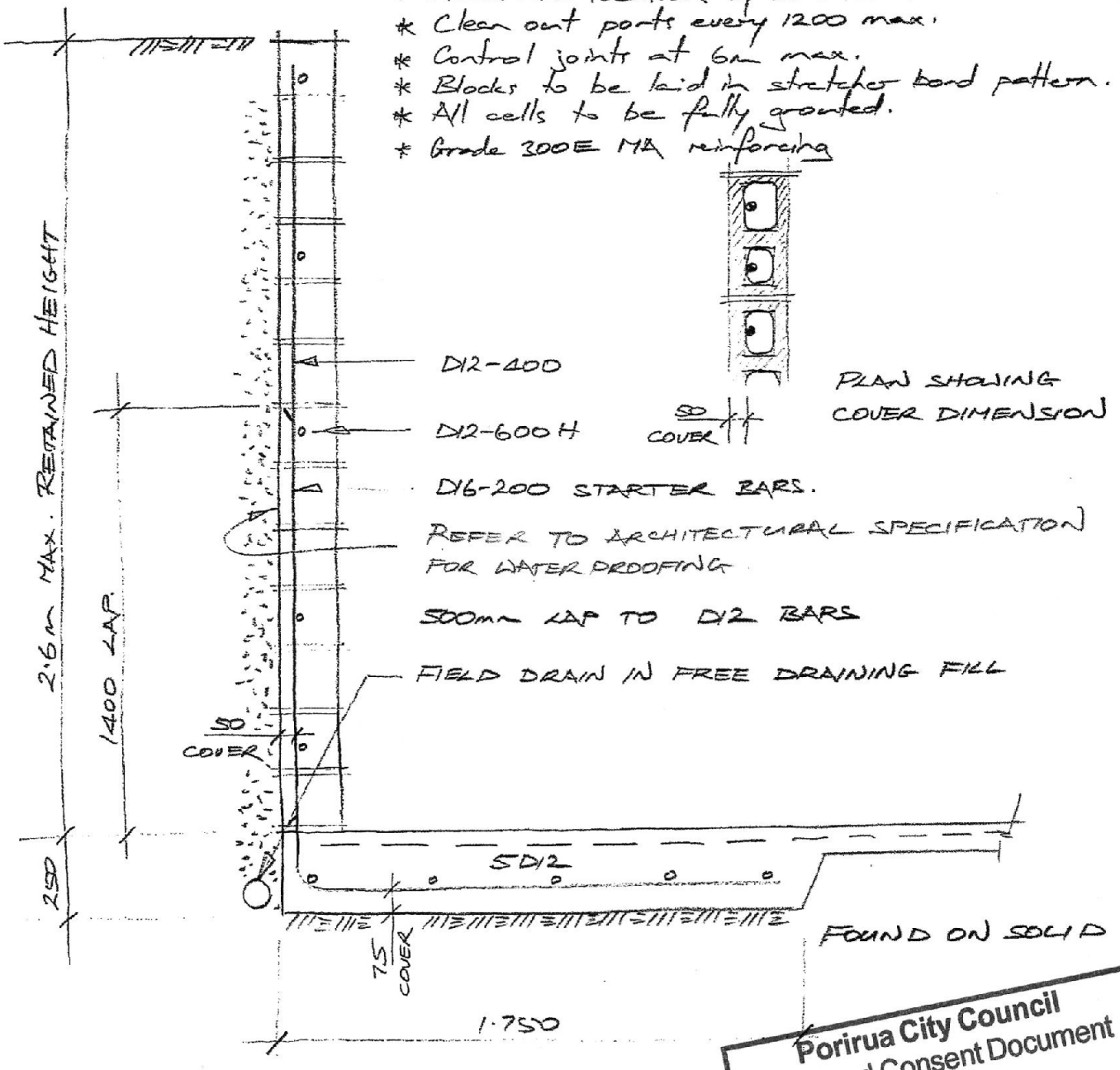

CANTILEVERED MASONRY WALL

Porirua City Council
Approved Consent Document
24 NOV 2017
0560/17
BCA Number
David Nolan
On behalf of Porirua City Council

53 BANKS BOULEVARD

1721/SK2

STRUCTURAL DETAILS

24/6/17 DJ

200 SERIES BLOCKWORK:

* All work by expert blocklayer in accordance with NZS 4210
* Accurate location of starter bars is essential
* Clean out ports every 1200 max.
* Control joints (with densoplape) at 6m max
* Blocks to be laid in stretcher bond
* All cells to be fully grouted.
* Grade 300E MA reinforcing

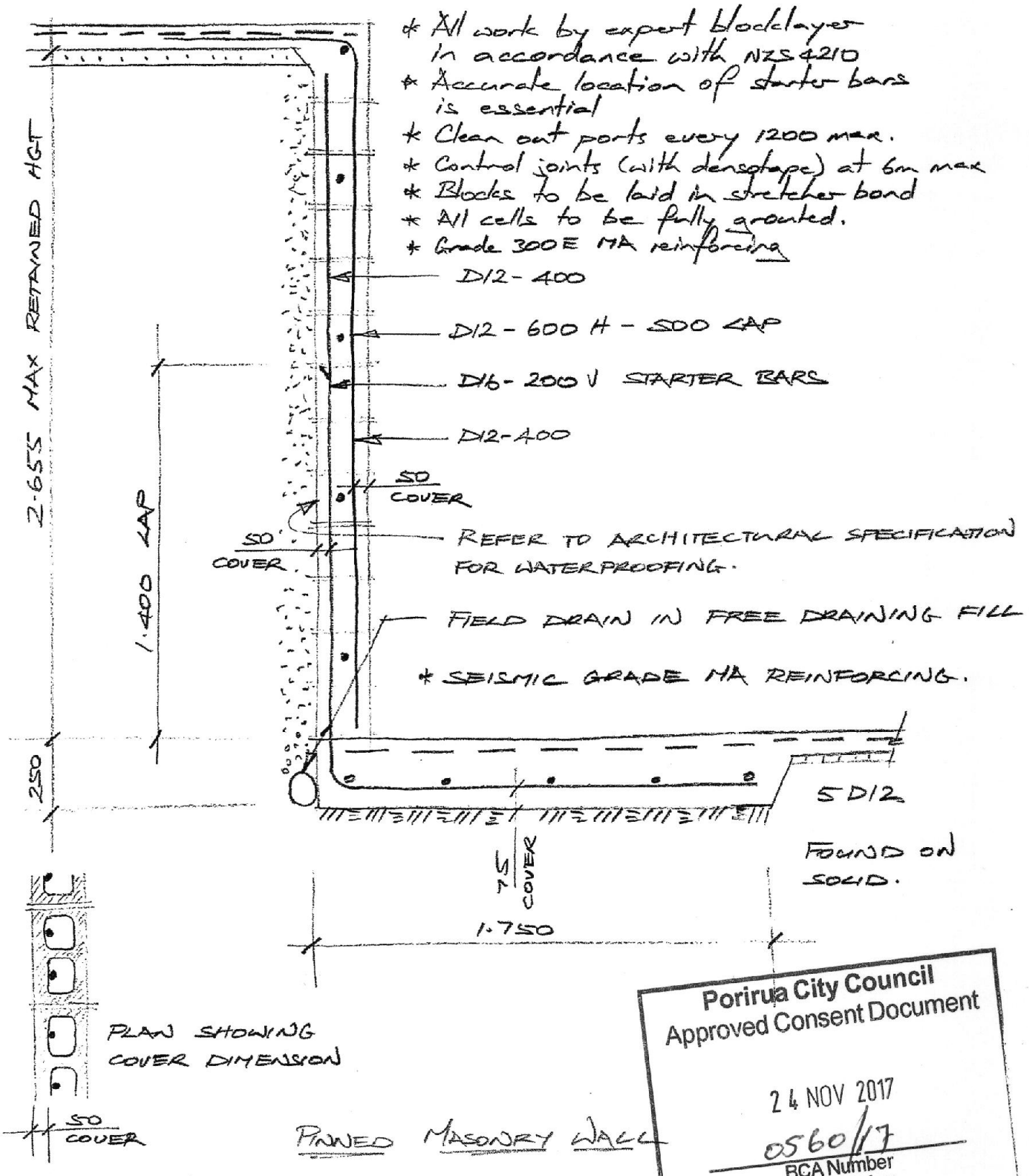

PINNED MASONRY WALL

Porirua City Council
Approved Consent Document
24 NOV 2017
0560/17
BCA Number
David Nolan
On behalf of Porirua City Council

53 BANKS BOULEVARD

1721/SK3 A.

STRUCTURAL DETAILS

24/6/17

A. 9/7/17 retained height

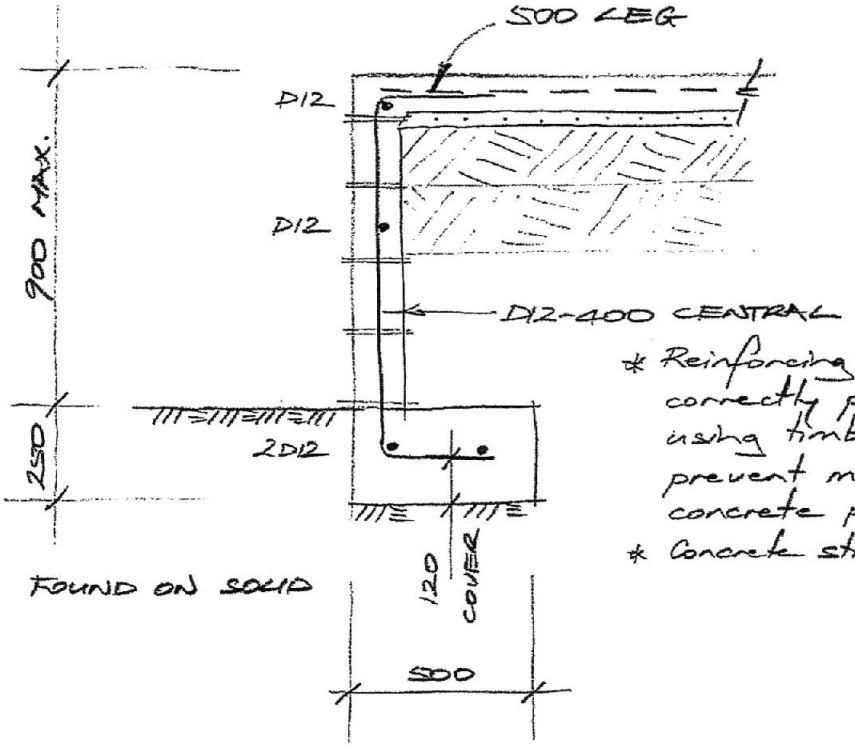

* Reinforcing bars are to be correctly positioned and secured using timber framework to prevent movement during concrete pour
* Concrete strength = 17.5 MPa.

150 SERIES BLOCKWORK

- All work by expert blocklayer in accordance with NZS4210
- Clean out ports every 1200mm max.
- Control joints with densotape on horizontal bars at 6m max.
- Reinforcing to be seismic grade 300E MA
- Blocks to be laid in stretcher bond pattern
- All cells to be fully grouted.

FOUNDATION WALL

Porirua City Council
Approved Consent Document
24 NOV 2017
0560/17
BCA Number
David Nolan
On behalf of Porirua City Council

53 BANKS BOULEVARD

1721/SK4

STRUCTURAL DETAILS

24/6/17 DN

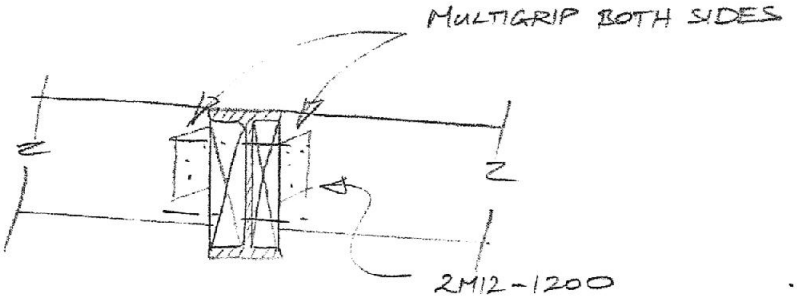

DETAIL 2/SK6

KNEE JOINT PROCEDURE:
- Cut and grind UBs to shape
- Butt weld webs, grind flush.
- 6mm FW 10mm plate stiffener to web
- Butt weld flanges + stiffener plates

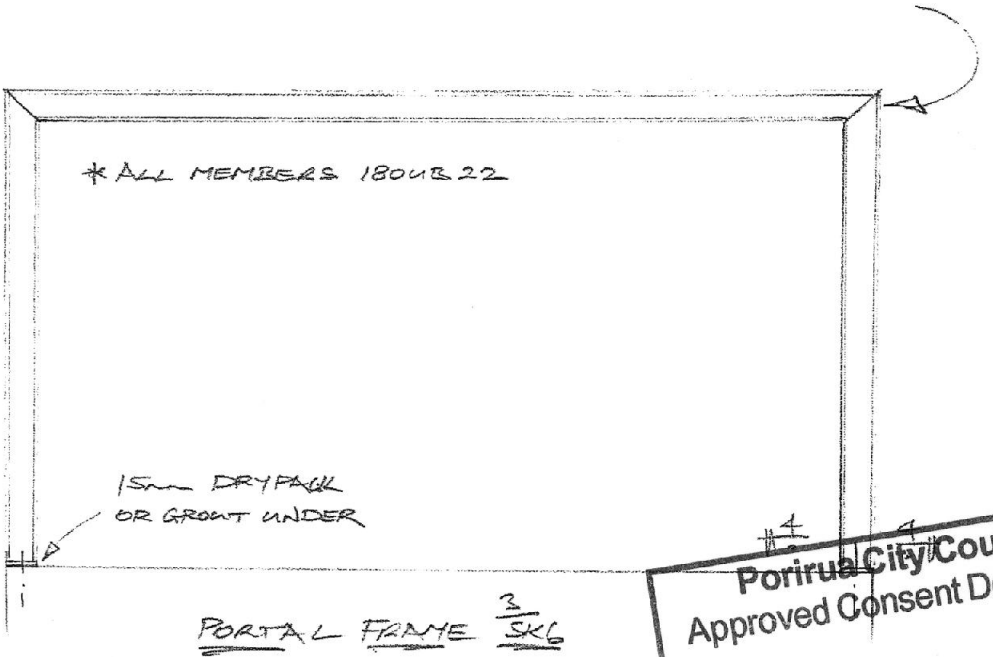

PORTAL FRAME 3/SK6

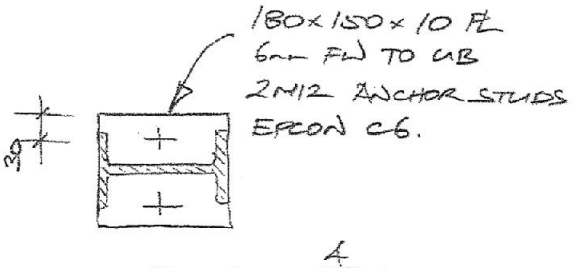

DETAIL 4/SK6

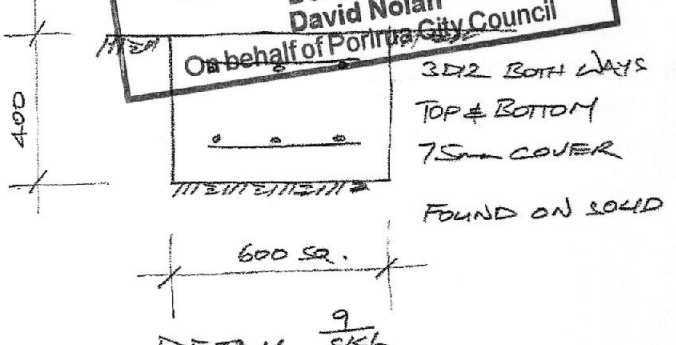

DETAIL 9/SK6

Porirua City Council
Approved Consent Document
24 NOV 2017
0560/17
BCA Number
David Nolan
On behalf of Porirua City Council

53 BANKS BOULEVARD

1721/SK7A.

STRUCTURAL DETAILS

1/7/17 DJ

A. 15/7/17 Footing detail added.

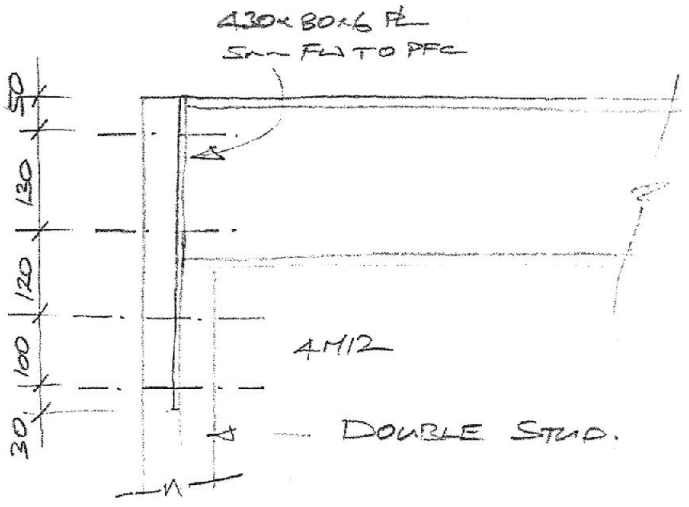

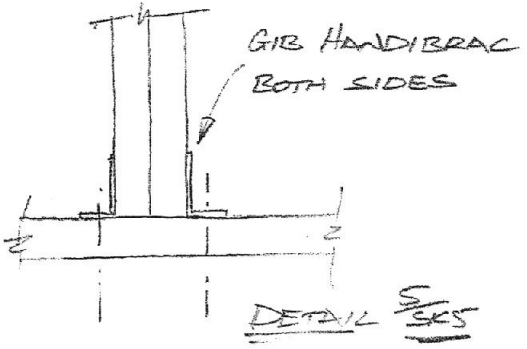

DETAIL 5/SK5

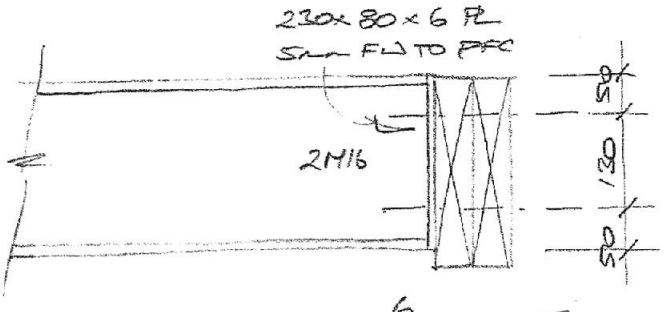

DETAIL 6/SK5

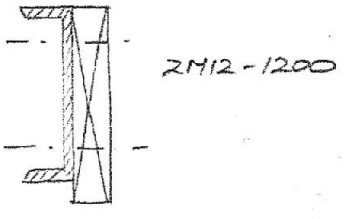

DETAIL 7/SK5

Porirua City Council
Approved Consent Document
24 NOV 2017
0560/17
BCA Number
David Nolan
On behalf of Porirua City Council

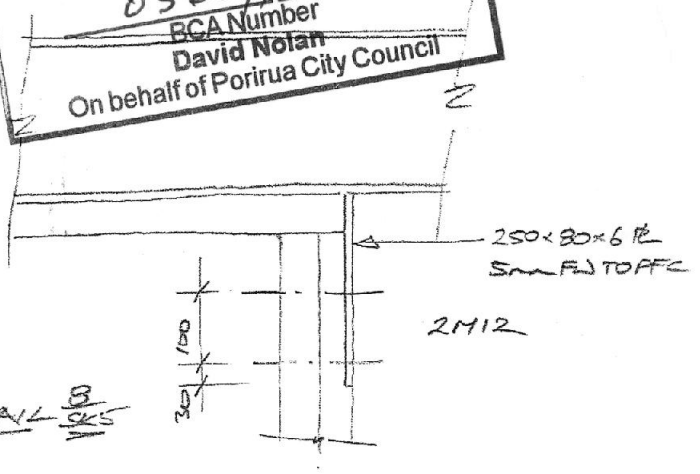

DETAIL 8/SK5

53 BANKS BOULEVARD

1721/SK8

STRUCTURAL DETAILS

1/7/17 DJ

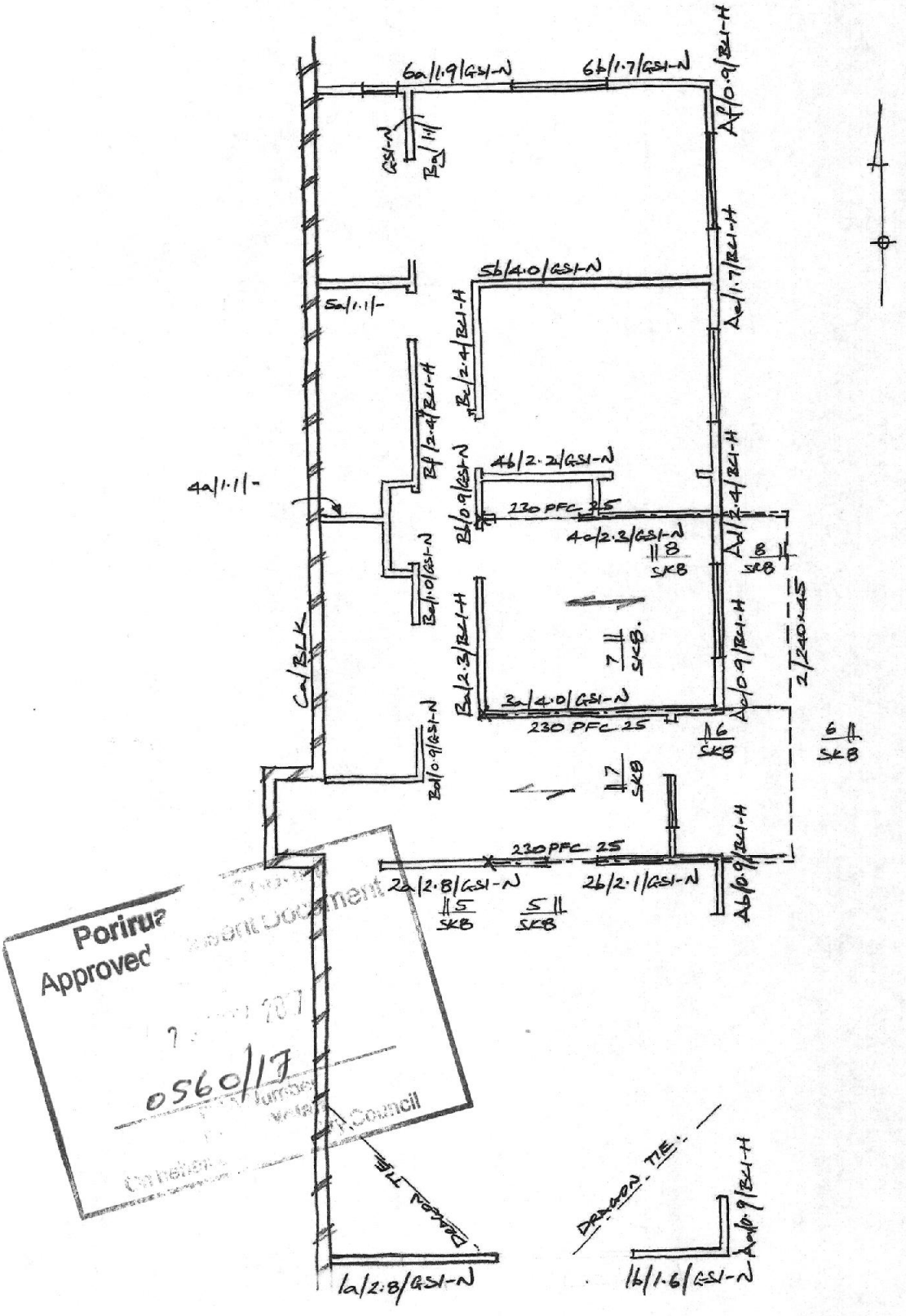

Porirua
Approved
0560/17
Council

LOWER LEVEL PLAN

53 BANKS BOULEVARD

1721/SK 5B.

STRUCTURAL DETAILS

26/6/17 DJ

A. 1/8/17 Bracing Aa + Ab amended.
B 2/8/17 Bracing 1a + 1b amended.

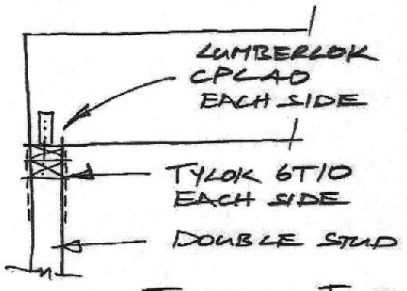

TYPICAL TIMBER BEAM FIXING.

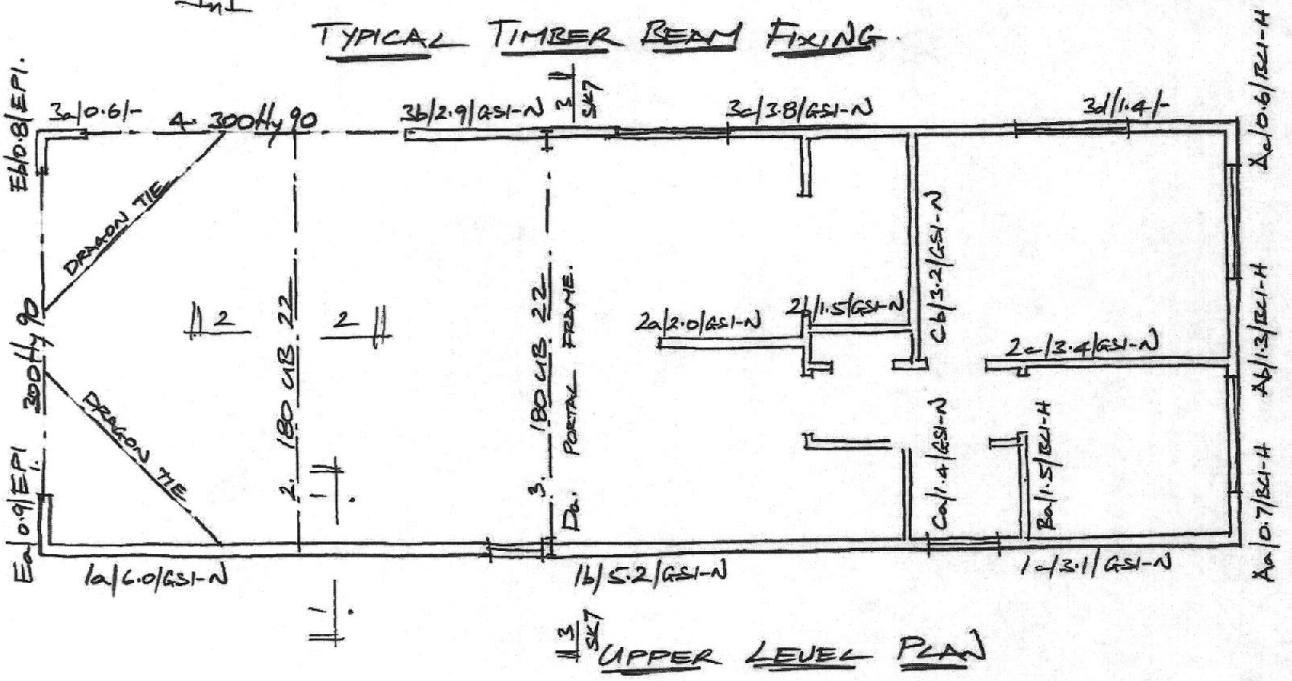

UPPER LEVEL PLAN

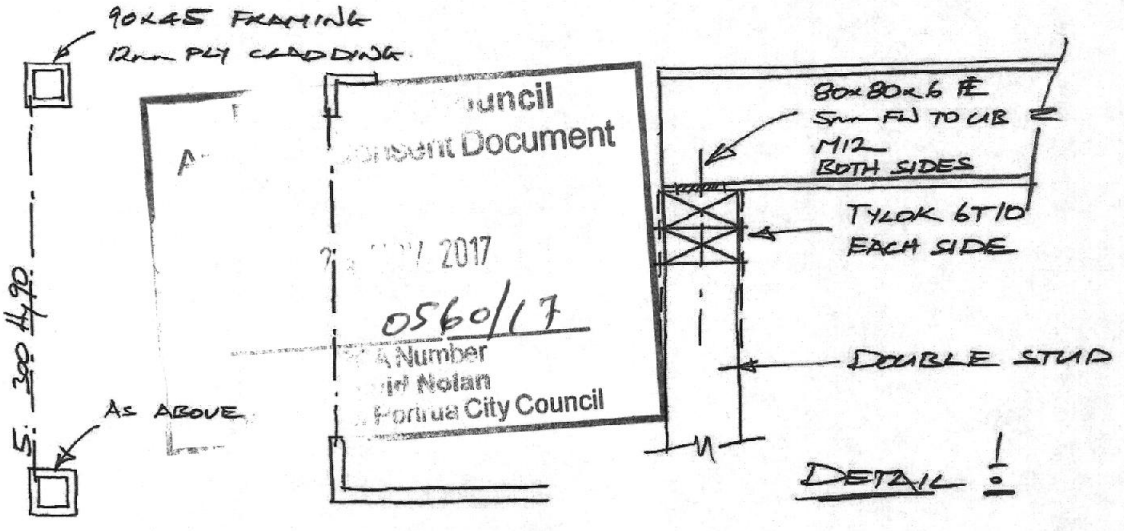

Council
Consent Document
2017
0560/17
Consent Number
Nolan
Franklin City Council

VERANDAH PLAN

53 BANKS BOULEVARD 1721/SK6

STRUCTURAL DETAILS 27/6/17

MiTek New Zealand Limited

Correspondence from : **AUCKLAND**
40 Neales Road, East Tamaki 2013
PO Box 58-014, Botany 2163
Phone: 09 274 7109
Fax: 09 274 7100

CHRISTCHURCH
14 Pilkington Way, Wigram 8042
PO Box 8387, Riccarton 8440
Phone: 03 348 8691
Fax: 03 348 0314

www.miteknz.co.nz

MiTek 20/20 Engineering 4.7.105.0

Printed: 15:33:58 11 Aug 2017

PRODUCER STATEMENT for MiTek 20/20® TRUSS DESIGN - Version 4.7

ISSUED BY: **MiTek New Zealand Limited**

TO: **Placemakers National Estimating Unit (NEU)**

IN RESPECT OF: **MiTek® Truss Designs**

This producer statement covers the MiTek 20/20® truss design and the structural performance of the GANG-NAIL® connector plate for the job reference **BL132470** and may be used by a Building Consent Authority to assist in determining compliance with the New Zealand Building Code.

The MiTek 20/20® truss design program has been developed by MiTek New Zealand Limited for the design of MiTek ® timber roof, floor and attic trusses in New Zealand. The truss designs computed by MiTek 20/20® are prepared using sound and widely accepted engineering principles, and in accordance with compliance documents of the New Zealand Building Code and Verification Method B1/VM1; and internationally accepted standard ANSI/TPI 1 - 2002 as an alternative solution, to satisfy the requirements of Clauses B1 and B2 of the New Zealand Building Code.

Porirua City Council
Approved Consent Document
24 NOV 2017
0560/17
BCA Number
David Nolan
Officer of Porirua City Council

On behalf of MiTek New Zealand Limited, and subject to:

i) All proprietary products meeting their performance specification requirements
ii) The provision of adequate roof bracing and overall building stability
iii) Correct selection and placement of GANG-NAIL connector plates
iv) Correct input of Truss Design Data as shown in the Fabricator Design Statement for this job
v) The design being undertaken by the accredited fabricator under the terms of the software licence
vi) Timber is graded to the requirements of NZS 3603:1993
vii) Minimum timber treatment for these MiTek® trusses shall be in accordance with B2/AS1 Table 1A and the relevant sections of NZS 3602:2003

I believe on reasonable grounds that the trusses, if constructed in accordance with the MiTek 20/20® truss design and shop drawings, will comply with the relevant provisions of the New Zealand Building Code.

MiTek New Zealand Limited holds a current policy of Professional Indemnity Insurance no less than $500,000.

On behalf of MiTek New Zealand Limited, **Date: Friday, August 11, 2017**

In Ling Ng, BE (Hons), CPEng, IntPE, MIPENZ (ID: 146585)
TECHNICAL SERVICES MANAGER, MiTek New Zealand Limited

Job: BL132470
Client:
Phone:
Site:
Description:
Building Consent No.:
Phone:
MiTek 20/20 Engineering 4.7.105.0
MiTek New Zealand Limited.
Printed: 15:33:58 11 Aug 2017

MITEK FABRICATOR DESIGN STATEMENT

This statement is issued by MiTek accredited fabricator **Placemakers National Estimating Unit (NEU)**, being licensed to use the MiTek 20/20® software, to the client listed above and may be used by the Building Consent Authority to assist in determining compliance with the New Zealand Building Code.

MiTek 20/20® TRUSS DESIGN DATA

The MiTek 20/20® computer design for this job is based on the following design parameters entered into the program. The Fabricator shall ensure that these job details are current and relevant to the project for the design of the MiTek ® trusses.

Job Details

Importance Level : 2

Design Working Life : 50 years

Roof Truss

Timber Group:	NEU-H1.2	Pitch:	4.0 deg	Nominal Overhang:	600 mm
Roof		**Ceiling**		**Wind**	
Material:	Galv Iron .5mm	Material:	Gib Board 13mm	Area:	High (44.0 m/s)
Dead Load:	0.210 kPa	Dead Load:	0.200 kPa	Pressure Coeff:	Cpe = varies; Cpi = -0.30, 0.20
Restraints:	900 mm centres	Restraints:	600 mm centres		
Live Load:	Qur = 0.250 kPa Qc = 1.100 kN	Live Load:	Qc = 1.400 kN		

The minimum timber treatment for these MiTek® trusses shall be in accordance with B2/AS1 Table 1A and the relevant sections of NZS 3602:2003. The timber for these MiTek ® trusses shall be graded to the requirements of NZS 3603:1993. Proprietary fixings and timber connectors shall be selected in accordance with NZS3604:2011 Section 4 - Durability.

MiTek® Truss List

Legend: * = detail only, ? = input only, ~~Txx~~ = failed design, Ø = non certified, Unmarked trusses = designed successfully, LB = lateral bracing required
GB = gable brace required

Truss	Qty	Span (mm)	Pitch (deg)	Spacing (mm)
ET01	2	6930	4.000	900
ET02	1D	6930	4.000	900
T01	16	6930	4.000	900

Total quantity : 19

The computer design input has been carried out by:

Signed: .....

Date: ...Friday, August 11, 2017....

Name of Detailer: vY VU

Qualifications and Title:

On behalf of:

Placemakers National Estimating Unit (NEU)
25 Vickery St, Te Rapa, Hamilton,
Phone:

Slab Thickening Details

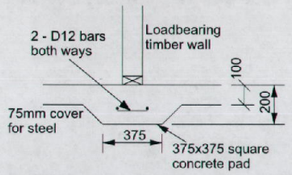

TYPE FP1 - 375x375mm Pad

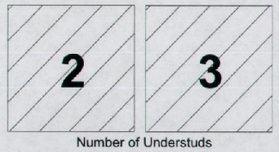

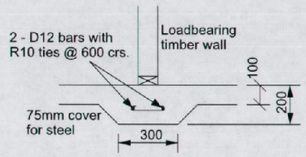

TYPE FS1 - 300mm Strip footing

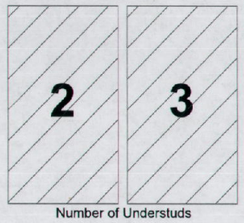

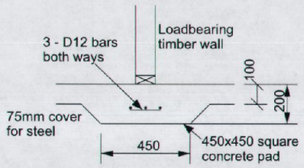

TYPE FP2 - 450x450mm Pad

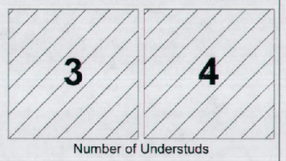

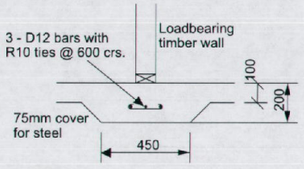

TYPE FS2 - 450mm Strip footing

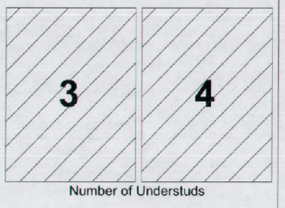

NOTES:

The numbers found within the hatched area are the number of studs required below each truss.
Refer to:
GANG-NAIL Internal Load Bearing on Concrete Floor Slabs brochure 10/2011

Layout is null and void if trusses not supplied by PlaceMakers

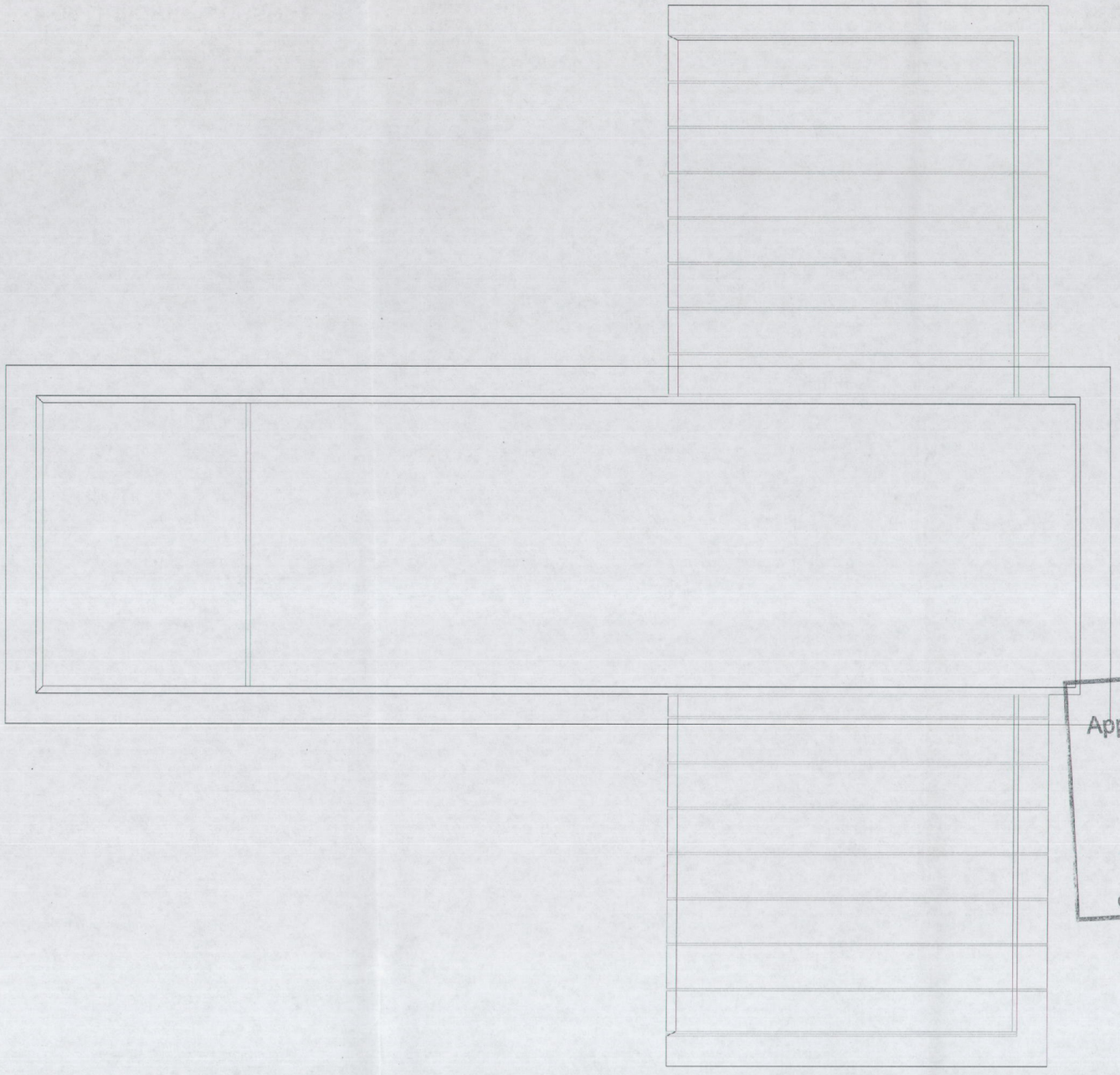

Porirua City Council
Approved Consent Document
24 NOV 2017
0560/17
BCA Number
David Nolan
On behalf of Porirua City Council

NO SLAB THICKENING REQUIRED

PlaceMakers®
Know how. Can do.

Site Address :
53 Banks Boulevard
Whitby, Porirua

Sheet Title :
For Building Consent
Slab Thickening

Date : 10 Aug,2017 | Drawn : Vy Vu
Scale : 1: 100 | System : MiTek 20/20

Job Details:

Roof Pitch	: 4.0 Deg	Truss Centres	: 900 mm
Roof Material	: Galv Iron .5mm	Roof Live Load	: 0.250kPa
Ceiling Material	: Gib Board 13mm	Floor Live Load	: kPa
Wind Zone	: High	Wind Speed	: 44.0 m/s
Roof Snow Load	: 0.000 kPa		

PrimeCad v4.7.105
MiTek™

Job Title : BL132470
Sheet : 2
Revision Number :

Layout is null and void if trusses not supplied by PlaceMakers

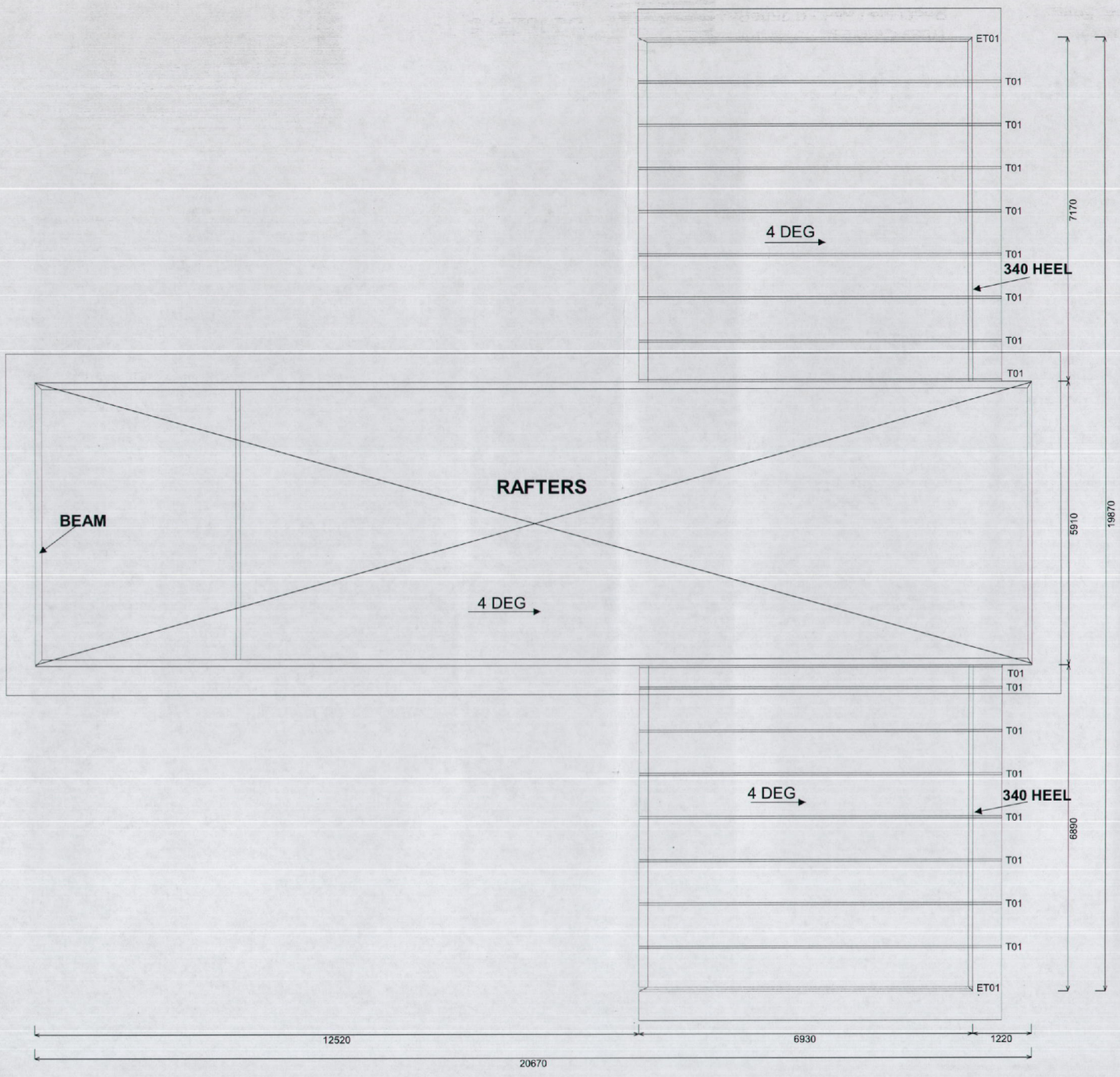

PlaceMakers®
Know how. Can do.

Site Address :
53 Banks Boulevard
Whitby, Porirua

Sheet Title :
For Building Consent
Buildable Truss Layout

Date : 10 Aug,2017 | Drawn : Vy Vu
Scale : 1: 100 | System : MiTek 20/20

Job Details:
Roof Pitch : 4.0 Deg
Roof Material : Galv Iron .5mm
Ceiling Material : Gib Board 13mm
Wind Zone : High
Roof Snow Load : 0.000 kPa

Truss Centres : 900 mm
Roof Live Load : 0.250kPa
Floor Live Load : kPa
Wind Speed : 44.0 m/s

PrimeCad v4.7.105

MiTek™

Job Title : BL132470
Sheet : 1
Revision Number :

Truss Fixings

X - LUMBERLOK JH47x90 Joist Hanger
Z - LUMBERLOK JH47x120 Joist Hanger
P - LUMBERLOK JH47x190 Joist Hanger
E - LUMBERLOK JH95x165 Joist Hanger
O - Pair of LUMBERLOK CT200 Ceiling Ties
H - LUMBERLOK CT400 Cyclone Tie
B - LUMBERLOK CT600 Cyclone Tie
M - Pair of LUMBERLOK Multi Grips
NP - LUMBERLOK Nailon Plate
N - LUMBERLOK N21 Diagonal Cleat
W - Pair of LUMBERLOK CPC40 Cleats
K - LUMBERLOK TTP 16kN Truss to Top Plate set
G - LUMBERLOK TTP 9kN Truss to Top Plate set

Layout is null and void if trusses not supplied by PlaceMakers

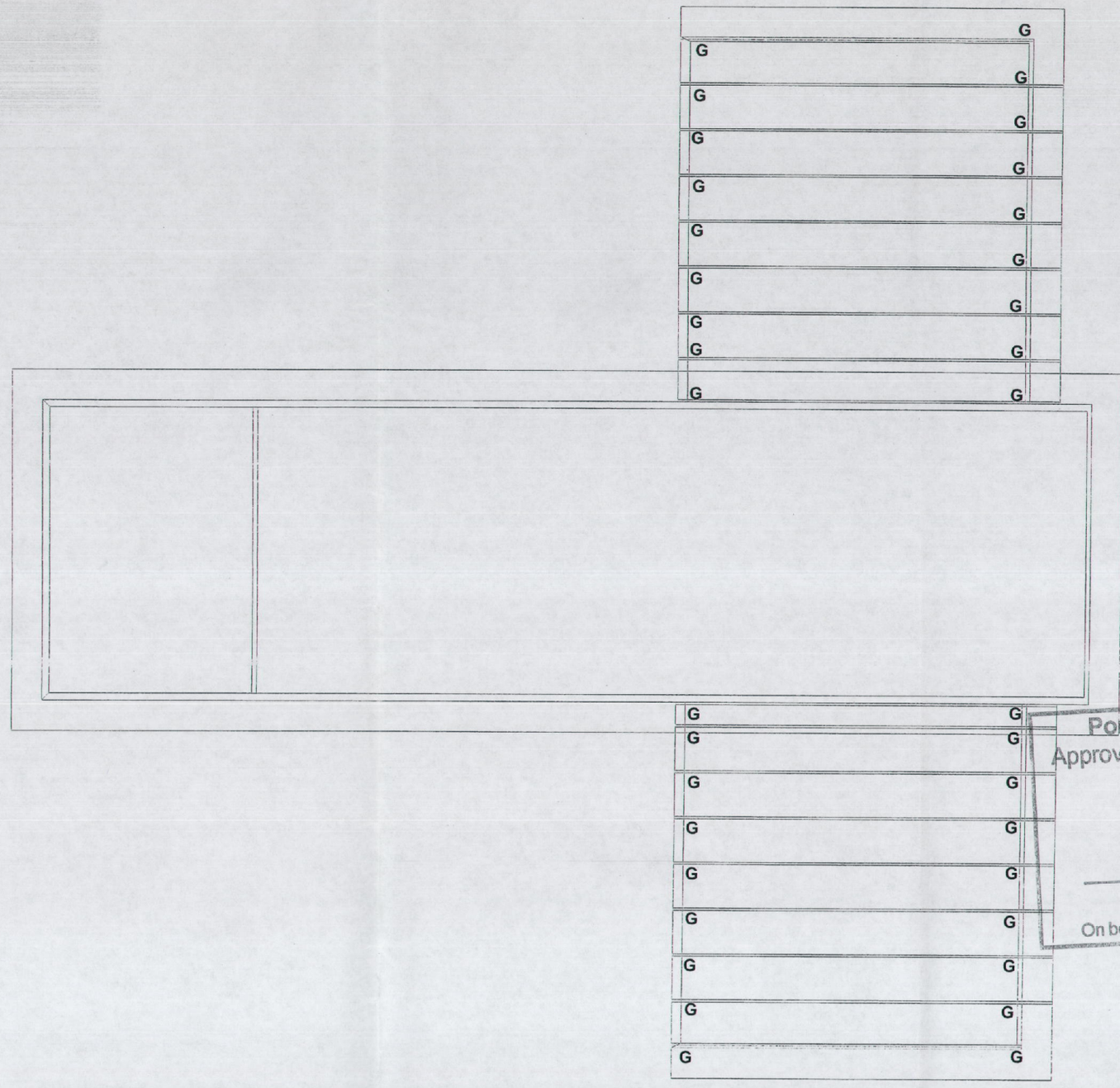

Porirua City Council
Approved Consent Document
24 NOV 2017
0560/17
BCA Number
David Nolan
On behalf of Porirua City Council

NOTES:

All other areas must have at the minimum
2/ 90x3.15mm skew nails + 2 wire dogs (4.7kN)
for truss to top plate connections.

Refer to:
LUMBERLOK Timber Connectors Characteristic
Loadings Data brochure 03/4

PlaceMakers®
Know how. Can do.

Site Address :
53 Banks Boulevard
Whitby, Porirua

Sheet Title :
For Building Consent
Truss Fixings

Date : 10 Aug,2017 | Drawn : Vy Vu
Scale : 1: 100 | System : MiTek 20/20

Job Details:
Roof Pitch : 4.0 Deg
Roof Material : Galv Iron .5mm
Ceiling Material : Gib Board 13mm
Wind Zone : High
Roof Snow Load : 0.000 kPa

Truss Centres : 900 mm
Roof Live Load : 0.250kPa
Floor Live Load : kPa
Wind Speed : 44.0 m/s

PrimeCad v4.7.105
MiTek™
Job Title : BL132470
Sheet : 3
Revision Number :

Design Navigator H1 Compliance Report

Project Summary

H1 Report created by:	
Project Name:	Timmins
Client:	Dave and Josie Timmins
Lot No:	
Comment:	
Project Id:	106178
Report Date:	06/11/2017

Compliance Result

This report shows compliance of the design with Clause H1 Fourth edition Amendment 3 from January 2017 and the R-value targets of Clause E3 Second edition Amendment 6 from January 2017.

This building complies with **H1** via the following methods:

- the Calculation Method in NZS4218:2009

Porirua City Council
Approved Consent Document
24 NOV 2017
0560/17
BCA Number
David Nolan
On behalf of Porirua City Council

H1 Compliance Details

NZS4218:2009 Calculation Method Compliance

The use of the Calculation Method is permitted .

In order to comply the Actual Heat Loss must be the same or smaller than the Reference Heat Loss AND all component R-values must be the same or larger than 50% of the R-values in the '50% Rule' table below. This design **complies** with the NZS4218:2009 Calculation Method.

HeatLoss:

Reference building	Proposed building
525	424

Minimum R-values ("50% rule"):

	Permitted Minimum	Proposed Minimum	
Floor:	0.65	1.06	✓
Non-solid Walls:	0.95	3.02	✓
Roof:	1.45	3.37	✓

53 Banks Boulevard.

BCA 0560/17

©Design Navigator Ltd
prepared for Dave and Josie Timmins

The Reference building has the following areas and R-values.

					Non-solid	Solid Timber	Other Solid
					100.0	0.0%	0.0%
Floor:	Area:	138	m²	R-values:	1.3	1.3	1.5
Walls excl. glazing:	Area:	171	m²	R-values:	1.9	1.2	1
Glazing (up to 30%):	Area:	73.3	m²	R-values:	0.26	0.26	0.26
Glazing (surplus of 30%):	Area:	0	m²	R-values:	0.4	0.34	0.31
Roof:	Area:	137	m²	R-values:	2.9	3.5	3.5
Heat Loss:					525	570	584

For mixed constructions the heat loss of the reference building is calculated as the sum of the heat losses for each type of wall construction multiplied by the fraction of the wall area of each type. This approach is based on clause 4.2.6 of NZS4218:2009. There are no skylights in the reference building. The reference building roof area is the sum of the proposed building roof and skylight areas.

Compliance with Clause E3

This building complies with the R-value targets in NZBC Clause E3 .

Component	Minimum R-value	Project R-value
Framed wall constructions with cavities	1.5	
Single skin masonry wall without a cavity	0.6	
Solid timber wall no less than 60 mm thick	0.6	
Roof or ceilings	1.5	

©Design Navigator Ltd
prepared for Dave and Josie Timmins

Design Details

Building Dimensions

Floor Area	138	m²
Gross Wall Area	244.2	m²
Net Wall Area	197.8	m²
Wall (North) Area	68.4	m²
Wall (East, South and West) Area	129.4	m²
Gross Roof Area	137	m²
Net Roof Area	135.6	m²
Glazing Area	47.9	m²
Window (North) Area	16	m²
Window (East, South and West) Area	30.4	m²
Skylight Area	1.4	m²

Glazing Areas

Total Vertical Glazing Percentage	19	%
East, South and West Window Percentage	19	%
Total over 30%	no	
East, South and West over 30%	no	
Total over 50%	no	
max. Skylight Area for Schedule Method	2.06	m²
Skylights over Schedule Method Limit	no	
Decorative Glazing	46.4	m²
Decorative Glazing over 3m²	yes	

Information required for BPI calculation

Living Floor Area	146	m² Note: This includes also internal floors.
Average Room Height	2.7	m
Thermal Mass Level	Heavy weight	Slab floor with substantial floor areas polished or tiled, some heavy mass solar facing walls.

Climate

Location	Wellington
Climate Zone	2

©Design Navigator Ltd
prepared for Dave and Josie Timmins

Heat Loss Details

	ID	Orient.	Width	Height	Gross Area	Net Area	R-value*	Heat Loss	Shad. Coeff.**	Solid Wall***
Floors										
Floor 1	Single lower flo				49.0	49.0	1.06	46.2		
Floor 2	2 Storey				39.0	39.0	1.16	33.6		
Floor 3	Single upper flo				50.0	50.0	1.06	47.2		
Walls										
Wall 1		N	7.0	5.3	37.1	33.6	3.02	11.1		C
Window 1-1			1.6	1.2		1.9	0.25	7.7	0.00	
Window 1-2			1.6	1.0		1.6	0.25	6.4	0.00	
Wall 2		N	8.6	3.3	28.4	18.6	3.02	6.2		C
Window 2-1			4.5	2.2		9.8	0.25	39.2	0.00	
Wall 3		E	6.0	5.3	31.8	22.6	3.02	7.5		C
Window 3-1			1.9	2.0		3.7	0.25	14.9	0.00	
Window 3-2			1.6	1.0		1.6	0.25	6.4	0.00	
Window 3-3			1.6	1.2		1.9	0.25	7.7	0.00	
Window 3-4			1.6	1.2		1.9	0.25	7.7	0.00	
Wall 4		E	7.3	2.7	19.7	15.9	3.02	5.3		C
Window 4-1			1.6	1.2		1.9	0.25	7.7	0.00	
Window 4-2			1.6	1.2		1.9	0.25	7.7	0.00	
Wall 5		S	7.0	5.3	37.1	34.2	3.02	11.3		C
Window 5-1			0.8	2.0		1.6	0.25	6.4	0.00	
Window 5-2			1.1	1.2		1.3	0.25	5.3	0.00	
Wall 6		S	8.6	3.3	28.4	26.9	3.02	8.9		C
Window 6-1			0.8	1.8		1.4	0.25	5.8	0.00	
Wall 7		W	7.0	3.3	23.1	10.0	3.02	3.3		C
Window 7-1			4.5	2.2		9.8	0.25	39.2	0.00	
Window 7-2			4.5	0.7		3.3	0.25	13.2	0.00	
Wall 8		W	7.3	2.7	19.7	19.7	3.02	6.5		C
Wall 9		N	7.0	2.7	18.9	16.2	3.02	5.4		C
Window 9-1			1.6	1.0		1.6	0.25	6.4	0.00	
Window 9-2			0.6	1.8		1.1	0.25	4.3	0.00	
Roofs										
Roof 1					137.0	135.6	3.37	40.2		
Skylight 1-1			1.2	1.2		1.4	0.25	5.8	0.00	
Total Heat Loss								424.2		

* Any concrete slab-on-ground floor regardless of its dimensions can be assumed to have an R-value of at least R-1.3 (H1/AS1 2.1.5).

** The Shading Coefficient is only required for BPI calculations.

*** C: Cavity Construction (any construction that is not solid), T: Solid Timber, S: Other Solid Construction (Note that the

©Design Navigator Ltd
prepared for Dave and Josie Timmins

Floor Construction Details

Name: Floortype 1

1.07 m²°C/W

Type: Floor: Slab floor

internal surface 0.09

Flooring :

none (Example: polished surface of a concrete floor)

R-value: 0.00

Slab Insulation

Slab floor area [m²]:	49
Perimeter length [m]:	28
External wall thickness [mm]:	90
Soil conductivity [W/m °C]	1.2
Underslab insulation:	none — Insulation :
Piles Footings: Number:	— Penetration Diameter: —
Slab edge insulation:	none — Insulation :

Name: Floortype 2

1.16 m²°C/W

Type: Floor: Slab floor

internal surface 0.09

Flooring :

none (Example: polished surface of a concrete floor)

R-value: 0.00

Slab Insulation

Slab floor area [m²]:	39
Perimeter length [m]:	20
External wall thickness [mm]:	90
Soil conductivity [W/m °C]	1.2
Underslab insulation:	none — Insulation :
Piles Footings: Number:	— Penetration Diameter: —
Slab edge insulation:	none — Insulation :

Name: Floortype 3

1.02 m²°C/W

Type: Floor: Slab floor

internal surface 0.09

Flooring : none (Example: polished surface of a concrete floor)

R-value: 0.00

Slab Insulation

Slab floor area [m²]:	49
Perimeter length [m]:	30
External wall thickness [mm]:	90
Soil conductivity [W/m °C]	1.2
Underslab insulation:	none — Insulation :
Piles Footings: Number:	Penetration — Diameter: —
Slab edge insulation:	none — Insulation :

Wall Construction Details

Name: Walltype 1

3.02 m²°C/W

Type: Wall: Timber frame with vented cavity

external surface 0.03

Cladding : Bevelled weatherboard with building paper

R-value: 0.28

Air Barrier : Building paper

R-value: 0.01

Timber Frame & Cavity : no framing (for example SIP Panels)

Wall Frame Area: 0.0%	*Cavity Area: 100.0%*
15-90mm vented cavity (all R-values on ext. side of cavity will be halved), R: 0.08	15-90mm vented cavity (all R-values on ext. side of cavity will be halved), R: 0.08
Framing : *R-value: 0.00*	Pink®Batts® Ultra R2.6 Wall 2.6
	still Airgap: none *R-value: 0.00*

Wall Lining : Gypsum plasterboard 10mm

R-value: 0.04

internal surface 0.09

Roof Construction Details

Name: Rooftype 1

3.37 m²°C/W

Type: Roof: Timber framed roof, suspended ceiling

external surface 0.03

Roofing : Corrugate iron with building paper

R-value: 0.01

Insulation :

Timber Frame & Cavity : no framing (for example SIP Panels)

Roof Frame Area: 0.0% | *Cavity Area: 100.0%*

Roof space (still air) 0.11 | Roof space (still air) 0.11

Framing : *R-value: 0.00* | Insulation : 3.2

air gap (between 50-200mm) 0.15

Roof Lining : Gypsum plasterboard 13mm

R-value: 0.06

internal surface 0.09

Recessed downlights

Ceiling Area [m²]: 137 Number of downlights: 35 Clearance from lamp holder side [m]: 0.05

VELUX®

TCR 014

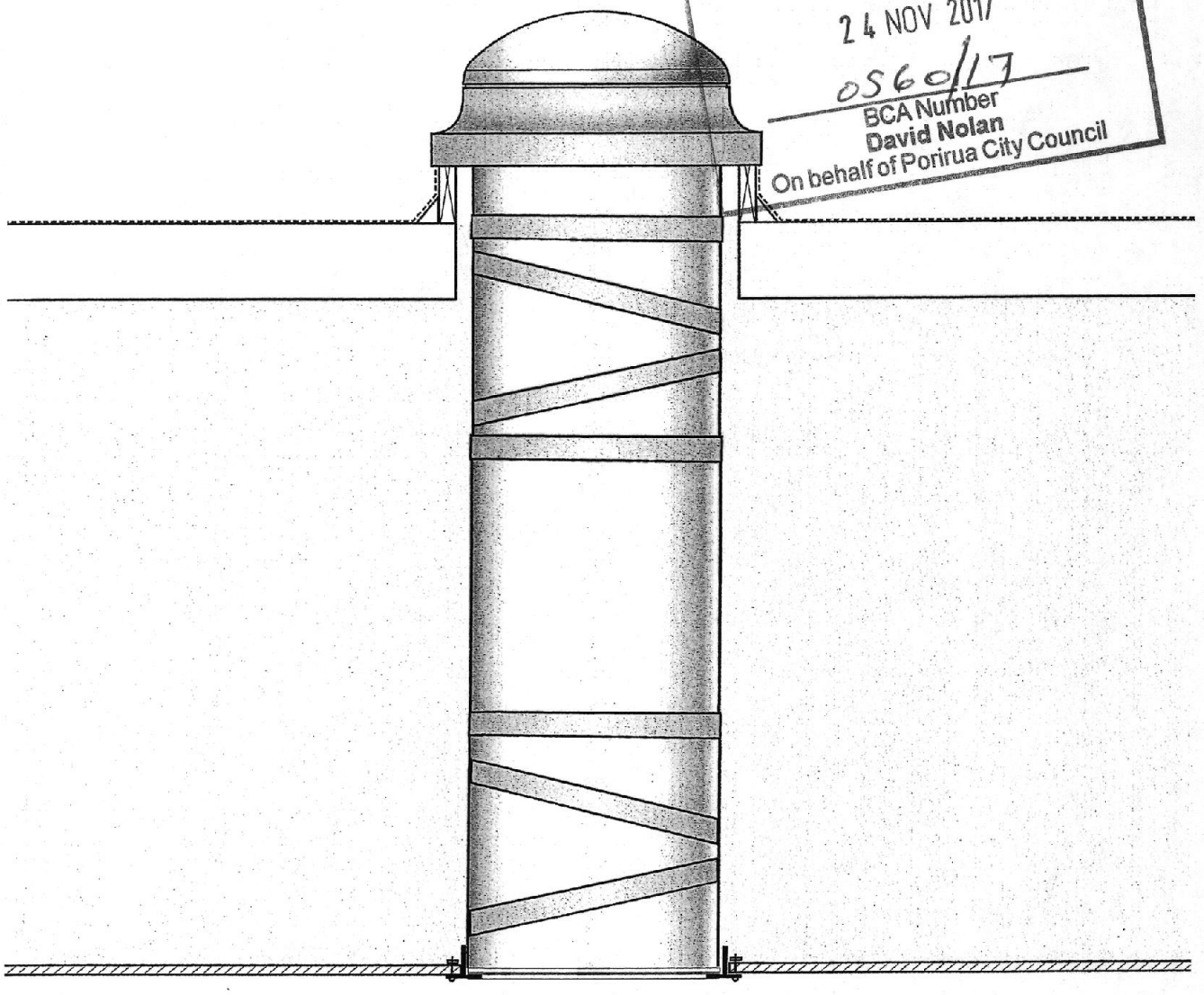

Porirua City Council
Approved Consent Document

24 NOV 2017

0560/17
BCA Number
David Nolan
On behalf of Porirua City Council

ENGLISH: Installation instructions for rigid sun tunnel TCR
ESPAÑOL: Instrucciones de instalación para túnel solar rígido TCR
FRANÇAIS : Instructions d'installation du tunnel de lumière rigide TCR

0°-60°

VAS 453125-2013-10

ENGLISH:

Read installation instructions carefully before proceeding.

VELUX rigid sun tunnel TCR is designed for curb mounted installation in roof pitches 0°-60° (0:12-7:12).

⚠ POTENTIAL FIRE HAZARD

During installation, the reflective tunnels and components of VELUX sun tunnels may focus sunlight causing intense heat or fire. Do not remove protective films until immediately before installation. Once protective films have been removed, do not leave tunnels or components unattended or place near combustible materials. Also, avoid skin burns.

Importance of proper installation

Satisfactory product performance depends on proper installation in accordance with these specific instructions. Seller accepts no responsibility for damages caused by improper installation as improper installation may void the warranties contained in the VELUX Promise. Seller accepts no responsibility whatsoever for failure of an installer to install VELUX sun tunnels in accordance with these installation instructions. Although VELUX sun tunnels are designed and manufactured to the highest standards, severe climatic exposure as well as adverse indoor conditions (ie high humidity) may produce temperature conditions which exceed product performance standards. In these cases, special preventive measures may be necessary. Seller reserves the right to implement product changes for improvement without prior notification.

Seller assumes no obligation whatsoever for failure of an architect, installer or building owner to comply with all applicable laws, ordinances, building codes and safety requirements.

ESPAÑOL:

Lea las instrucciones antes de comenzar.

El túnel solar rígido TCR de VELUX está diseñado para instalaciones montadas en brocal para techos con inclinación de 0°-60° (0:12–7:12).

⚠ POSIBLE RIESGO DE INCENDIO

Durante su instalación, es posible que la luz solar cause que los túneles reflectores de VELUX y componentes se calienten mucho o se incendien. No quite la película protectora hasta el momento de la instalación. Una vez haya quitado la película, no deje desatendidos los túneles ni los componentes, ni los coloque cerca de materiales que sean combustibles. También evite las quemaduras en la piel.

Importancia de una instalación correcta

El rendimiento satisfactorio del producto depende de la instalación correcta de acuerdo con estas instrucciones específicas. El proveedor no acepta responsabilidad alguna por daños causados por instalación inadecuada, y una instalación inadecuada puede invalidar las garantías contenidas en la Promesa VELUX. El proveedor no acepta responsabilidad alguna por instalaciones de túneles solares de VELUX que los instaladores no hayan hecho de acuerdo con estas instrucciones de instalación. Aunque los túneles solares de VELUX se han diseñado y fabricado para lograr los niveles de calidad más altos, la exposición a condiciones climáticas severas e incluso a condiciones interiores adversas (por ejemplo, humedad muy alta) puede producir niveles de temperatura que exceden las condiciones de desempeño del producto. En estos casos, puede ser necesario establecer medidas preventivas especiales. El proveedor se reserva el derecho a hacer modificaciones a los productos sin notificación previa con el fin de mejorarlos.

El proveedor no asume responsabilidad alguna por el incumplimiento de leyes, ordenanzas, normas de construcción o requisitos de seguridad por parte del arquitecto, instalador o propietario del edificio.

FRANÇAIS :

Lire attentivement les instructions avant de commencer.

Le tunnel de lumière rigide TCR de VELUX est conçu pour l'installation sur cadre pour les pentes de toit de 0° à 60° (0:12–7:12).

⚠ RISQUE D'INCENDIE POTENTIEL

Durant l'installation, les tunnels réfléchissants et les composantes du tunnel de lumière VELUX peuvent causer une chaleur intense ou un incendie causé par la lumière du soleil. N'enlever pas immédiatement les films protecteurs. Enlever ces films seulement avant l'installation des différentes composantes. Avant et pendant l'installation, ne laisser pas les tunnels ou les composantes sans surveillance ou à proximité de matériaux combustibles. Éviter également les brûlures corporelles.

L'importance d'une bonne installation

La qualité de l'installation influence le rendement du produit selon ces instructions spécifiques. Le vendeur n'accepte aucune responsabilité pour les dommages résultants d'une installation inadéquate, et une installation inadéquate pourrait annuler les stipulations de la garantie énoncées dans la Promesse de VELUX. Le vendeur n'accepte en aucune façon la responsabilité d'une installation inadéquate de la part de l'installateur conformément aux instructions d'installation de VELUX. Malgré le fait que les tunnels de lumière VELUX répondent aux normes les plus rigoureuses de fabrication, il se peut que certaines conditions climatiques particulièrement sévères, à l'intérieur (ex. humidité) comme à l'extérieur, affectent la performance du produit. Dans de tels cas, des mesures préventives peuvent se révéler nécessaires. Le vendeur se réserve le droit d'apporter des changements sans préavis à ses produits dans le but de les améliorer.

Le vendeur n'assume aucune responsabilité, quelle qu'elle soit, dans le cas où un architecte, un installateur ou un propriétaire n'observe pas les règlements de la loi qui sont applicables, les normes du code du bâtiment et de sécurité.

Planning

Planificación

Planification

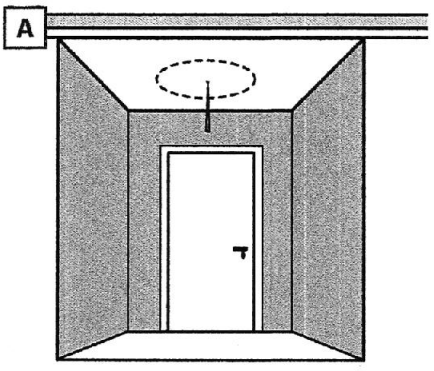

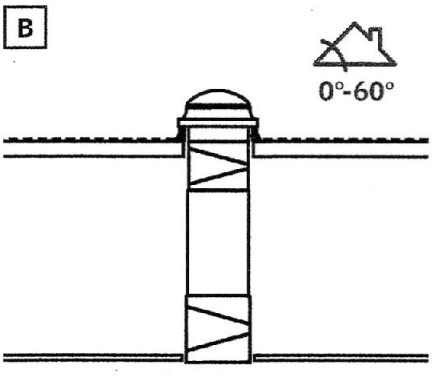

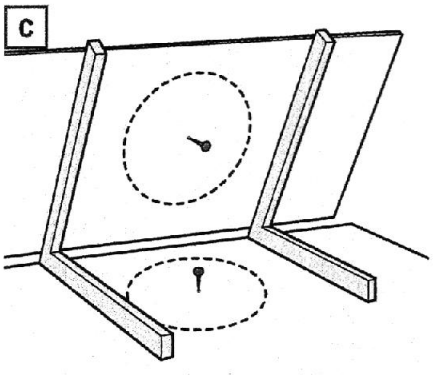

ENGLISH:

A Decide desired location of the sun tunnel and mark the location with a wire so that it can be seen from the attic.

B For optimal performance keep the sun tunnel as short and straight as possible.
Note: Tunnel length should not exceed 20 ft. (6 m). Exposure to the sun provides more light.

For rigid sun tunnel assemblies, it is generally recommended to secure transmittance of loads to the roofing structure by using suspension kit ZTZ 203.

C Check that the attic space and roof is clear of all obstructions before beginning the installation. In between the framing members, mark the center of the sun tunnel by tapping a nail through the ceiling and through the roof.

To estimate the length of the tunnel, measure from ceiling to top of curb and add 5" (125 mm) for fitting the tunnel into the flashing and minimum 1½" (40 mm) for each additional joint.

ESPAÑOL:

A Decida la localización deseada para el túnel solar y márquela con un cable para que se pueda ver desde el ático.

B Para función óptima mantenga el túnel solar tan corto y derecho como sea posible.
Nota: La longitud del túnel no debe superar los 20 pies (6 m). La exposición al sol suministra más luz.
Para montajes de túneles solares rígidos, generalmente se recomienda asegurar la transmisión de carga a la estructura del techo mediante el kit de suspensión ZTZ 203.

C Verifique que el espacio del ático y techo estén libres de obstrucciones antes de comenzar la instalación. Entre las partes del marco marque el centro del túnel solar con un clavo en el cielo raso y en el techo.

Para estimar la longitud del túnel, mida desde el cielo raso hasta el extremo superior del brocal y añada 5" (125 mm) para instalar el túnel en el tapajuntas y como mínimo 1½" (40 mm) por cada junta adicional.

FRANÇAIS :

A Déterminer l'emplacement souhaité pour l'installation du tunnel de lumière et marquer l'emplacement à l'aide d'un câble de façon à ce qu'il soit visible du grenier.

B Pour un rendement optimal, privilégier une installation du tunnel de lumière en ligne droite sur courte distance.
Note : La longueur de tunnel ne doit pas excéder 20 pieds (6 m). L'exposition au soleil procure une plus grande luminosité.
Pour l'assemblage d'un tunnel de lumière rigide, il est généralement recommandé d'assurer le transfert de poids de la structure à la toiture en ajoutant la trousse de suspension ZTZ 203.

C Vérifier que l'entretoit et le toit sont exempts de toute obstruction avant de commencer. Entre les éléments de structure, fixer un clou dans le plafond et dans le toit pour marquer le centre de l'emplacement du tunnel de lumière.

Pour estimer la longueur du tunnel, mesurer la distance entre le plafond et le bord supérieur du cadre et ajouter 5" (125 mm) afin de bien installer le tunnel avec le solin et ajouter un minimum de 1½" (40 mm) pour chaque joint supplémentaire.

3

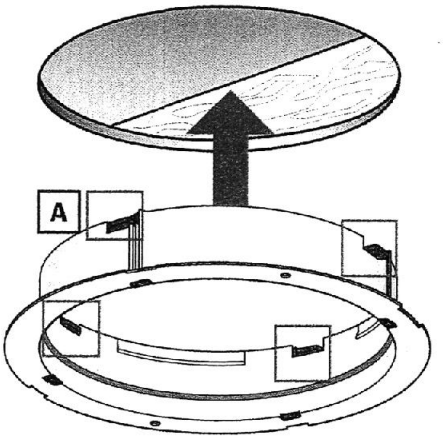

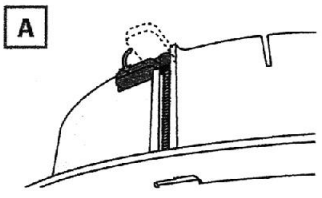

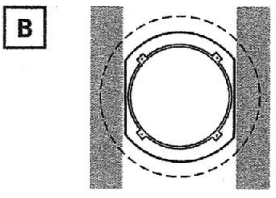

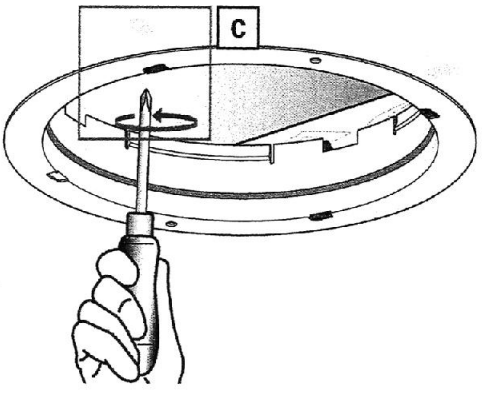

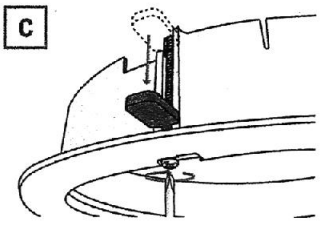

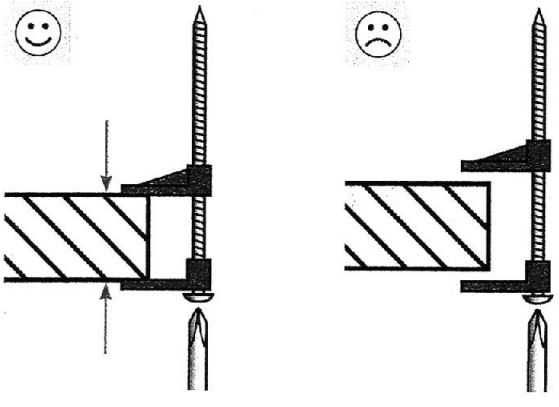

ENGLISH: Tip the plastic pins down into hidden position A. Insert the ceiling ring. Avoid distortion of the ceiling ring causing the diffuser not to fit smoothly B.
Secure the ceiling ring, insuring a tight joint between the ceiling ring and the ceiling C.
Note: Be careful not to damage parts if using power tools.

ESPAÑOL: Gire los pasadores plásticos hasta que queden ocultos A. Inserte el anillo del cielo raso. Evite la distorsión del anillo del cielo raso que puede provocar que el difusor no encaje correctamente B. Ajuste el anillo del cielo raso y asegúrese de que la unión entre el anillo y el cielo raso sea estanca C.
Nota: Tenga cuidado de no causar daño a las partes si usa herramientas eléctricas.

FRANÇAIS : Rabattre les pièces de plastique dans une position cachée A. Insérer l'anneau de plafond. Éviter de trop serrer l'anneau de plafond assurant ainsi une installation adéquate du diffuseur B. Serrer l'anneau de plafond de façon à ce qu'il soit bien ajusté au plafond C.
Note : Prudence lors de l'utilisation d'outils électriques afin de ne pas endommager les pièces.

1

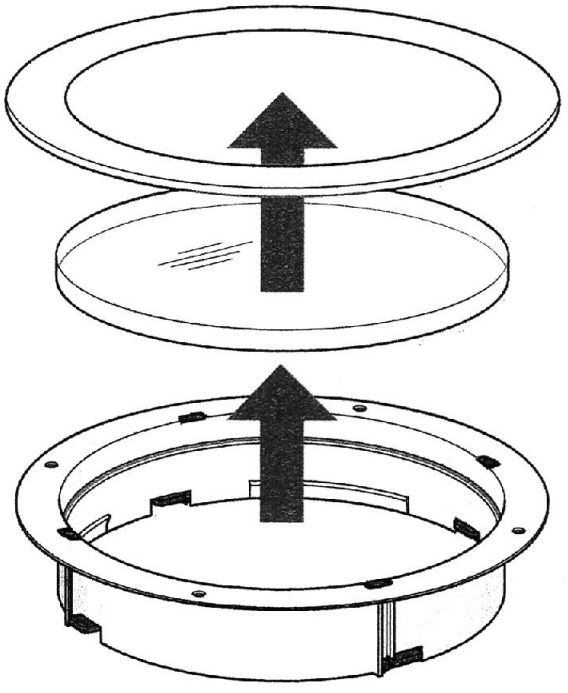

ENGLISH: Carefully remove the other parts from the ceiling ring. Rotate trim ring to disengage.

ESPAÑOL: Con mucho cuidado, quite las otras partes del anillo del cielo raso. Gire el anillo de terminación para soltarlo.

FRANÇAIS : Désassembler délicatement les différentes composantes de l'anneau de plafond. Effectuer une rotation de l'anneau de finition pour dégager.

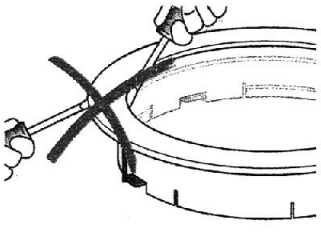

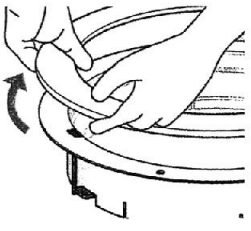

2

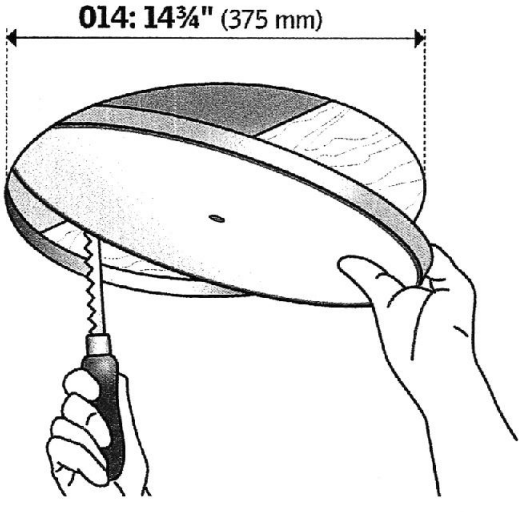

ENGLISH: From the inside, locate the nail indicating the center of the sun tunnel in the ceiling, mark circle and cut rough opening in the ceiling as shown.

ESPAÑOL: Desde adentro, localice el clavo que indica el centro del túnel solar en el cielo raso, marque el círculo y corte un hueco en el cielo raso como se indica.

FRANÇAIS : De l'intérieur, repérer le clou indiquant le centre de l'emplacement du tunnel de lumière dans le plafond, dessiner le contour du cercle et découper, tel qu'illustré.

6

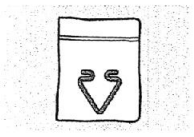

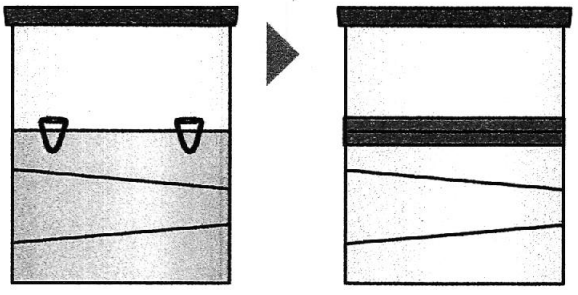

ENGLISH: Attach the upper elbow to the top collar. Secure joints with tunnel clips and tape provided.

ESPAÑOL: Sujete el codo superior al collar superior. Asegure las juntas con los sujetadores del túnel y con cinta suministrados.

FRANÇAIS : Apposer le coude supérieur au collet réflectif supérieur. Fixer solidement les joints avec les attaches de tunnel et poser le ruban fournies.

7

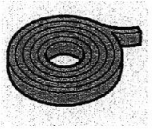

ENGLISH: Attach pile gasket to lower elbow as shown.

ESPAÑOL: Sujete la empaquetadura al codo inferior, como se indica.

FRANÇAIS : Apposer le cordon d'étanchéité au coude inférieur, tel qu'illustré.

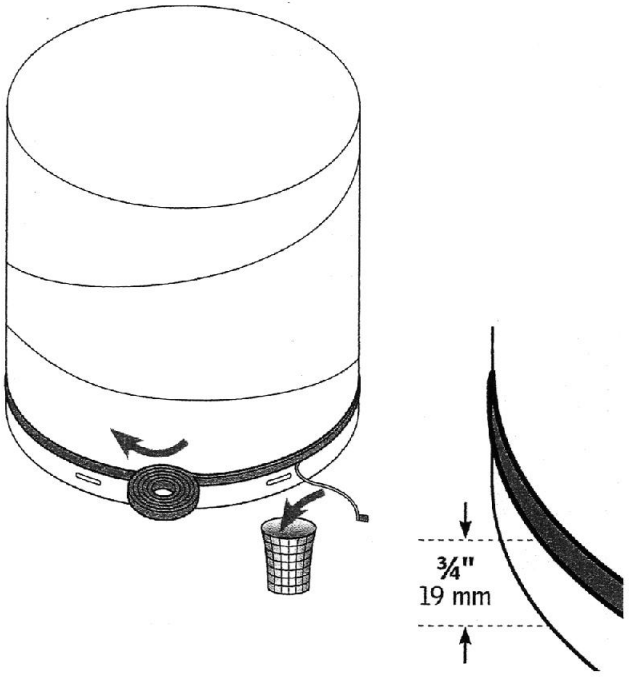

4

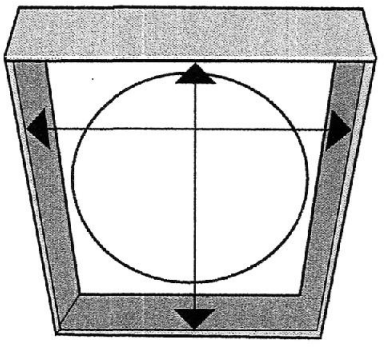

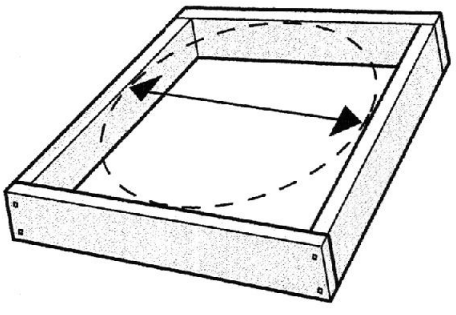

ENGLISH: To make the flashing fit properly on the curb, the curb and roofing material dimensions must be less than the flashing clearance, i.e. 20⅞" x 20⅞" (530 mm x 530 mm).

To install tunnel sections through the curb, inside curb dimensions must be no less than 16¾" x 16¾" (425 mm x 425 mm).

Ensure that the height of the curb is in accordance and compliance with the local building code. To ensure a weathertight installation: Flash the curb with weathertight material up to curb's upper edge. Flashing is not included.

ESPAÑOL: De manera que del tapajuntas encaje correctamente en el brocal, tanto las medidas del material de techo como las del brocal deben ser menor que el espacio libre dejado por del tapajuntas, es decir 20⅞" x 20⅞" (530 mm x 530 mm).

Para instalar las secciones del túnel a través del brocal, las medidas dentro del brocal deben ser no menos de 16¾" x 16¾" (425 mm x 425 mm).

Asegure que la altura del brocal esté de acuerdo y conforme al código local de construcción. Para asegurar una instalación resistente a la intemperie: Cubra el brocal hasta arriba con material resistente a la intemperie. Tapajuntas no suministrado.

FRANÇAIS : Pour installer correctement le solin sur le cadre, les dimensions du cadre et du matériel de toit doivent être inférieures à celles du jeu du solin, c'est-à-dire 20⅞" x 20⅞" (530 mm x 530 mm).

Pour installer les sections du tunnel en passant par le cadre, les dimensions de l'intérieur du cadre doivent être égales ou supérieures à 16¾" x 16¾" (425 mm x 425 mm).

S'assurer que la hauteur du cadre est conforme au code du bâtiment local. Pour assurer une installation étanche : Recouvrir d'un solin le cadre avec un matériel étanche jusqu'au bord supérieur du cadre. Le solin n'est pas inclus.

5

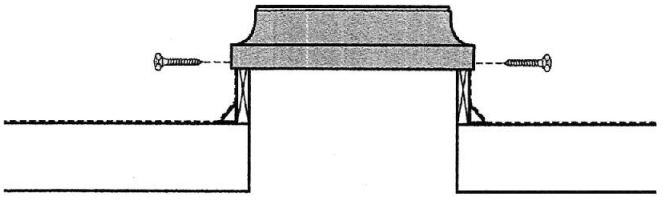

ENGLISH: Install and secure the flashing with 1½" (40 mm) screws provided.
Note: Attachment of the flashing to the curb can be postponed to the very last step. This will limit attic access and allow the complete sun tunnel assembly to be installed from the outside.

ESPAÑOL: Instale y asegure del tapajuntas con los tornillos de 1½" (40 mm) suministrados.

Nota: La sujeción del tapajuntas al brocal puede dejarse para el final. Esto limitará acceso al ático y permitirá la instalación por completa del conjunto de túnel solare desde afuera.

FRANÇAIS : Installer et fixer le solin en utilisant les vis de 1½" (40 mm) fournies.
Note : La fixation du solin au cadre peut être reportée à la fin. Cela limitera la nécessité d'accéder au grenier et permettra d'installer de l'extérieur tout l'assemblage du tunnel de lumière .

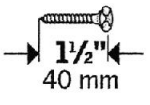

ENGLISH:

Contents of packaging:

1. Dome
2. Flashing
3. Top collar with pivot ring
4. Upper elbow
5. Rigid tunnel section (additional rigid tunnel sections are available)
6. Lower elbow
7. Ceiling ring
8. Diffuser
9. Trim ring

Plastic bag:

- Screws
- Tape
- Pile gasket
- Tunnel clips

ESPAÑOL:

Contenido del paquete:

1. Cúpula
2. Tapajuntas
3. Collar superior con anillo pivotal
4. Codo superior
5. Sección de túnel rígido (secciones de túneles rígidos adicionales disponibles)
6. Codo inferior
7. Anillo del cielo raso
8. Difusor
9. Anillo de terminación

Bolsa plástica:

- Tornillos
- Cinta
- Empaquetadura de felpa
- Sujetadores para túnel

FRANÇAIS :

Contenu de l'emballage :

1. Dôme
2. Solin
3. Le collet réflectif supérieur avec anneau pivotant
4. Coude supérieur
5. Section de tunnel rigide (sections de tunneles rigides additionnels disponibles)
6. Coude inférieur
7. Anneau de plafond
8. Diffuseur
9. Anneau de finition

Sac de plastique :

- Vis
- Ruban
- Cordon d'étanchéité
- Attaches du tunnel

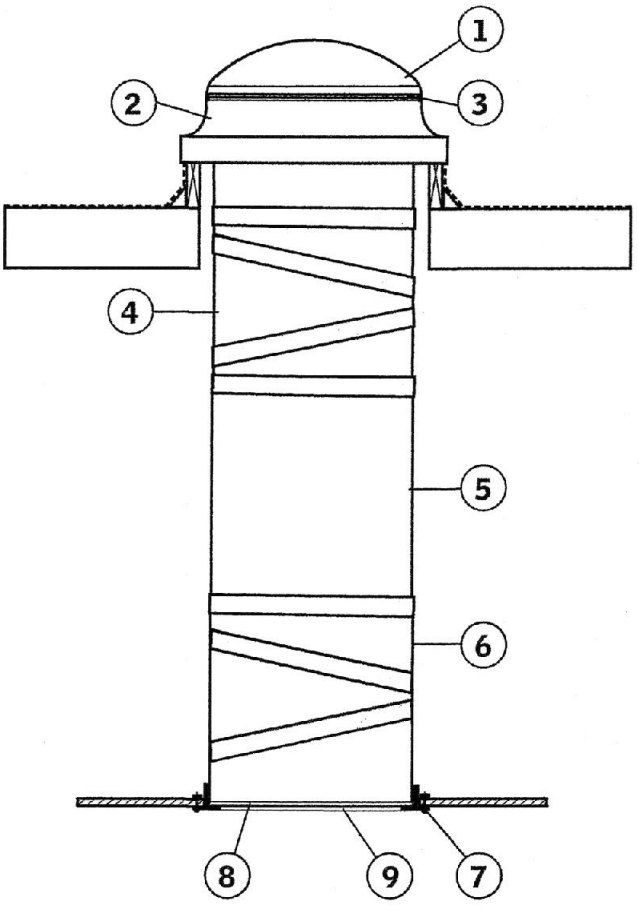

8

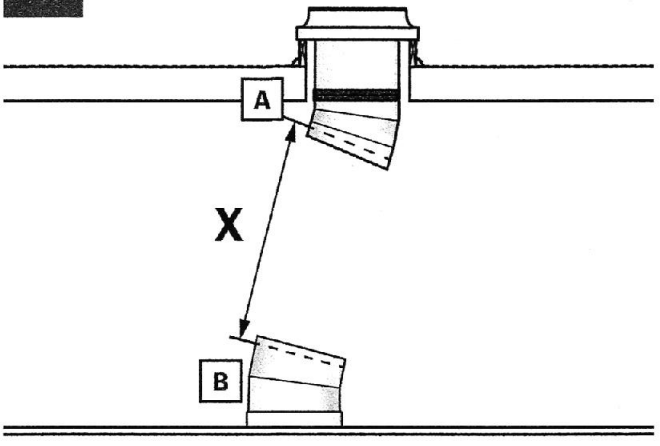

ENGLISH: Adjust the angle of both elbows so that they point directly against each other A, B. Elbows can be damaged if excess force is applied.
Determine the overall length of the rigid tunnel section. Include minimum 2" (50 mm) to overlap the elbows and minimum 1½" (40 mm) for each additional rigid tunnel section.

ESPAÑOL: Ajuste el ángulo de ambos codos de manera que apunten el uno directamente al otro A, B. Los codos se pueden dañar si se usa fuerza excesiva.
Determine la longitud total del conjunto del túnel rígido. Incluya un mínimo 2" (50 mm) para superponer los codos y un mínimo 1½" (40 mm) por cada sección adicional de túnel rígido.

FRANÇAIS : Ajuster l'angle des deux coudes de sorte qu'ils pointent directement l'un vers l'autre A, B. Les coudes peuvent être endommagés si une force excessive est appliquée.
Déterminer la longueur totale de l'assemblage de la section de tunnel, en incluant un minimum de 2" (50 mm) de chevauchement pour les coudes et un minimum de 1½" (40 mm) pour chaque section de tunnel rigide additionnel.

A

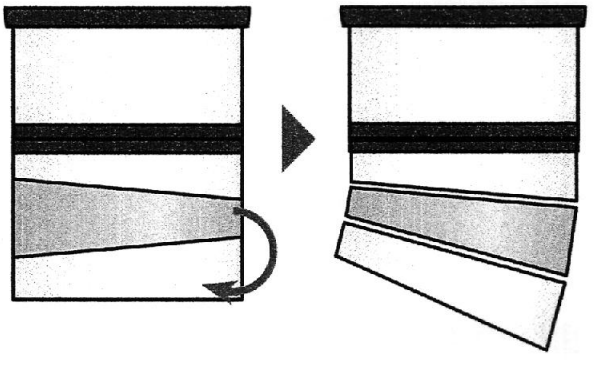

B

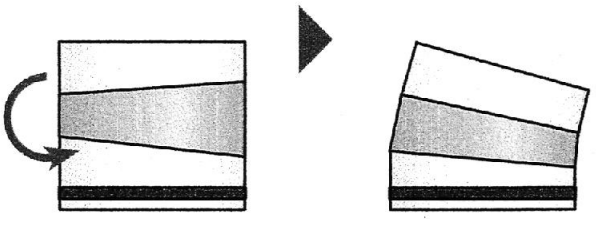

11 A

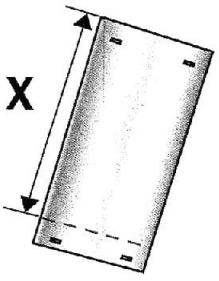

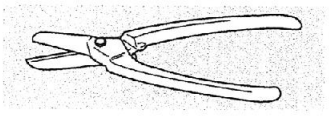

ENGLISH: If necessary, cut the rigid tunnel section to length **(A)**. Additional tunnel sections can be overlapped to form a telescoping tunnel section. Secure joints with two of the 3/8" (10 mm) screws **(B)**.

ESPAÑOL: Si fuera necesario, corte la sección de túnel rígido de acuerdo con la longitud necesaria **(A)**.
Pueden superponerse secciones de túnel para formar una sección de túnel telescópica. Asegure las juntas con dos de los tornillos de 3/8" (10 mm) **(B)**.

FRANÇAIS : Si nécessaire, couper la section de tunnel rigide à la longueur désiré **(A)**.
Des sections de tunnel supplémentaires peuvent être emboîtées pour former une section de tunnel télescopique. Fixer les joints avec les deux vis de 3/8" (10 mm) **(B)**.

ZTR **B**

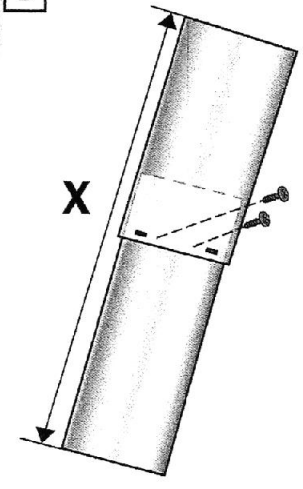

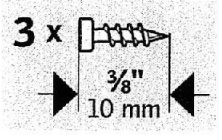

12

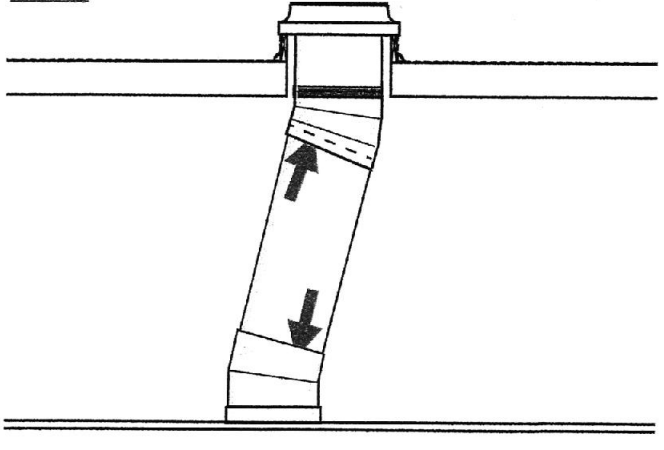

ENGLISH: Install tunnel assembly.

ESPAÑOL: Instale el conjunto del túnel.

FRANÇAIS : Installer l'assemblage du tunnel.

9

ENGLISH: Remove protective film from the rigid tunnel section.

ESPAÑOL: Quite la película protectora de la sección de túnel rígido.

FRANÇAIS : Retirer le film protecteur de la section de tunnel rigide.

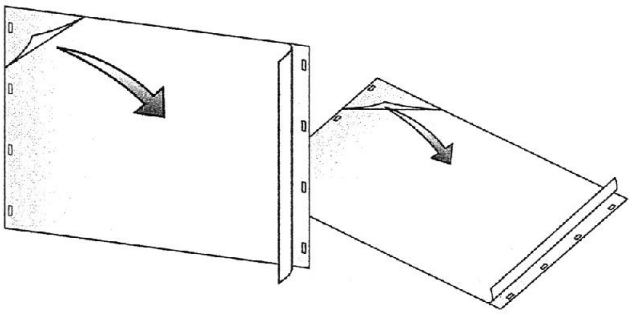

10

ENGLISH: Assemble the rigid tunnel section with clips provided.
Note: For longer sun tunnels, use VELUX rigid tunnel sections type ZTR assembled in the same way. Length of tunnel should not exceed 20 ft. (6 m).

ESPAÑOL: Arme la sección de túnel rígido con los sujetadores suministrados.
Nota: Para túneles solares más largos, use las secciónes de túnel rígido VELUX tipo ZTR armadas de la misma manera. La longitud del túnel no debe exceder 20 pies (6 m).

FRANÇAIS : Assembler la section de tunnel rigide avec des attaches de tunnel fournies.
Note : Pour allonger les tunnels de lumière utiliser le tunnel rigide de type ZTR de VELUX et assembler de la même façon. Le tunnel ne devrait pas avoir une longueur de plus de 20 pieds (6 m).

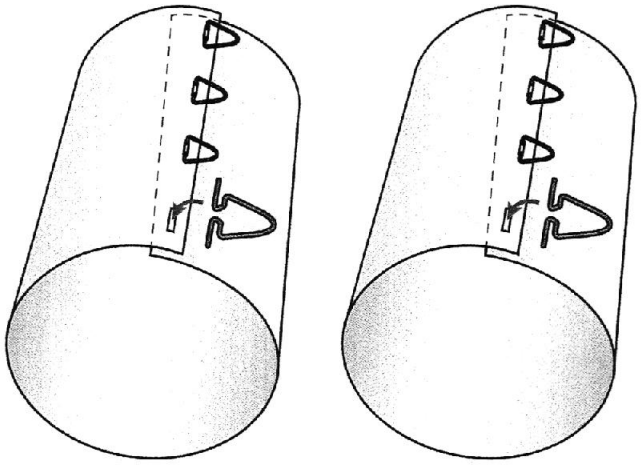

16

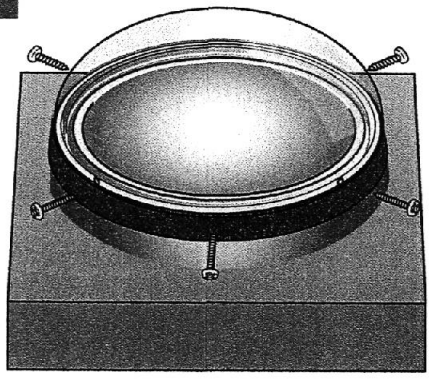

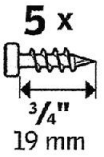

ENGLISH: Align holes; install and secure the dome with the ¾" (19 mm) screws provided. Do not overtighten the screws.
Note: If installing energy kit ZTC, use instructions enclosed with the kit. Optional dome edge protection ring ZZZ 192 is available for fire rated roofs.

ESPAÑOL: Alinee los agujeros e instale y asegure la cúpula con los tornillos de ¾" (19 mm) suministrados. No apriete demasiado los tornillos.
Nota: Si va a instalar el kit de energía ZTC, consulte las instrucciones incluidas en el kit. Opcional: anillo de protección del borde de la cúpula ZZZ 192 está disponible para techos con clasificación contra incendio.

FRANÇAIS : Aligner les ouvertures, installer et fixer le dôme à l'aide des vis de ¾" (19 mm) fournies. Ne pas serrer les vis de façon excessive.
Note : Si vous installer la trousse énergétique ZTC, utiliser les instructions d'installation inclus. Anneau de protection ZZZ 192 pour bordure de dôme offert en option pour répondre aux normes de protection contre les incendies.

17

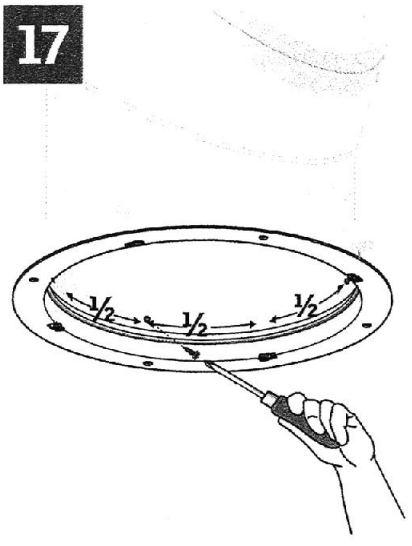

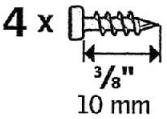

ENGLISH: Secure tunnel assembly to ceiling ring with four of the ⅜" (10 mm) screws provided.

ESPAÑOL: Asegure el montaje del túnel al anillo del cielo raso con cuatro de los tornillos de ⅜" (10 mm) suministrados.

FRANÇAIS : Sécuriser l'assemblage du tunnel à l'anneau de plafond avec quatre des vis de ⅜" (10 mm) fournies.

18

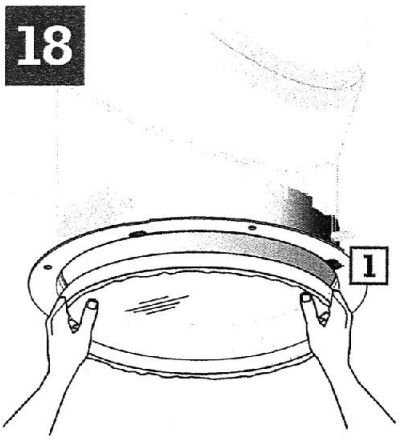

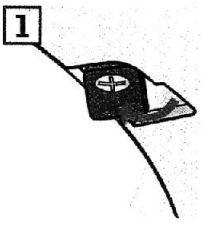

ENGLISH: Install the diffuser with the frosted side facing down. Secure the diffuser by rotating the plastic locks into locked position 1.
Note: If installing energy kit ZTC, use instructions enclosed with the kit.

ESPAÑOL: Instale el difusor con la parte esmerilada hacia abajo. Asegure el difusor girando las cerraduras plásticas hasta que cierren en posición 1.
Nota: Si va a instalar el kit de energía ZTC, consulte las instrucciones incluidas en el kit.

FRANÇAIS : Installer le diffuseur avec le côté givré vers le bas. Verrouiller le diffuseur en place à l'aide des verrous de plastique, tel qu'illustré 1.
Note : Si vous installer la trousse énergétique ZTC, utiliser les instructions d'installation inclus.

13

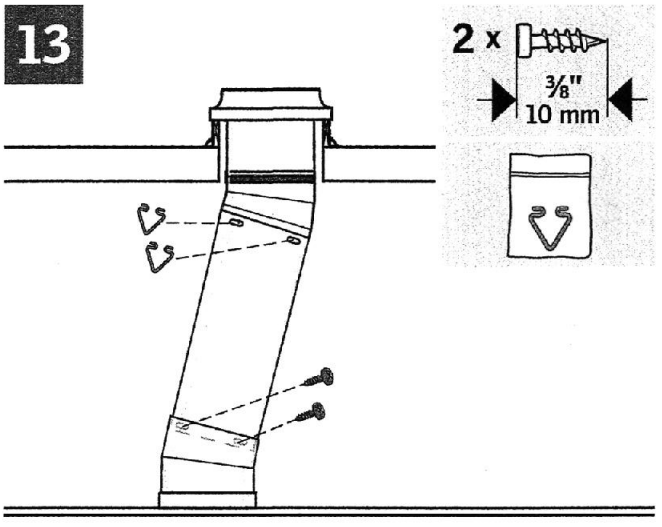

ENGLISH: Connect tunnel assembly with the clips supplied. If tunnel section was trimmed or holes do not align, use the screws supplied.

ESPAÑOL: Conecte el conjunto del túnel con los sujetadores suministrados. Si se recortó la sección de túnel o los orificios no están alineados, use los tornillos suministrados.

FRANÇAIS : Relier l'assemblage du tunnel avec les attaches de tunnel fournies. Si la section de tunnel a été taillé ou les trous ne s'alignent pas, utiliser les vis inclus.

14

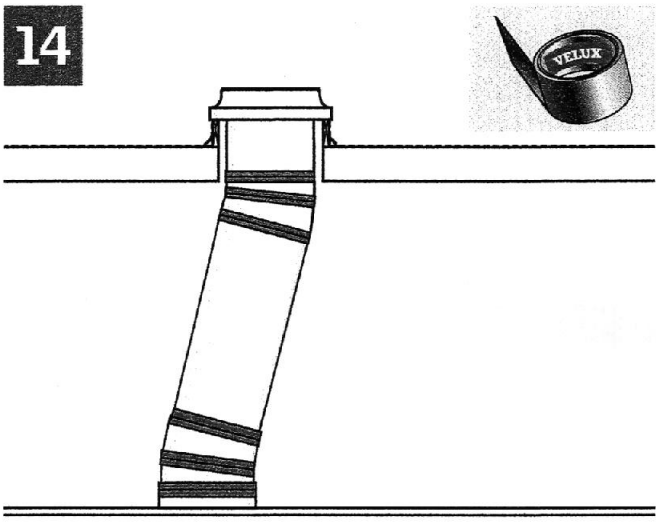

ENGLISH: Tape all joints.
Note: For rigid sun tunnel assemblies, it is generally recommended to secure transmittance of loads to the roofing structure by using suspension kit ZTZ 203.

ESPAÑOL: Asegure todas las juntas con cinta.
Nota: Para montajes de túneles solares rígidos, generalmente se recomienda asegurar la transmisión de carga a la estructura del techo mediante el kit de suspensión ZTZ 203.

FRANÇAIS : Recouvrir tous les joints de ruban adhésif.
Note : Pour l'assemblage d'un tunnel de lumière rigide, il est généralement recommandé d'assurer le transfert de poids de la structure à la toiture en ajoutant la trousse de suspension ZTZ 203.

15

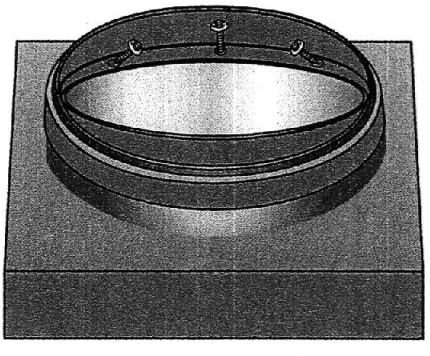

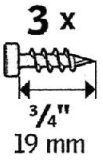

ENGLISH: Seat the pivot ring with the tunnel assembly into the flashing. Secure with screws if needed.

ESPAÑOL: Coloque el anillo pivotal con el conjunto del túnel dentro del tapajuntas. Fije con tornillos de ser necesario.

FRANÇAIS : Insérer l'anneau pivotant dans l'assemblage du tunnel à l'intérieur du solin. Fixer à l'aide de vis au besoin.

19

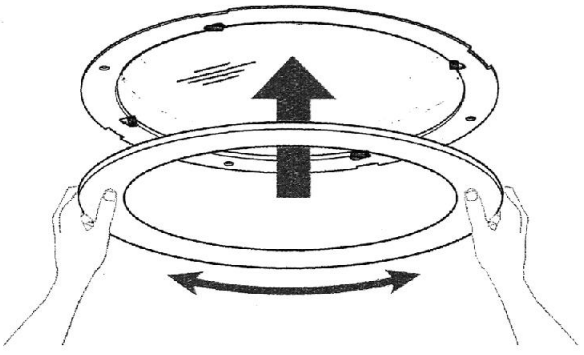

ENGLISH: Install the trim ring by aligning notches and rotate to secure.

ESPAÑOL: Instale el anillo de terminación alineando las ranuras y gírelo para una correcta sujeción.

FRANÇAIS : Installer l'anneau de finition en alignées les enclenches et pivoter pour fixer en place.

20

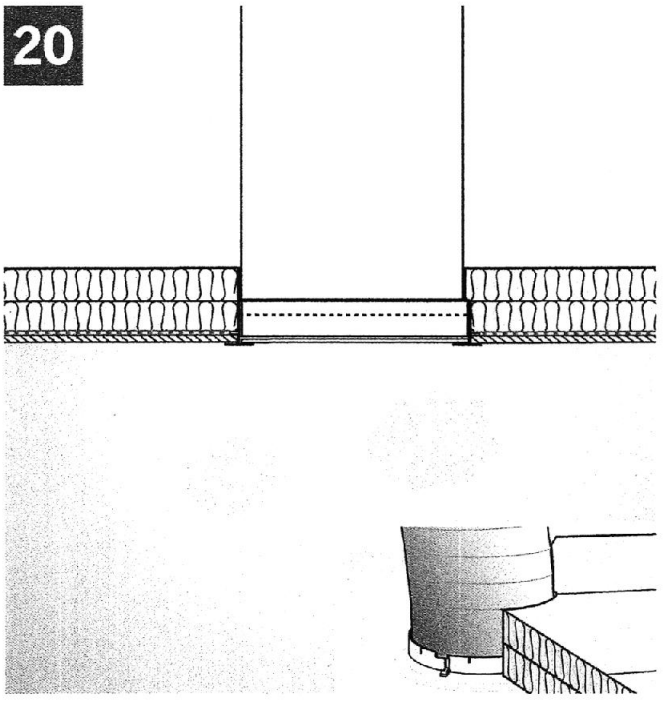

ENGLISH: If vapor barrier is installed, insure a tight joint between the ceiling ring and the vapor barrier. Reposition the insulation material around the tunnel.
In Canada it is necessary to form an air tight seal between the vapor barrier and the VELUX sun tunnel. This can be done by using a vapor barrier tape. It is important that the ceiling area (attic side) around the sun tunnel is well insulated. This can be done by spraying the perimeter with polyurethane foam or insuring that the insulation used is snug around the tunnel.

ESPAÑOL: Si se instala la barrera de vapor, asegúrese que la unión entre el anillo del cielo raso y la barrera de vapor sea estanca. Coloque de nuevo el material de aislamiento alrededor del túnel.

FRANÇAIS : L'utilisation d'un écran pare-vapeur nécessitera l'installation d'un joint étanche entre l'anneau de plafond et l'écran pare-vapeur. Repositionner ensuite le matériel isolant autour du tunnel.
Au Canada, on exige un scellement hermétique entre l'écran pare-vapeur et le tunnel de lumière de VELUX. Un ruban pare-vapeur pourra être utilisé à cet effet. Il est également important de bien isoler la partie du plafond autour du tunnel de lumière (côté grenier) soit en vaporisant le périmètre avec de la mousse polyuréthane ou soit en s'assurant que le matériel isolant existant est bien installé tout autour du tunnel.

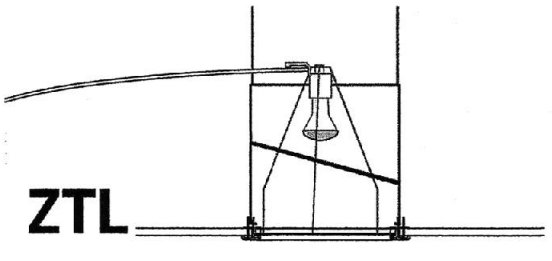

ENGLISH: Sun tunnel light option – Refer to light kit ZTL 114.

ESPAÑOL: Alternativa de túnel solar con luz – Consulte la información sobre apliques de luz tipo ZTL 114.

FRANÇAIS : Option d'éclairage pour tunnel de lumière – Veuillez vous référer à la trousse pour lumière électrique ZTL 114.

Aartra

PROJECT SPECIFICATION

Timmins House

53 Banks Boulevard
Whitby
Porirua

Porirua City Council
Approved Consent Document
24 NOV 2017
0560/17
BCA Number
David Nolan
On behalf of Porirua City Council

Issued for Consent

1716

PROJECT OVERVIEW

Scope

Proposed new 2 level dwelling

Address

Site Address	53 Banks Boulevard
Suburb	Whitby
City	Porirua
Lot #	850
DP #	496906

Site Conditions

Wind Zone	H - High Wind Speed
Earthquake Zone	Zone 3
Exposure Zone	Zone C - Medium
Snow Loading Zone	Zone N0

© Smartspec 2017

TABLE OF CONTENTS

Preliminaries & General 5
Project Specifics 5
Project Overview 9
Establishment & Enabling 15
Siteworks 22
Site & Scope 22
Siteworks 23
Concrete 32
Materials 32
Workmanship 33
Reinforcing Steel 35
Concrete 39
Blockwork 49
Workmanship 49
Concrete Blockwork 51
Brickwork 57
Brickwork 57
Waterproofing 59
ARDEX Shelterseal Damp-Proof Membranes 59
Carpentry 65
Timber Framing 66
Plasterboard Sheet Linings 72
Timber Weatherboard Cladding 75
Workmanship & Materials 77
Residential Garage Doors 85
GIB® Rondo® Metal Batten Systems 90
Thermakraft Underlay, DPM & DPC 95
Roofing 102
Metalcraft Roofing - Longrun Roofing 102
Aluminium Joinery 105
Aluminium Windows & Doors 105
Insulation 110
Pink® Batts® Insulation 110
Joinery 116
Workmanship 116
Materials 117
Elements 118
Other 118
Painting & Decorating 120
General 120
Plumbing 123
Workmanship 124
Materials 126
Systems 126
Elements 128
Gas Reticulation 130
Gas System - Piped Natural Gas 130
Electrical 140
Workmanship 141

© Smartspec 2017

Systems 142
Materials & Control 143
Elements 143

© Smartspec 2017

1 PRELIMINARIES & GENERAL

1.1 Project Specifics

1.1.1 Nominated Subcontractors

There are no Nominated Subcontractors within this Contract.

1.1.2 Separate Contractors

There are no Separate Subcontractors

1.1.3 Contingencies Sums

There are no Contingencies Sum within this Contract - any adjustments to the contract works will be handled as Variations to the Contract.

1.1.4 Prime Cost Sums

There are no Prime Cost Sums within this Contract.

1.1.5 Provisional Sums

There are no Provisional Sums within this Contract.

1.1.6 Separate Sections

The works are not divided into Separate Sections.

1.1.7 Contractor's Performance Bond

A Contractor's Performance Bond is required.

Porirua City Council
Approved Consent Document
24 NOV 2017
0560/17
BCA Number
David Nolan
On behalf of Porirua City Council

1.1.8 Principal's Bond

A Principal's Bond is not available.

1.1.9 Principal Supplied Items

The Principal is not supplying any items to be incorporated into the works.

1.1.10 Defects Liability Period

The Defects Liability Period is 3 months, commencing on the date that Practical Completion is achieved.

1.1.11 Fluctuations

Fluctuations are not allowed in this Contract. (This will be a Fixed Price Contract. The Contract Sum will not be subject to fluctuations resulting from variations which give rise to an extension of time, and the Preliminary and General Costs Allowance and the Contractor's Margin will not be adjusted unless the scope of the Contract is substantially changed).

1.1.12 Retentions

No retentions will be deducted from amounts that are certified as payable to the Contractor.

1.1.13 Contractor's Retention Bond

A Contractor's Bond is not acceptable in lieu of Retentions.

1.1.14 Liquidated Damages

Liquidated Damages do not apply to this Contract.

1.1.15 Early Completion Bonus

There is no Early Completion Bonus within this Contract.

1.1.16 Contract Sum

Tenders will be called as a prelude to establishing a Contract Sum. Tenders shall be based exactly on and will be interpreted as relating to the information with regard materials, details, selections, systems and works as is contained in the Contract Documents unless clearly endorsed otherwise; any Tenders which are submitted subject to special conditions will be considered accordingly.
Note that no claims will be recognised for the provision of a tender, and note that Tenderers are requested to inspect the site of the works as no claims for additional payment will be recognised on the grounds of insufficient description.

Tenders shall state:
- The Tender Amount.
- The names of subcontractors whose prices are incorporated into the tender.
- A summary showing the net value of subcontracts, materials and labour, and extensions applied to arrive at the tender amount. (A suggested format is provided below).
- Labour rates for Variations costing for the Main Contractor and principal Subcontractors. (These rates shall be inclusive of all - Service and qualification payments, - Industrial allowances and tool money, - Annual, statutory and special holiday pay, - Sick, domestic and bereavement leave, - Plant and tools customary to the trade, - Protective clothing, footwear and equipment, - Travelling time, vehicle and transport costs, - Accident Compensation and Public Liability and other insurances. For Subcontractors the Labour Charge Rate identified shall include all administration costs as NO Subcontractor Preliminary and General Costs Allowance claims will be accepted for Variations).
- Acknowledgement of any Notices to Tenderers.
- A proposed start date and contract period assuming tender acceptance within four weeks after closing of tenders. In assessing the proposed contract works period Tenderers must allow for the inclement weather delays that would normally be expected in the works locality during the contract period. Note that NO claims for additional payment based on inclement weather will be recognized.
- Any apparent discrepancies discovered in the Contract Documents.
- Identification of any items where the Tenderer does not consider the Contract Documentation to be sufficient for the purposes of carrying out the works.
- Alternative materials/methods offered (if any) and preliminary costings for them.

Note that the lowest or any tender will not necessarily be accepted.
Note that in 'Work Shown and Mentioned' above Contractors are required to provide fully completed

works; Tenderers should draw attention to any significant such item they have allowed for in their Tender to achieve this completion.
Note that although there is no Tender Documents deposit required it would be appreciated if unsuccessful Tenderers could return all tendering drawings and documents in reasonable condition after the tender result is notified - thank you.

Alternatives may be tendered except where expressly stated, but they, and their costings, must be appended to the Tender, and shall not form part of it. Alternatives will be considered only after the Contract is let, and if considered equal or superior to that specified and accepted by the Architect/Designer and the Principal they will be approved as a Variation Order.

1.1.17 Insurance of the Works

Insurance of the works is at the risk of the Contractor, and shall be completely in accordance with the Conditions of Contract.

1.1.18 Other Insurance

The minimum amount of the Contractor's public liability insurance shall be $2,000,000, the minimum amount of the Contractor's motor vehicle liability insurance shall be $200,000, the Contractor shall insure all appliances, machinery and apparatus required for the Contract Works but not incorporated into the Contract Works, and no Contractor's professional indemnity (design) insurance is required.

1.1.19 Sundry

The Contractor is responsible for accurate setting out of the works. It is recommended that the Contractor engage a Registered Surveyor to establish the basic site set-out and the floor levels.

A Registered Surveyor, engaged by the Contractor, shall check and confirm the accuracy of the Contractor's detailed setting out of the works and shall certify this in writing to the Architect/Designer.

Note that the 'Project North' direction is identified on the Site Plan, and that all direction or orientation references within this specification or on the drawings are in terms of this Project North.

A competent foreman shall be constantly on the works and any instructions or explanations given to such persons shall be deemed to have been given to the Contractor.

Notify the Principal each time it is necessary to isolate sections of the heat detectors system. Ensure that the duration or these periods of isolation are absolutely minimised.

Contractor and Subcontractors must familiarise themselves with egress routes from the building, and must ensure that egress routes are NEVER obstructed with construction materials such as to prejudice egress.

Power, water and cable communucations services are already on the site. Arrange and pay for adequate temporary connections to these services for the duration of the contract.

1.1.20 Warranties

Provision of Warranties

Provide executed warranties in favour of the Principal covering, but not limited to, materials, components, service, application, installation, finishing, etc., required for that section of work.

- The terms and conditions of the warranty provided shall not negate the minimum remedies available under common law as if no warranty had been offered.
- Failure to provide the required warranty does not reduce liability of warranty conditions required for that section of work.
- Where an Installer/Applicator warranty is included in this specification, it shall be provided in lieu of the warranty otherwise required, but only when it is subject to similar conditions and warranty period stated in the Schedule of Warranties.
- Conform to the Warranty Agreement form included in the conditions of contract.
- Commence all warranties from the date of practical completion of the contract works (unless otherwise stated).
- Maintain the effectiveness of all warranties for the period stated.
- Provide all warranties before practical completion of the contract works.

Schedule of Warranties

The following schedule is a summary of warranties and warranty periods required for the following sections of work:

Warranty for Weathertightness and Watertightness

The Contractor shall provide a warranty, for a minimum period of 2 years, covering the weathertightness of the completed building envelope and the watertightness of all liquid supply and liquid disposal systems and fittings.

Installer/Applicator Warranties

Provide Installer/Applicator warranties in favour of the Principal, covering execution and materials of proprietary products or complete installations.

- An Installer/Applicator warranty may be offered in lieu of the warranty otherwise required for that section of work, but only when it is subject to similar conditions and period stated in the Schedule of Warranties.
- The terms and conditions of the Installer/Applicator warranty shall not negate the minimum remedies available under common law as if no warranty had been provided.
- Failure to provide the required Installer/Applicator warranty does not reduce liability for execution and materials required for that section of work.
- Conform to the Installer's/Applicator's standard warranty form, or to the Warranty Agreement form included in the contract documents if a standard form is unavailable.
- Commence all Installer/Applicator warranties from the date normally applicable for the work.
- Maintain the effectiveness of all Installer/Applicator warranties for the period stated.
- Provide all Installer/Applicator warranties before practical completion.

Manufacturer/Supplier Warranties
Provide Manufacturer/Supplier warranties in favour of the Principal, covering materials, equipment, appliances, proprietary products, etc.

- The terms and conditions of the Manufacturer/Supplier warranty provided shall not negate the minimum remedies available under common law as if no warranty had been offered.
- Failure to provide the required Manufacturer/Supplier warranty does not reduce liability for execution and materials required for that section of work.
- Conform to the Manufacturer's/Supplier's standard warranty form.
- Commence all Manufacturer/Supplier warranties from the date normally applicable.
- Maintain the effectiveness of all Manufacturer/Supplier warranties for the period stated.
- Provide all Manufacturer/Supplier warranties before practical completion.

1.2 Project Overview

1.2.1 Contract Documents

The Contract Documents are complementary and comprise this Specification, the accompanying drawings, the Contract together with Schedules as specified below, any written documentation clarifications issued during tendering/estimating, any manufacturer/supplier information issued with this Specification, any list of agreed Subcontractors, the contract establishment letter and any other relevant correspondence, and any Site Instructions or additional details or instructions issued as Variations.

If the Architect/Designer has not been engaged to administer the Contract or observe the works, then the term Architect/Designer, where referred to in this specification, means Contract Administrator.

These Project Specific Conditions supersede the Standard Conditions where they are in conflict. Refer any ambiguity or apparent discrepancy within or between any Contract Documents to the Architect/Designer, whose interpretation shall be binding on all parties.

Ensure that all Trades are aware of all Conditions and that subcontract prices are accepted on this basis, and in a form acceptable to the Registered Master Builders Federation or the Certified Builders Association. Ensure that all persons engaged on the works are aware of all items in this specification and on the drawings that may in any way affect their section of the works.

1.2.2 Site

Relevant site conditions are believed to be correctly represented in the Contract Documents, however the Contractor (and Subcontractors where appropriate) are requested to inspect the site to ascertain for themselves the nature and extent of the works and the rights and interests that may be interfered with in the execution of the works, as no claims for additional payment will be recognised on the grounds of insufficient description.

1.2.3 Adjacent Owners

Carry out whatever actions or precautions are required to avoid or to absolutely minimise noise, dirt, dust, access, etc. inconvenience or disruption of any nature to the adjacent owners or tenants. Indemnify the Principal against any claims arising from this source.

1.2.4 Protection

Take all appropriate precautions to protect all third party property, services, etc., and indemnify the Principal against any claims arising from the construction operations. Any damage to third party property caused by construction activities or failure to protect shall be rectified as soon as possible by the person causing the damage, or by appropriately qualified trades-persons employed by the person responsible for the damage if necessary.
Suspend operations during weather which would affect the quality of work in progress. Secure the works as soon as possible against adverse weather, dust and vandals. Avoid structural damage that is caused by overloading.
Adequately protect all finished work and maintain until the date of Practical Completion. Each trade shall protect the work of all other trades, and each trade is responsible for making good any damage they cause to finished works. Arrange special protection as required for windows and doors, finished timber work, plumbing fittings and hardware, cabinets and other joinery, and similar items.

1.2.5 Responsibility

The Contractor will be held responsible for the full period of his legal responsibility in connection with this Contract for ensuring that all work execution, materials, and fittings, are completely in accordance with Contract requirements.
The Contractor is responsible to the Principal for the appropriateness and fitness, in relation to a reasonable expectation or requirement, of all of the materials and workmanship incorporated into the works by himself or his subcontractors; for this reason few specific guarantees are required in these contract documents. The terms and conditions of any warranty or guarantee required or provided shall not in any way negate the minimum remedies available under common law as if no warranty or guarantee had been furnished.
No apparent expression of the Architect's/Designer's reasonable satisfaction shall be deemed to be acceptance of defective materials or workmanship within the terms of the Contract or to be an authority for any Variation except where such Variation is authorised as provided for in the Contract. Instructions that are given verbally are deemed to be instructions for proper execution of the works and do not involve extra charges.

Workmanship in all trades is required to be equal to or better than recognised good trade practice. The Contractor shall provide all necessary setting out information and component dimensions for subcontractors and shall check and be responsible for the accuracy of their work.

Should any tradesperson consider that the surface finish or general conditions of previous work are unsatisfactory to ensure a proper finish for their own work thereon, that tradesperson shall give immediate notice to the Contractor or Architect/Designer as appropriate and shall not proceed until all necessary improvements have been made. Failing such notice the trade concerned will not be relieved of responsibility for a poor finish due to such unsatisfactory condition.
Specialist Finishes Subcontractors are responsible for ensuring that substrates are completely

appropriate for them to achieve first class results, and to this end shall, in sufficient time, instruct the Contractor with regard any fixings, primings, sealings or whatever for the substrate that vary in any way from the substrate manufacturer's standard recommendations. The Contractor shall advise the Architect/Designer with regard these variances, and not proceed until the Architect/Designer has agreed to them.

The Contractor and all Subcontractors affected shall be jointly and severally responsible for completion of the whole of the works in a completely watertight condition and shall therefore examine all details to be satisfied that this condition can be achieved. If any detail is considered unsatisfactory the Architect/Designer shall be notified immediately and he/she will then either interpret the detail to the Contractor's satisfaction, or accept responsibility for watertightness at the points in question, always assuming reasonable workmanship.

Ensure that all materials or items incorporated into any particular construction or finish are compatible and that their individual use is approved by the manufacturers and/or suppliers of the other parts of the system.
For all electronic/electrical/mechanical operating systems all work and all necessary materials and items incidental to the primary item specified, that are incorporated into the works, shall be such as to leave a neat, efficient, easily maintained and robust installation, completely in accordance with all of the recommendations of the primary items' manufacturers. Where appropriate, source all parts of a system from a single supplier or manufacturer.

The Contractor shall make provision for all temporary works and services required for the satisfactory completion of the contract works. The Contractor shall pay all associated costs and fees; carry out all necessary maintenance, alterations and servicing requirements; and remove temporary works and services on completion of the contract works. Temporary works and services shall comply with the requirements New Zealand Building Code.

1.2.6 Specification

This Specification covers contract administration, standards, materials quality, workmanship and the scope of works only: the exact nature of the works and all specialist items, descriptions, etc., are contained on the drawings, which also take full precedence.
All clauses in all specification sections apply to their full extent and meaning to the entire Contract. Trade sections and paragraphs have been introduced into this specification for reference only and it shall not be construed that each trade section is a complete segregation of the materials and labour of that trade. The onus is on all trades to be conversant with any and all clauses which in any way affect their work.
(Be aware that the 'scope' noted in the 'Project Overview', and scope and general extent clauses within this specification, are included to provide a general indication only and must NOT be interpreted as schedules of quantities - the exact nature and extent of all aspects of the works are shown on the drawings).

1.2.7 Standards

New Zealand Standards (NZS), Australian Standards (AS), Joint Standards (AS/NZS), British Standards (BS), Acts of Parliament, Regulations made thereunder, Codes of Practice, and any specific

Manufacturer's Instructions or Manufacturer's Recommendations that are referred to in these Contract Documents shall all be deemed to be the latest published edition thereof at the time of drawings issue, and shall be followed by the Contractor and all Subcontractors to the full extent applicable consistent with the intent of this Contract. Documents cited within other cited publications are deemed to form part of this specification.
Where Standards have a number of Divisions, e.g. AS/NZS 3500.1, AS/NZS 3500.2, etc., each of the Divisions relevant to this project is deemed to form part of this specification.
Retain current copies of significant cited documents and manufacturer's technical literature on the site.

1.2.8 Authorities and Charges

Comply with all relevant provisions of the NZ Building Code, and with all relevant territorial or statutory authority regulations, by-laws, obligations, etc. Give all required notices.

The Principal has obtained a Land Use Consent. The Principal has applied for and paid for the Project Information Memoranda, the Building Consent and other approvals required for the works to start. The PIM and Building Consent will be forwarded to the Contractor as quickly as possible after they are issued by the Territorial Authority. Note: It is an offence under the Building Act to carry out work not in accordance with a Building Consent.
Should the Building Consent be subject to any conditions which modify the requirements of the Contract Documents in any way, the Architect/Designer reserves the right to negotiate any or all of these modifying conditions with the Building Consent Authority. If after these negotiations additional work is required, it will be handled as a Variation to the Contract.

1.2.9 Code Compliance Certificate

The Principal will apply for the Code Compliance Certificate (CCC) and any other licenses or approvals for the building to be used. However, Practical Completion will NOT be certified until the CCC inspection has occurred and any additional works required by the local Building Consent Authority have been completed. To this end it is recommended that the Contractor obtains all required certificates, guarantees, Producer Statements, as-built drawings, etc., required for the CCC application as work proceeds, to facilitate application for the CCC as soon as the works are completed. For his part, the Principal hereby undertakes to apply for the CCC within one day of all required material being in hand. Likewise, the Contractor should have capacity available to attend as quickly as possible to any items identified by the Building Consent Authority as being required prior to the issue of the CCC.

1.2.10 Coordination of the Works

Coordinate the works of all trades to ensure efficient progress of the works. Ensure that all holes, sleeves, penetrations, supports, etc., that are required for services are correctly incorporated as work proceeds. Identify and sufficiently forward-notify the appropriate persons of all deadlines for the supply of fittings, components, information, etc.

1.2.11 Work Shown and Mentioned

The Contract Documents show the extent and nature of the works but there is no warranty expressed or implied that they show each and every minor detail or item required to be included by the

Contractor. Should any material, structural member, fixing, or item or work appear to be inadequately described, yet obviously necessary for the neat, strong and satisfactory completion of the work, it shall be incorporated into the Contract Works.

1.2.12 Site Safety

Comply with the Health and Safety at Work Act 2015 (HSWA), and with all relevant Health and Safety at Work Regulations 2016, and with all relevant WorkSafe New Zealand (WorkSafe) Approved Codes of Practice and WorkSafe Information and Guidance, particularly those for construction and building maintenance. Comply with the relevant provisions of the New Zealand Building Code, in particular Clause F5.

So far as is reasonably practicable and according to a PCBU's (person conducting a business or undertaking) primary duty of care, take all necessary steps required to make the site and the contract works safe, and to provide and maintain a safe working environment. Ensure that all those working on or visiting the site are aware of the site safety rules and are not unnecessarily exposed to hazards.

Each PCBU, so far as is reasonably practicable, must ensure the health and safety of workers, and that other people are not put at risk by its work. If more than one PCBU has a duty in relation to the same matter, each PCBU with the duty must, so far as is reasonably practicable, consult, co-operate with, and co-ordinate activities with all other PCBUs who have a duty in relation to the same matter. PCBUs can enter reasonable agreements with other PCBUs to meet their duties, but cannot contract out of their duties.

Notify WorkSafe as soon as possible when a notifiable event occurs. Take all reasonable steps to preserve the site of the notifiable event in accordance with WorkSafe requirements. Ensure that the site of the event is not disturbed until authorised otherwise by WorkSafe. Keep records of all notifiable events.

Scaffolding shall comply with all Statutory and Local Authority Regulations, with the WorkSafe 'Best Practice Guidelines for Scaffolding', AS/NZS 1576 (Scaffolding equipment), AS/NZS 4576 (Guidelines for Scaffolding), and AS/NZS 4994 (Roof edge scaffolding), and shall be maintained for the duration and removed on completion.

The use of ballistic fixings must absolutely comply with all relevant safety recommendations at all times. No rubbish fires are allowed on site. Portable/personal disc/tape players, radios and iPods must not be used anywhere on the site. No smoking on site, except in the designated location in accordance with the Smoke Free Environments Act 1990, the location of which will be determined by the Contractor, with the approval of the Principal.

A PCBU's primary duty of care includes, but is not limited to, so far as is reasonably practicable:
- providing and maintaining a work environment that is without risks to health and safety;
- providing and maintaining safe plant and structures;
- providing and maintaining safe systems of work;
- ensuring the safe use, handling and storage of plant, structures and substances;
- providing adequate facilities for the welfare at work of workers in carrying out work for the business or undertaking, including ensuring access to those facilities;

- providing any information, training, instruction, or supervision that is necessary to protect all persons from risks to their health and safety arising from work carried out as part of the conduct of the business or undertaking;
- monitoring the health of workers and the conditions at the workplace for the purpose of preventing injury or illness of workers arising from the conduct of the business or undertaking.

Before commencing work on the site, the Contractor shall prepare and submit to the contract administrator a health and safety plan. The health and safety plan shall include, but not be limited to:
- the health and safety of all people on the site and on other properties, and the general public;
- identification of existing and potential construction hazards and risks;
- safety procedures to eliminate, isolate or minimise construction hazards;
- the equipment to be used to minimise the hazards;
- the maintenance of a register of hazards for the site;
- the name and qualifications of the site safety person;
- emergency procedures;
- first aid facilities and safety equipment;
- the methodology for notifying, recording and investigating accidents and injuries.

Carry out all construction operations in accordance with the submitted health and safety plan.

1.2.13 Cleaning and Completion

Clear construction debris and rubbish from the works at regular intervals, and additionally if so instructed by the Architect/Designer. Clean each space thoroughly before commencing any finishing works.

In preparation for the Practical Completion inspection carry out the following:
- Clean the works thoroughly, removing all debris, surplus materials, splashes, marks, temporary markings, etc. (All cleaning methods and materials shall be as recommended by the manufacturer of the item being cleaned).
- Remove protective wrappings and coverings unless otherwise directed.
- Touch up minor painting faults, carefully matching colour, and brushing out edges. Repaint any badly marked surfaces back to suitable break-lines.
- Adjust, ease and/or lubricate as required all doors, drawers, controls and other moving parts to ensure their efficient operation.
- Any other works required to leave all spaces ready for immediate occupation and all electronic/electrical/mechanical systems fully operational.
- Clean out all spoutings, gutters, downpipes, and gullies and flush out all drains.
- Clean all sanitary appliances and check all aspects of the water services.
- Thoroughly re-inspect all aspects of the works (and have any defects fully rectified) to be certain that the works are completely ready for the Practical Completion inspection - if an unreasonable number of items are noted by the Architect/Designer during the inspection it will be terminated and then rescheduled for at least a week forward to allow proper completion to be achieved.

(Note that a Code Compliance Certificate must be obtained before Practical Completion will be certified. Obtain all required certificates, guarantees, as-built drawings, etc., as work proceeds to enable the CCC application to be submitted as soon as construction is completed).

1.3 Establishment & Enabling

1.3.1 Site Establishment

Safety

Comply with the Health and Safety at Work Act 2015 (HSWA), and with all relevant Health and Safety at Work Regulations 2016, and with all relevant WorkSafe New Zealand (WorkSafe) Approved Codes of Practice and WorkSafe Information and Guidance, in particular the 'OSH Guidelines For the Provision of Facilities and General Safety in the Construction Industry'.

Carry out all construction operations in accordance with the Contractor's project-specific Health and Safety Plan.

Site Inspection Assessment

The Contractor (and sub-contractors where appropriate) shall be deemed to have examined and inspected, prior to tender, the site and its surroundings, and to have satisfied themselves as regards to access to the site, the form and nature of the site, all existing services, structures and features on the site, the risk of injury or damage to property, and the nature and extent of the work and materials and methodologies necessary for the execution of the works.

Site Boundaries

Establish the accurate location of property boundaries prior to setting out the works.

Regulatory Authorities

Comply with all statutory obligations and regulations required by the Regulatory Authority controlling the execution of the works.

The work shall be carried out in strict compliance with the relevant consents and approvals issued by the controlling Territorial Authority (TA). No work shall be undertaken until all necessary consents and approvals have been obtained.

Accept responsibility for notifying the Territorial Authority and arranging for any inspections and testing and commissioning procedures required by them at various stages of construction.

Network Utility Operators

The work shall also be carried out in accordance with all network utility operators having jurisdiction over utilities in or around the site.

Notify the network utility operators of the proposed works, and ascertain and become familiar with any particular requirements and the location of existing services prior to commencing site operations.

Attend on network utility operators as necessary to obtain approvals (in addition to Building Consent approval) for the satisfactory completion of the works.

Accept responsibility for notifying network utility operators and arranging for any inspections and testing and commissioning procedures required by them at various stages of construction.

Existing Services
Locate all existing services before commencing work in any area, and locate all underground services affected by the contract works. Any detail of an existing private underground service provided by the owner is done so in good faith.

As necessary:
- obtain all records of existing underground services held by the relevant utility network operators;
- give all required notices to the service authorities or companies and the Territorial Authority, and pay all relevant fees and charges;
- carry out a detection survey of the site to ensure there are no buried operative electric cables;
- protect existing services on the site, and rectify any damage or interference to them, and provide temporary services while repairs are being carried out;
- extinguish and remove existing services designated redundant by the contract works.

Permitted Access & Work Hours
Permitted access and work hours is restricted to the following limitations:

Temporary Buildings & Site Amenities
As necessary, make arrangements for the provision of all site services and amenities and facilities required for the works and site staff, including storage sheds, offices, lunch rooms, sanitary facilities and other temporary buildings and facilities required for storage and the management of the works.

These temporary services and amenities shall be for the use of site staff while on site, and as required by the relevant Regulations and Acts, and shall be located in a position within the site boundaries - refer to the Site/Enabling drawings for designated area(s).

Rubbish and contained wastewater from site amenities and facilities shall be removed from the site as appropriate and at least on a weekly frequency.

Temporary Roads & Surfaces
Make all necessary provisions for site-related temporary roads, tracks, crossings, hard standing, etc., required for the execution of the works. Maintain these temporary surfaces at the required standard throughout the duration of the works.

Hoardings, Gantries, Lighting
Provide temporary fencing, hoardings, planked footways, guard rails, gantries and lighting as necessary to protect the public and others, for the proper execution of the works and to meet the requirements of the Regulatory Authority and relevant Regulations and Acts.

Project Sign Board
Obtain approval for and provide and erect for public display, a timber-framed printed Project Sign Board measuring ---mm wide x ---mm high.
The project sign board shall include images and graphics to the Architect's/Designer's design, and display the following:
- the Project name; and
- the Principal's name; and

- the Project Consultants' names; and
- the Main Contractor's name; and
- if requested by the Contractor, the names of their Sub-Contractors.

Setting Out
Accept responsibility for the correct and accurate setting out of the works to conform to the drawings, and that specified locations, orientations, depths and levels are strictly adhered to.

As necessary, locate and verify survey marks and datum points and maintain their accurate position.

Establish reference points, datums, profiles or similar clear of excavations and to allow for easy and accurate checking at all stages of construction. Ensure these are not damaged or dislodged during construction operations.

Where required, employ a licensed cadastral surveyor to establish and set out the positions of the foundations, grid lines and floor levels.

Where required, issue to the Building Consenting Authority a copy of the surveyor's certificate (Pegging Certificate or Building Location Certificate) in accordance with the conditions of the Building Consent.

1.3.2 Temporary Works & Services

General
Make provision for all temporary works and services required for the satisfactory completion of the contract works.

Pay all associated costs and fees; carry out all necessary maintenance, alterations and servicing requirements; and remove temporary works and services on completion of the contract works. Temporary works and services shall comply with the requirements New Zealand Building Code.

Site Water
Make all necessary arrangements for the provision and reticulation of clean, fresh potable water required for site amenities and for the construction works.

Site Electricity
Make all necessary arrangements for the availability and connection of temporary electrical power required for operating site facilities and amenities, health and safety and security requirements, and plant operation and general construction use in strict accordance with electrical regulations.

Comply with the network utility operators requirements, and be responsible for maintaining and servicing temporary electrical distribution plant and equipment as necessary.

Site Phone & Data Facilities
Make all necessary arrangements for the availability and connection for temporary site telephones, facsimiles and computer email and internet services required for the sending and receiving and printing of communications to and from the site.

Site Perimeter Fencing

Provide and maintain all necessary fencing at the perimeter of the site in accordance with NZBC F5/AS1, prior to commencing the works, in order to prevent unauthorised entry by the public onto the site.

Site fences adjacent to public spaces shall:
- extend at least 2.0m from ground level on the side accessible to the public; and
- have a maximum 100mm gap between bottom of the fence and ground; and
- be constructed of galvanised chainlink netting with maximum 50 x 50mm grid size; and
- have posts spaced apart at maximum 2.5m.

Site Cleaning & Waste Management

Accept responsibility for and make all necessary provisions for periodic site cleaning, and for the management and disposal of all construction waste material, recyclable waste, and materials requiring special disposal during the contract period.

The Contractor and their subcontractors shall:
- conform to applicable regulations for disposal and removal of common and hazardous waste; and
- handle and dispose of all hazardous and banned materials in accordance with national and local regulations - such materials include, but are not limited to asbestos, underground storage tanks, polychlorinated biphenyls (PCBs), abandoned chemicals (petrol, pesticides, herbicides, flammable and combustible substances), freon from cooling equipment, lead-based paints, smoke detectors and mercury-containing switches; and
- pay all associated disposal fees.

If a project-specific waste management plan is to be implemented and deployed, ensure that all site personnel, including management and staff, subcontractors and material suppliers, are fully aware of the specific procedures and requirements and have access to or copies of the waste management plan.

The disposal of rubbish and construction waste materials by burning on the site is NOT permitted under any circumstances.

Site Security

Accept responsibility for the security of the site, the works, plant and materials during and after working hours, over the period of the contract, and:
- take all reasonable precautions and make provision for the general security of the site, including unauthorised access to the site, to the works and to adjoining properties; and
- safeguard the site, the works, plant and materials from damage and theft.

Dust & Noise Control

Take measures to minimise nuisance from dust, noise and other causes affecting adjoining properties and the public.

Dust:
- The effects of dust shall be appropriately managed within the boundary of the site.
- Comply with the conditions of the Resource Consent/Building Consent related to dust control.

Noise:
- Permitted construction noise levels shall be less than the maximum limits required by the Territorial Authority and NZS 6803.
- Comply with the conditions of the Resource Consent/Building Consent related to noise control.
- As required, prepare a site-specific Construction Noise Management Plan.

Stormwater & Sediment Control
Carry out excavation and construction works and operations to ensure that they fully comply with the relevant controlling environmental authority's sediment control and stormwater discharge guidelines.

Provide suitable measures to prevent or minimise sediment generation and silt runoff. If at any time the performance of the stormwater and sediment control works, or ongoing review of them, indicates that they need to be extended or modified, the design modification and construction shall be undertaken at no extra cost to the Principal.

Construction Vibration
Comply with the conditions of the Resource Consent/Building Consent related to vibration control. Where required, prepare a site-specific Construction Vibration Management Plan.

Construction vibration monitoring shall be undertaken and assessed during construction in accordance with DIN 4150-3:1999; to demonstrate that vibrations to third-party buildings and structures generated from on-site construction activities are less than the maximum limits recommended in DIN 4150-3:1999 and conform to the conditions of the Resource Consent/Building Consent. Peak particle velocity (ppV) limits applied shall be as required by the Resource Consent/Building Consent.

Vibration monitoring shall be carried out at the property boundary. Additional monitoring inside the neighbouring property shall be carried out where the vibration limits at the boundary exceed the permitted level or when complaints are received. Where access is granted such additional monitoring shall be carried out either outside the building but connected to the building foundation or inside the building.

Shoring
Accept responsibility for and make all necessary arrangements, for the provision and maintenance of shoring required during the course of the contract works to prevent subsidence and collapse of adjacent ground, structures and public and private property, and to ensure the safety of site personnel and the public.

Shoring shall remain in place as necessary and until foundations and below ground structures have been completed, and the stability of adjacent ground, structures and public and private property is secured.

Shoring - generally:
- Shoring shall be undertaken in accordance with the 'Approved Code of Practice for Safety in Excavation and Shafts for Foundations'.
- Shoring must be designed in accordance with sound engineering practice, and materials used must be suitable and of sound quality.
- Shoring for large and extensive excavations shall be designed by a Registered Engineer.
- Shoring must be placed in a proper and workmanlike manner.
- Drawings of the temporary works must be available at the job site.
- The shoring of a face must be carried along with the excavation with the least possible delay between the excavation of the face and the completion of the shoring.
- Shoring must not be altered, dismantled or interfered with, except on the instructions of the Contractor.

1.3.3 Protection of Existing Features

Survey Marks
Preserve and maintain in their true position all survey marks other than marks which are required to be covered or removed by the contract works. Accept responsibility to reinstate/replace any survey mark that is disturbed or obliterated by the works.

Adjacent Sites
Take all necessary care to prevent damage to adjoining public and private property, such as existing buildings, existing roads, footpaths, fences, site services, trees, landscaping site features, until completion of the works. Any adjoining public or private property damaged by the Contractor's construction activities, or failure to protect these, shall be reinstated/made good to the required standard.

Accept responsibility for keeping all public thoroughfares clear and free of debris and contamination from the contract works.

Existing Site Services
Take all necessary precautions and make appropriate provisions to protect from damage and contamination existing services (buried, fixed, suspended) within the works area that are designated to remain intact while the contract works are being carried out.

Accept responsibility to:
- as required, cooperate with the requirements of the utility network operators; and
- provide as necessary all temporary covers, caps, etc., to prevent any moisture, dust and other contaminants entering service ducts, conduits, pipes, control boards, etc.; and
- ensure that manholes, pits, hydrants, tobys and other surface openings in the vicinity of the works are not concealed by construction amenities, plant, materials, etc.

1.3.4 Traffic Control, Crossings & Plant

Protect Existing Vehicle Crossing
Provide protection to existing vehicle crossings designated for use by construction traffic for the duration of the contract.

Comply with Regulatory Authority requirements for the installation of any temporary protection required for the crossing. Ensure the temporary protection is capable of supporting the heaviest loads to be delivered to the site.

Maintain the crossing to the required standard until it is no longer required for construction traffic. Carry out any required remedial/replacement work to the crossing, as a result of damage caused by the works during the contract period, in accordance with the requirements of the Regulatory Authority.

2 SITEWORKS

2.1 Preliminary

Refer to General Conditions of Contract and the Special Conditions in this Specification as appropriate. Read this section in conjunction with all other trade sections.

2.2 Compliance

Comply with the New Zealand Building Code 1992 including all revisions and amendments, Verification Methods where appropriate, and construction principles that are embodied in the Acceptable Solutions.

Comply with all relevant provisions and recommendations of:

3604:2011(NZS)	Timber-framed buildings
4402.4.1.1:1986(NZS)	Soil compaction tests - Determination of the dry density/water content relationship - Test 4.1.1 New Zealand standard compaction test
4431:1989(NZS)	Code of practice for earth fill for residential development
NZBC B1	Structure
NZBC E1	Surface Water

2.3 Site & Scope

2.3.1 Site

Note that no claims will be recognised on the grounds of insufficient description of existing site conditions in the Contract Documents.

Take great care to excavate exactly for the wall foundations to avoid any damage to adjacent property.

Take great care to excavate/cut up to the boundary, but not over.

2.3.2 Scope

This section covers:

Excavation of topsoil and stockpiling and final distribution (and new topsoil)

Excavation as required for foundations and slabs
Excavation as required for foundations, slabs, and drive

Supply, placing and compaction of hardfill basecourse and sand blinding

Supply and placing of any site concrete required

Supply and installation of retaining walls waterproofing systems and field drains
Backfilling behind retaining walls

Preparation for, and installation of exposed aggregate paving

Grass for disturbed areas around the works areas

2.4 Siteworks

2.4.1 Scope

General
This section sets out the general requirements for sitework necessary for the satisfactory completion of the contract works. All aspects of this work shall be carried out to comply with all statutory obligations and regulations of regulatory bodies controlling the execution of the contract works, and in accordance with the project design documentation.

2.4.2 Requirements

Safety
Comply with the Health and Safety at Work Act 2015 (HSWA), and with all relevant Health and Safety at Work Regulations 2016, and with all relevant WorkSafe New Zealand (WorkSafe) Approved Codes of Practice and WorkSafe Information and Guidance, in particular the 'OSH Guidelines For the Provision of Facilities and General Safety in the Construction Industry'.

Carry out all construction operations in accordance with the Contractor's project-specific Health and Safety Plan.

Compliance
Allow for all work associated with the safe and orderly execution of the siteworks, including complying with all Territorial Authority requirements, Building Consent, Building Act, Health and Safety requirements, and all other acts, laws, by-laws and regulations that may affect the execution of the works.

Existing Subsoil Conditions
Carry out all necessary inspections of existing subsoil conditions. Review and assess any factual geotechnical information available for the site or surrounding area included in the contract documents or from any other readily-available source (e.g. the Territorial Authority). Take full account of such information, and ensure that any proposed earthworks methodology and machinery is appropriate for the ground conditions.

Definition of Good Ground
Good Ground means any soil or rock capable of permanently withstanding an ultimate bearing pressure of 300 kPa (i.e. an allowable bearing pressure of 100 kPa using a factor of safety of 3.0), but excludes:
- Potentially compressible ground such as topsoil, soft soils such as clay which can be moulded easily in the fingers, and uncompacted loose gravel which contains obvious voids;

- Expansive soils being those that have a liquid limit of more than 50% when tested in accordance with NZS 4402:Test 2.2, and a linear shrinkage of more than 15% when tested, from the liquid limit, in accordance with NZS 4402:Test 2.6, and
- Any ground which could foreseeably experience movement of 25mm or greater for any reason including one or a combination of: land instability, ground creep, subsidence, (liquefaction, lateral spread - for the *Canterbury earthquake region only)*, seasonal swelling and shrinking, frost heave, changing ground water level, erosion, dissolution of soil in water, and effects of tree roots.

Soil below concrete foundations, footings and slabs-on-ground: unless specified otherwise, the general intent is to excavate to a stable, undisturbed sub-grade of 300 kPa ultimate bearing capacity.

Unless specified otherwise, soils (except those excluded from the Good Ground definition) tested with a dynamic cone penetrometer in accordance with NZS 4402: Test 6.5.2, shall be acceptable as good ground for building foundations if penetration resistance is no less than:
- 5 blows per 100mm at depths down to twice the footing width;
- 3 blows per 100mm at depths greater than twice the footing width.

Depths shall be measured from the underside of the proposed footing.

Stormwater & Sediment Control

Ensure the environmental protection of the site during the works. Carry out construction works and operations to ensure that they fully comply with the relevant controlling environmental authority's sediment control and stormwater discharge guidelines.

Provide suitable measures to prevent or minimise sediment generation and silt runoff in accordance with the requirements of the controlling Territorial Authority. Where required, detailed design of mitigation measures such as fences, cut off ditches, detention ponds, etc., shall be undertaken by a suitably qualified person employed by the Contractor.

Erosion and sediment control measures shall be maintained and remain in place until surface reinstatement has been established. If at any time the performance of the stormwater and sediment control measures, or ongoing review of them, indicates that they need to be extended or modified, the design modification and construction of these shall be undertaken by the Contractor at no extra cost to the Principal.

Basic management principles shall be implemented, in particular:
- areas being exposed at any one time shall be kept to a minimum;
- diversion ditches and catch drains or earth bunds to intercept and divert upslope stormwater runoff around areas of earthworks;
- waterborne silt captured by filter mesh fences, hay bales, vegetation buffer strips or settlement ponds/areas, in a way that manages adverse downstream effects;
- stockpiles of topsoil, excavated earth or other material shall not be positioned where they can be eroded or washed into any drain or watercourse.
- only pump water from trenches and detention areas using methods to prevent sediment entering any drain or watercourse.
- all soil-contaminated water shall be properly filtered before discharging into the stormwater drainage system.

Notifiable Work
Notify WorkSafe NZ of work that is notifiable (particular hazardous work) under the Health and Safety in Employment Regulations 1995, 24 hours before starting the work.

2.4.3 Clearing & Stripping

Clearing
Remove from the site all vegetation and obstructions within the area of the earthworks that are not designated as remaining in the contract documents.

Clearing shall be carried out as a separate operation before stripping and excavation. Clearing shall include complete removal from the site of lightweight structures, foundations, trees, tree stumps, logs, roots, scrub, grass and other vegetation, paving materials, fences and rubbish, and the off-site disposal of such items.

The removal of surface grass and weeds shall be completed as part of the topsoil stripping operation.

All trees within the limits of the earthworks shall be removed unless designated as remaining by the Architect/Designer and contract documents.

Protect trees and other vegetation designated as remaining within the earthworks area, and trees and other vegetation beyond the limits of the earthworks, from damage by these operations.

Extraction of tree stumps (if any) shall include the removal of roots greater than 25mm diameter.

Disposal of Cleared Material
Unless specified or directed otherwise, all material cleared shall become the property of the Contractor, and shall be removed from the site and disposed of in a safe and legal manner, and in such a manner as to cause as little inconvenience as possible to adjacent properties and the public. Pay all required tipping and landfill fees.

Stripping
Stripping shall be carried out as a separate operation after clearing and before excavation. All turf and organic topsoil shall be stripped from the areas subject to excavation before any excavation operations commence in these areas.

Except where limited by boundaries and existing structures or other limiting features, stripping shall extend no more than 500mm beyond the limits of areas subject to earthworks or construction, and to such depth as to avoid unnecessary over-excavation.

Topsoil to be kept, shall be stockpiled separately, away from other materials and as approved or directed by the Contract Administrator, for later re-spreading and use. Maintain and manage topsoil stockpiles to minimise contamination and erosion and to allow maximum reuse on the site.

2.4.4 Excavation

Excavation General

Excavate out all ground material above the finished levels or contours indicated on the design drawings, making due allowance for the construction of foundations, ground slabs, retaining walls, hard paving, underground utilities, landscaping and reinstatement of topsoil. The manner of excavations is the responsibility of the Contractor.

Excavation, as a minimum, shall include stripping of the site to remove all rubbish, noxious material and organic material, including topsoil, covering the area where the buildings, paving and other work is to be placed.

Excavations shall be undertaken in accordance with the 'Excavation Safety - Good Practice Guidelines'.

As necessary, cross reference and coordinate excavation work with the design drawings - Architectural, Structural, Building Services, Civil.

As necessary, coordinate excavation work with other trades as to set-out and timing to ensure that all cut faces are covered or finished etc. as soon as practicable after the excavation is complete.

If, in the opinion of the Contract Administrator, weather conditions or the excavation methods employed are such as to result in undue disturbance of adjacent ground or ground below final trimming level, suspend the work and complete the excavation in accordance with the Contract Administrator's instructions.

Excavation Inspections for Foundations

Give at least 48 hours' notice prior to commencement of each stage of excavation work. Where required, the proposed methods of completing each phase of the work shall be discussed and agreed with the Contract Administrator prior to starting.

Give at least 12 hours' notice of when a foundation inspection is required. Backfill, basecourse, site concrete, reinforcing, etc., shall not be placed in foundations until the Contract Administrator has been given adequate opportunity to inspect the relevant area.

Excavation of Unforeseen Obstructions & Ground Conditions

Notify the Contract Administrator immediately in the event that any of the following conditions are encountered during excavation:

- unexpected underground obstructions or voids;
- unforeseen variations in ground material types or properties;
- observations of buried vegetation, groundwater flows or seepages.

Excavation for Foundations

Foundation excavations shall be accurately cut true to line, level and angle, to minimum sizes and to the levels and grades required for all slabs, footings and foundations, and over the rest of the areas shown for levels adjustment. Foundation excavations shall extend down to firm undisturbed ground to the required depth. Refer to the foundation layout and details shown on the drawings.

Excavation for Slab Benches

Excavate and trim benches for slabs-on-ground level and true, allowing for all below-slab items such as granular hardfill base, blinding, insulation, etc., to the layout and details shown on the drawings.

Excavation for Services

Excavate trenches for all services, including drainage, plumbing, electrical, gas, telecommunications as indicated on the drawings. Cross reference and coordinate all excavations with the Architectural, Structural and Building Services drawings.

Inadequate Soil Bearing Capacity

If the soil bearing capacity is not to the determination required by NZS 3604:Section 3.1.3, the foundation shall be excavated further and backfilled as follows and/or to the BCA's requirements:

Below Footings: Mass concrete having a minimum strength of 10 MPa at 28 days.
Below Slabs on Ground: Hardfill, placed and tightly compacted in layers of 150mm maximum thickness.
Service Trenches: Hardfill, placed and tightly compacted in layers of 150mm maximum thickness.

Excavations Too Deep

Where an excavation is cut to a greater depth than called for by the drawings or the Contract Administrator's written instructions, fill to the required level in accordance with the Contract Administrator's instructions without additional cost. This may involve filling with site concrete.

Existing Soft Spots and Previously Filled Areas

Excavate and remove from site all material from soft spots and previously filled areas as directed by the Contract Administrator. The Contract Administrator shall advise in writing the area, extent and depth of excavation required, and the backfilling requirements.

Stockpile Excavation Spoil

Plan the excavation carefully to ensure that stockpiles will not interfere with construction work. Stockpile spoil sufficient for the filling, backfilling and reshaping required later, and to avoid overlaying areas outside the works area with material.

Excavation spoil shall be stockpiled in such a manner as not to jeopardise the stability of any trench, bank, batter, etc.; or to obstruct any road, crossing or driveway without authorised consent.

On completion, remove from site and dispose of all surplus stockpiled material, unless directed otherwise by the Contract Administrator. Leave the stockpile areas clean and free of spoil to the required standard.

Surplus Material

Remove from site and dispose of in a safe and legal manner all surplus material as it is excavated. Fouling of the site or adjoining public or private property and roads by spilled material is not permitted. Pay all tipping and landfill fees required.

Maintain Excavations
Secure and maintain excavations free from slips, erosion, water and other fluids or fallen materials. Provide and maintain stable battered slopes, pile liners, shoring, strutting, sheet piling, planking, pumps and other materials or plant necessary for carrying out and maintaining excavations. Remove these when no longer necessary.

Allow to protect exposed faces of temporary batters and slopes as necessary using an approved protection method, to prevent slumping and collapse.

Excavation Dewatering and Stormwater Control
Keep excavations free from ponding stormwater, and provide all pumps, drainage pipes and other equipment necessary for dewatering operations.

As necessary, dig suitable temporary sumps/pits outside the line of foundations to receive dewatering pumps.

If water enters concrete foundation excavations, the water shall be pumped out, and any soft materials not suitable for receiving concrete shall be removed and replaced with clean compacted hardfill or site concrete to the required levels.

Comply with the conditions of the Resource Consent/Building Consent related to stormwater and sediment control during construction, and employ suitable methods for minimising the runoff of sediment laden water from the site in accordance with accepted practices and guidelines. Refer to Requirements - Stormwater & Sediment Control.

Do not permit any flooding of property, footpaths or roadways as a result of excavation operations or dewatering measures, including the use of pumping equipment.

Provide channels, pipes or other approved means for effectively conveying groundwater to the nearest adequate and approved discharge point.

The discharge of groundwater to piped or open drains or channels shall only be permitted when prior approval from the controlling Territorial Authority has been obtained.

2.4.5 Earth Fill

Compliance & Testing
Earth fill works shall be carried out in accordance with NZS 4431 and the conditions of the Resource Consent/Building Consent. The Contractor is responsible for all associated earth fill testing and compliance.

Site-Won Earth Fill
Except for materials removed during clearing and stripping of topsoil or material designated as unsuitable for fill, site-won soils obtained from excavation may be used for general filling. Use only suitable material obtained from cut areas within the site. Site-won fill material shall be consistent, well graded non-organic, clean, uncontaminated soil material that is sourced on the site and

approved suitable for filling by having grading and moisture content properties that will allow re-compaction to 95% of maximum density.

Imported Earth Fill
Imported earth fill material shall be consistent, well graded non-organic, clean, uncontaminated soil material that is approved suitable for filling by having grading and moisture content properties that will allow re-compaction to 95% of maximum density. Do not use material which is organic or highly plastic. Obtain the required permissions and permits, and pay all associated costs and fees for imported earth fill.

Surface Preparation
Clear and strip the areas on which earth fill material is to be placed - refer to Clearing and Stripping. Before filling commences in any area of the site, the cleared and stripped surface shall be inspected and approved by the Contract Administrator.

Any soft or compressible areas discovered shall be excavated and refilled with suitable compacted material in accordance with the Contract Administrator's instructions. The exposed surfaces shall be compacted so as to achieve relative compaction at least equal to that specified for the fill to a depth of 150mm. Where necessary the ground shall be bladed until it is uniform, free of large clods and brought to suitable water content prior to compaction.

Finished Surfaces
Finished earth-fill surfaces shall conform to the levels, lines, grades and contours shown on the drawings or as directed by the Contract Administrator, within the tolerances specified.

Finished earth-fill surfaces for the construction of structures, concrete work, etc., shall be completed to the detailed dimensions. Where earth fill abuts undisturbed ground, the ground shall be trimmed and finished either side to gradually conform to the shape of the adjacent ground for a regular appearance.

Backfilling
The backfilling of earth fill around structures, and where required to bring undercut areas to finished levels and form, shall consist of selected earth fill material, evenly spread and compacted in uniform layers, with the use of suitable plant and equipment to achieve the specified relative compaction.

Do not, under any circumstances, substitute any specified hardfill backfill with earth backfill without prior written instruction from the Contract Administrator.

2.4.6 Hardfill & Blinding

Material
Hardfill material shall be good quality low fines crushed aggregate metal of approved origin, well graded and free of deleterious and organic material, and able to be compacted to a dense uniform layer. Hardfill material with obvious clumps of plastic content will not be accepted.
Except where specified otherwise, the maximum aggregate size shall not exceed 65mm and shall conform to the following:

Test Sieve Aperture	% Passing by Mass
63mm	100%
19mm	30-70%
4.75mm	10-40%
75 micron	10% maximum

Testing & Verification of Hardfill

The Contractor remains solely responsible for compliance of all hardfill materials used. Where a material appears to fall outside the recommended parameters, the Contractor shall employ an independent testing agency to confirm that the supplied material is within the specifications. All costs associated with non-complying hardfill material, including initial and subsequent testing, shall be at the Contractor's expense.

Backfilling with Hardfill

Backfill with hardfill around the sides of foundations and retaining walls, except where specified otherwise, with approved hardfill material as specified.

Hardfill material shall be good quality low fines crushed aggregate metal of approved origin, well graded, free of deleterious and organic material, and able to be compacted to a dense uniform layer.

Ensure that all timber, rubbish and other debris and other loose material is removed before backfilling. Avoid contaminating hardfill with excavated material during placement and compaction.

Place hardfill to bring levels up to the underside of the basecourse, site concrete, capillary break material or sand blinding as appropriate, with at least 150mm hardfill under ground beams, foundation pads and pits.

Spread loose hardfill in layers no more than 150mm thick, and compact with a vibrating roller, plate compactor or other suitable equipment to achieve not less than 95% of maximum dry density determined at optimum water content in accordance with NZS 4402:Test 4.1.1.

Compaction equipment shall follow systematic patterns of travel and make sufficient passes to ensure that the required compaction has been uniformly obtained everywhere for each layer. Care should be taken not to overwork the subgrade or to cause weaving during hardfill compaction. Any soft patches evident after compacting hardfill must be brought to the attention of the Contract Administrator for consideration.

NZS 3604 Granular Base to Underside of Slab-on-Grade

Granular hardfill base used as a capillary break to the underside of concrete slabs on grade shall consist of granular fill material conforming to NZS 3604: Section 7.5.3, and be systematically placed and compacted in horizontal layers no thicker than 150mm over the entire area beneath the proposed ground slab. Each layer shall be placed and compacted as a separate operation to subsequent layers.

The total thickness of the granular base shall be as indicated on the drawings, and no less than 75mm and no more than 600mm unless specified otherwise.

Compact each layer until the material is tightly bound together and does not visibly deform under the weight of a pressed adult heel. Compaction shall only be carried out with approved, special-purpose compaction equipment appropriate for the application. Compaction equipment shall follow systematic patterns of travel, and make sufficient passes to ensure that the required compaction has been uniformly obtained everywhere for each layer. Care should be taken not to overwork the subgrade or to cause weaving during hardfill compaction.

Blind the basecourse with a uniform layer of clean sand between 5mm and 25mm thick over all areas where a damp-proof membrane (DPM) is to be overlaid. Ensure the sand blinding layer is sufficiently compacted and smoothed before laying the DPM. Do not leave sand blinding exposed to the elements any longer than necessary, and install the DPM immediately or as soon as possible.

Hardfill Basecourse for Concrete & Asphalt Paving
Unless specified otherwise, granular hardfill base for insitu concrete paving or asphalt paving shall comply with current TNZ M/4 'Specification for Basecourse Aggregate', Grading AP40 and AP20.

The basecourse material shall be placed and compacted in layers with an uncompacted thickness between 50mm and 100mm thick. Each layer shall be compacted by multiple passes of approved, special-purpose compaction equipment appropriate for the application, to not less than 100% of maximum dry density determined at optimum water content in accordance with NZS 4402:Test 4.1.1.

Compaction of the basecourse shall take place at a water content appropriate to the plant being used. If water is required to be added, a fine mist spray shall be used and excess water shall be prevented from damaging the subgrade or sub-base. The uppermost layer shall be compacted and the finished surface proof rolled using a smooth steel wheeled roller of appropriate size

Site Concrete
Only as directed by the Contract Administrator and following approval of the excavation by the Contract Administrator, concrete footings to be cast on original ground may be covered for the full width of the excavated trench with site concrete to the specified thickness.

2.4.7 Drainage Aggregate

Retaining Wall Drainage Aggregate
Drainage aggregate behind retaining walls shall be 50-20mm open coarse graded, clean (preferably washed), aggregate or scoria. Place and compact free-draining backfill material behind retaining walls in layers no thicker than 200mm. Each layer shall be placed and suitably compacted as a separate operation to subsequent layers. Take all necessary precautions to ensure that any drain coil, tanking and/or damp-proofing membranes, and membrane protection are not damaged or compromised in any manner during backfilling.

3 CONCRETE

3.1 Preliminary

Refer to General Conditions of Contract and the Special Conditions in this Specification as appropriate. Read this section in conjunction with all other trade sections.

3.2 Compliance

Comply with the New Zealand Building Code 1992 including all revisions and amendments, Verification Methods where appropriate, and construction principles that are embodied in the Acceptable Solutions.

Comply with all relevant provisions and recommendations of:

1554.3:2014(AS/NZS)	Structural steel welding - Part 3: Welding of reinforcing steel
3101.1&2:2006(NZS)	Concrete Structures Standard
3104:2003(NZS)	Specification for concrete production
3109:1997(NZS)	Concrete construction
3112.1:1986(NZS)	Methods of test for concrete - Tests relating to fresh concrete
3112.2:1986(NZS)	Methods of test for concrete - Tests relating to the determination of strength of concrete
3114:1987(NZS)	Specification for concrete surface finishes
3121:2015(NZS)	Water and aggregate for concrete
3122:2009(NZS)	Specification for Portland and blended cements (General and special purpose)
3124:1987(NZS)	Specification for concrete construction for minor works
3125:1991(NZS)	Specification for portland-limestone filler cement
3404.1&2:1997(NZS)	Steel Structures Standard
3604:2011(NZS)	Timber-framed buildings
4455.1:2008(AS/NZS)	Masonry units, pavers, flags and segmental retaining wall units - Masonry units
4671:2001(AS/NZS)	Steel reinforcing materials
4672.1:2007(AS/NZS)	Steel prestressing materials - General requirements
4680:2006(AS/NZS)	Hot-dip galvanized (zinc) coatings on fabricated ferrous articles
NZBC B1	Structure
NZBC B2	Durability

3.3 Materials

3.3.1 Reinforcement

Reinforcing grades are identified by bar diameters prefixed with letters thus:

D indicates Grade 300E deformed bar
R indicates Grade 300E plain round bar

HD indicates Grade 500E deformed bar
HR indicates Grade 500E plain round bar
RB indicates Grade 500 Reidbar (uniquely deformation patterned bars)

Imported reinforcing steel will not be accepted without the prior approval of the Engineer. Reinforcing free of loose rust, mill scale, dirt, paint, oil, etc. and stored clear of the ground. Accurately place reinforcing and tie securely to prevent displacement during pouring of concrete. Tie wires must not project into specified concrete cover. Welding of reinforcing is not permitted unless specifically approved by the Engineer.

All terminal ends of reinforcing bars shall be hooked. Intersecting walls, beams and foundations shall contain return longitudinal reinforcement, as detailed for the intersecting members, all to NZS 3109 unless shown otherwise on the drawings.

Unless detailed otherwise all bars assumed to be continuous, with lap lengths not shown otherwise to be 40 diameters for grade 300 steel, 60 diameters for grade 500 steel, 250mm for mesh. Bars shall generally have minimum bends of five times their diameter.

Support slab steel at 1 metre maximum centres. Use plastic spacers for fairface concrete. Co-operate with others to accurately place all block/brick starters, as the bending of starters to the core position will not be permitted.

3.3.2 Concrete Cover

Concrete cover not shown otherwise to be:
- Foundations - 75mm where poured against ground, 50mm elsewhere.
- Beams and columns - 40mm (for main reinforcing).
- Slabs - 50mm where poured on ground, 40mm where exposed to weather, 30mm elsewhere.
- Walls - 40mm where exposed or against ground, 30mm elsewhere.

3.4 Workmanship

3.4.1 Qualifications

Where required by the NZ Building Act 2004 it is the building contractor's responsibility to ensure that all restricted building work is carried out by a Licensed Building Practitioner.

All work shall be carried out to the latest and best trade practise standards by experienced and competent tradesmen, familiar with the materials specified and installation techniques.

3.4.2 Formwork

Provide all necessary formwork to produce finished concrete to the required dimensions, surface finishes and structural tolerances (NZS 3109 table 4, note that slab surfaces shall not vary by more than 3mm from a 3m straightedge placed anywhere on the surface, and that this maximum variation shall extend over a minimum distance of 1m).

Design and construct formwork to withstand total weights and all construction loads. Formwork constructed tightly to prevent undue slurry leaks, with no wire formwork ties, and no part of the

formwork ties left within required concrete cover. 20 x 20mm fillet corners. Any release agents used shall be non staining and shall be compatible with all subsequently applied finishes.

Position construction/crack control joints (except where shown otherwise) under walls or elsewhere as approved, in accordance with the following maximum criteria:
- Slabs on ground - area 50 sq.m, length 7.5m.
- Suspended slabs - area 150 sq.m, length 15m.
- Walls - length 10m, lift 4m.

Coordinate with all trades to build in all necessary starters, fixings, anchorages, chases, sleeves, bolts, conduits, electrical / plumbing devices etc., and check their exact positioning before pouring. Coordinate with all trades to form all necessary holes, openings etc. with their positions and sizes exactly as required.

Strike formwork without shock or vibration, and without disturbing, damaging or overloading the structure. Fill all bolt holes as soon as practicable.

3.4.3 Concreting & Curing

All concrete shall be power mixed in a plant approved by the Ready Mixed Concrete Association for required grade. All structural concrete shall have a compressive strength of 25MPa at 28 days. 19mm max aggregate, 80mm slump, and with a maximum water cement ratio of 0.55.

Where considered desirable the manufacturer may add an air entrainment agent complying with NZS 3109 and 3119. No other additives may be used without specific approval of the engineer. Mixes shall be capable of being readily placed and compacted and finished as specified. The manufacturer shall carry out quality control testing to NZS 3104. All other concrete 20 MPa Ordinary Grade with maximum water cement ratio 0.7.

Note that appropriate cold weather pouring and curing techniques MUST be adopted if construction timing/temperatures so dictate.

Advise for inspection 24 hours before placing any concrete. Sequence and size of concrete pours to approval. No concrete pouring in wet weather. Clean out all formwork thoroughly before pouring. Handling, placing and vibration/compaction of concrete shall all be exactly to NZS 3109 requirements, and carried out by skilled operatives. Slabs power float finished to NZS 3114 U2 surface by kelly float, with steel troweling to a similar finish in corners etc., and to a U3 finish localized to resilient flooring areas.

Cure all concrete for 14 days. Do not use sprayed membranes. As soon as practicable pond all horizontal surfaces, or fully cover with polythene or hessian (kept wet). Periodically hose down all formwork. Stripped vertical surfaces shall be kept wet with perforated hoses or similar.

Form shrinkage control joints in concrete floor slabs-on-ground by saw cutting, without chipping, spalling and tearing the surface, to the locations and layout shown on the drawings. Saw cuts shall extend to a quarter of the depth of the slab. Saw cutting shall take place no later than 24 hours after

initial set for average ambient temperatures above 20°C, and 48 hours for average ambient temperatures below 20°C.

3.4.4 Surface Finishes

General floor slabs - U3 finish.

3.4.5 Documentation

Concrete delivery dockets shall state job, date and time of mixer loading, grade, strength, and slump. Dockets shall be kept and forwarded to the Architect/Designer. Water must NOT be added after the concrete leaves the plant.

3.5 Reinforcing Steel

3.5.1 Scope

Supply, bend, tie, place, fix, etc. all reinforcing steel required for concrete work and reinforced blockwork, as indicated on the approved drawings and as required for proper completion of the works, complete with accessories. All aspects of this work shall be carried out to comply with the requirements of the New Zealand Building Code and relevant Standards, and in accordance with the approved project design documentation, and with any relevant product manufacturers' recommendations.

All materials and workmanship shall conform to the requirements of NZS 3109, the New Zealand Building Code, and conditions of the Building Consent.

Reinforcing steel for concrete work shall be placed by the Reinforcing Steeworker.
Reinforcing steel for concrete blockwork shall be placed by the Concrete Blockworker.
Reinforcing steel and stressing strand/wire for precast concrete and prestressed precast concrete shall be placed by the Precast Concrete Manufacturer.

3.5.2 Requirements

Safety
Comply with the Health and Safety at Work Act 2015 (HSWA), and with all relevant Health and Safety at Work Regulations 2016, and with all relevant WorkSafe New Zealand (WorkSafe) Approved Codes of Practice and WorkSafe Information and Guidance, in particular the 'OSH Guidelines For the Provision of Facilities and General Safety in the Construction Industry'.

Carry out all construction operations in accordance with the Contractor's project-specific Health and Safety Plan.

Quality Assurance
Ensure that the reinforcement placed complies in all respects with the design drawings and specification. The reinforcing steelworker shall nominate a foreman reinforcing steel placer, or equivalent, for approval by the Contract Administrator before commencement on site. The foreman reinforcing steel placer shall inspect all completed sections of reinforcing steelwork and confirm that the work has been carried out in accordance with the design drawings and specification.

The foreman reinforcing steel placer will be required to sign a pre-pour reinforcing check list prepared by the Contractor prior to concrete being placed for that section of the works. A copy of the completed pre-pour checklist must be given to the Contract Administrator prior to observing the finished section of work.

During pouring, the reinforcing steelworker shall be available to correct any displaced or damaged reinforcing.

Inspections
Inform the Contract Administrator when reinforcing steel is being fixed. Give at least 1 working day's notice for the inspection of fixed steel reinforcing before concreting.

Testing
Provide reinforcing steel manufacturer's certificates of origin to the Contract Administrator. Should such certificates indicate the requirements of this specification may not be met, pay for such tests as required by the Contract Administrator to establish its compliance.

Producer Statement
Furnish a fully completed Producer Statement when the works are sufficiently complete and are ready for application for a Code Compliance Certificate. The Producer Statement shall cover all work completed under this section of the specification.

3.5.3 Reinforcing Steel

Reinforcing Steel
Reinforcing bars shall conform to AS/NZS 4671 Grade 300E or Grade 500E, except that the use of Grade 250N or Grade 500N is permitted where specifically indicated in the drawings and specifications. The use of Grade 500L bars is not permitted.

Grade 500E reinforcement shall be manufactured by Pacific Steel micro-alloy process. Alternative manufacturers of Grade 500E reinforcement will only be approved if written evidence is provided, including test certificates, verifying the product. The use of Grade 500E reinforcement manufactured by a quench and tempered process is not permitted.

All mesh shall be factory made and machine welded and conform to AS/NZS 4671.

Hard-drawn reinforcing mesh shall be Grade E complying with AS/NZS 4671.

Ductile reinforcing mesh shall be Grade E complying with AS/NZS 4671 in accordance with the requirements of NZBC B1/VM1.

Mill certificates must be provided to the Contract Administrator for all reinforcing steel used.

All bundles of reinforcing steel supplied to the job shall be clearly marked with numbers relating to the Bending Schedule and related drawing.

3.5.4 Bending of Bars

Bending of Bars

Bars shall be cut and bent in accordance with NZS 3109:Section 3 and to the dimensions and shapes indicated on the drawings.

Bend diameters for main reinforcing bars and of stirrups shall be as given by NZS 3109:Table 3.1.

Stirrups shall be bent to standard shapes as shown in NZS 3109.

Cranks or sets at laps shall have their inclined portions 12 diameters or a minimum of 300mm long unless specifically shown otherwise on the drawings.

Bars with bends or kinks not shown on the drawings shall not be used.

Bent bars shall not be rebent in the reverse direction unless specifically called for on the drawings. Rebending of steel reinforcement must be carried out to the steel manufacturer's requirements and only with approval of the Contract Administrator. Rebending of Grade 500E reinforcing steel is not permitted.

3.5.5 Laps, Cover & Tolerances

Laps in Reinforcing

The positions of reinforcing bar laps shall be as shown on the drawings. The positions of reinforcing bar laps other than those detailed must be approved in writing by the Engineer/Designer before cutting and bending commences. All lapping bars shall be tied to each other.

Lap lengths shall generally be as detailed on the drawings, but in any case not less than 400mm. Where laps have not been specifically detailed, laps shall comply with the table below.

Bar Diameter	Grade 300E Deformed	Grade 500E Deformed
10mm	400mm	600mm
12mm	480mm	720mm
16mm	640mm	960mm
20mm	800mm	1200mm
25mm	1000mm	1500mm
32mm	1280mm	1920mm

Lap lengths for plain round bars shall be two times the length given in the table above for the corresponding grade of deformed bar.

Laps to reinforcing mesh shall fully comply with the requirements of NZS 3101 but shall not be less than 225mm at all edges, and in any case give a minimum of 2 overlapping cross wires plus 50mm. Where Ductile 500E mesh is lapped, the lap length between outer cross bars shall be to the manufacturer's requirements.

Cover

Minimum cover shall be as specified on the drawings or otherwise as specified in NZS 3109. Covers specified on the drawings shall take precedence over those specified in NZS3109.

The ends of wire ties shall be turned away from the concrete face to maintain cover. Wire ties shall not be tied to formwork.

Tolerances

Tolerances for bending and fixing of reinforcing steel and fixing of prestressing tendons, ducts and strands shall comply with NZS 3109.

Unless tighter tolerances are specified the following tolerances shall apply:

Bending tolerances:
- Cranks stirrups and ties where -
  the member depth is less than 200mm: +0mm, -5 mm;
  the member depth is 200mm or more: +0mm, -10mm;
- Other steel: +0mm, -15mm;
- Length of straight bars: +0mm, -15mm;
- Length of straight bars where length fitment is not critical: +20mm.

Tolerances on bar spacing/position:
- Spacing of main bars in beams and columns: ±10mm;
- Distance between layers of main steel except it shall not be less than 25mm: ±5mm;
- Distance between bars along the face of walls or slabs: ±20mm;
- Spacing of stirrups or ties in beams and columns: ±20mm;
- Longitudinal position of splice: ±30mm.

Tolerances on concrete cover relative to the values specified and shown on the drawings are:
- In slabs and walls: +10mm; -0mm;
- In beams and columns: +10mm; -0mm;
- At ends of members: +25mm; -0mm.

3.5.6 Placing & Fixing

Fixing

Reinforcement shall prior to commencement of concrete placement, be placed, supported and secured against displacement in accordance with the specified tolerances.

Metal supports and tie wires to the reinforcing shall not extend into the concrete cover zone.

Reinforcement shall be supported by appropriate proprietary chairs or spacers, or tied up with wire, such that the durability and strength of the structure is not compromised. The types of distance pieces and spacers to be used shall be such as to firmly hold the steel against displacement. Cementitious spacers shall at least match the quality of the concrete being cast and shall have a minimum compressive strength of 40 MPa.

Fixing of reinforcing steel shall conform to NZS 3109. Bars shall be positioned accurately according to the drawings and securely tied with wire ties to form a rigid cage. Particular attention shall be paid to the correct lapping of all steel and laps shall be checked after fixing.

Take all necessary care when handling and fixing Grade 500E reinforcing bars. Do not use or place any excessively damaged Grade 500E bar, such damaged bars shall be rejected and replaced.

Reinforcing steel shall not be cut or bent on site without the Contract Administrator's specific approval.

All starters shall project the minimum distance prescribed for lap lengths unless detailed otherwise. All starters and other reinforcing protruding from a concrete pour shall be securely braced to prevent any movement during concreting. Starters shall NOT be placed into concrete after it has been poured.

Clean reinforcement prior to concreting to remove any dirt, release agent, slurry and other contaminants likely to affect bonding to concrete. Thoroughly clean all projecting cast-in starter bars before installing subsequent reinforcing steel.

Concrete Slab-on Grade Floor

Supply and place mesh to the slab-on-grade or the toppings over precast concrete floor units as detailed. Mesh laps shall fully comply with NZS 3101 but shall not be less than 225mm minimum at all edges, and in any case give a minimum of 2 overlapping cross wires plus 50mm. Sheets shall be cut at 4-sheet overlapping corner junctions so as to limit the overlapping to two of the four sheets.

All mesh is to extend to within 75mm of the perimeter of the building floor edges.

Mesh shall be continuous over pads and foundation beams unless additional compensating lap bars are placed across the top to lap with the mesh reinforcement each side. Unless noted otherwise, all saddle bars and other steel shown over the beams on the drawings are additional to the mesh and cannot be included in the required area of compensating steel.

Place topping tie bars as detailed on the drawings.

3.6 Concrete

3.6.1 Scope

This section sets out the requirements for the supply, forming, casting and finishing of all concrete and concrete elements, including precast concrete elements if required, and the building in of all cast-in items, required for the satisfactory completion of the works. All aspects of this work shall be carried out to comply with the requirements of the New Zealand Building Code and relevant Standards, and in accordance with the project design documentation, and with any relevant product manufacturers' recommendations.

The supply and fixing of reinforcing for concrete is covered in separate specification Reinforcing Steel. The supply and placing of blockwork grout is covered in separate specification section Blockwork.

The following is a list and a general description of the extent of Insitu Concrete work, which are more specifically defined in the contract documents, required for the completion of the contract works:

3.6.2 Requirements

Safety

Comply with the Health and Safety at Work Act 2015 (HSWA), and with all relevant Health and Safety at Work Regulations 2016, and with all relevant WorkSafe New Zealand (WorkSafe) Approved Codes of Practice and WorkSafe Information and Guidance, in particular the 'OSH Guidelines For the Provision of Facilities and General Safety in the Construction Industry'.

Precast concrete shall be handled in accordance with the WorkSafe 'Approved Code of Practice for The Safe Handling, Transportation and Erection of Precast Concrete'.

Carry out all construction operations in accordance with the Contractor's project-specific Health and Safety Plan.

Quality Assurance - Option 1

Ensure that the construction of all concrete work complies in all respects with the design drawings and the specifications.

Prepare and submit details of the quality assurance procedures for concrete work for approval. These procedures should encompass all aspects of concrete construction.

The quality assurance procedure shall encompass all aspects of concrete construction including, but not limited to:

- concrete quality; and
- formwork quality; and
- construction tolerances; and
- reinforcing steel placement; and
- cast-in items; and
- concrete finishes.

Notify the name of the concrete construction representative to be responsible for the quality control of concrete work. The nominated representative shall complete and sign a written quality control checklist for each on-site concrete pour. A copy of each completed checklist shall be submitted to the Contract Administrator before pouring commences, and in sufficient time for pre-pour inspections to be carried out. The format and detail of the checklist shall be agreed to prior to the commencement of any concrete work.

Supply evidence of concrete production quality standards in advance of construction in accordance with the requirements of NZS 3109.

Tolerances

Unless specified otherwise, dimensional tolerances of concrete work shall conform to NZS 3109: Table 5.2 - 'Tolerance for insitu construction', and NZS 3109: Table 5.1 - 'Tolerance for precast components', and to NZS 3114 for off-the-form and unformed surface tolerances.

To ensure that elements such as external cladding, precast items, and lifts will properly fit the building, maintain responsibility for the accurate control of the overall set-out of the concrete structure and concrete elements.

An absolute tolerance on the position of all structural elements of 15mm shall be maintained over the full height of the structure in all directions.

Employ a registered surveyor to reset all gridlines and column positions at every second floor. Column locations, slab edge positions and positions of openings shall be adjusted to ensure that each in within 10mm of the correct position through the height of the building.

Take particular care to ensure that individual members and the building structure as a whole do not twist over the height of the building.

Erection & Temporary Works

Maintain responsibility for all erection, propping and temporary support of the works, and any other works required for the completion of the contract works, including lifting design, rigging analysis, propping and shoring design.

The extent and details of the erection systems, propping, etc., will be dependent on proposed construction methods, transport and handling methods, and construction programme. Where required, engage a Chartered Professional Engineer experienced in this type of work to undertake the design and supervision of erection systems, propping, etc. Provide written confirmation that this has been done to the Contract Administrator.

Any additional reinforcement to suit temporary erection or support methods shall be the responsibility of the Contractor.

Inspections

All stages of the concrete construction work shall be reviewed in accordance with the requirements of NZS 3109: Section 1.3, and the conditions of the Building Consent.

All inspections shall be properly documented by the Contractor. Provide all necessary quality control checklists prior to pouring and in sufficient time for pre-pour inspection.

Give notice and provide reasonable opportunity to inspect the section of work prior to pouring. Give at least 1 working day's notice of intent to place concrete in any area.

Any instructions issued shall be carried out before concrete placing commences. Unless approval is given by the Contract Administrator and/or BCA, no concrete shall be placed in that section of work. Any concrete placed without authorisation may require removal from the works at the Contractor's expense.

Materials & Workmanship

Adhere to the requirements of NZS 3109, except where specified otherwise or instructed by the Contract Administrator.

Producer Statement

Furnish a fully completed Producer Statement when the works are sufficiently complete and are ready for application for a Code Compliance Certificate. The Producer Statement shall cover all concrete construction work completed under this section of the specification - Concrete.

3.6.3 Reinforcement

Refer to separate section Reinforcing Steel.

Store reinforcing steel material flat, clear of the ground, on evenly spaced bearers, in a secure area clear of the building works. Keep materials protected from damage and contamination at all times. Do not use damaged, distorted or defective material.

Ensure that all reinforcing is adequately supported off the ground and remains clean from delivery until placing. Before placing reinforcing steel, check that it is free of any loose mill scale and any contamination that may impair bonding to concrete.

Take all necessary measures to ensure that reinforcing steel is not damaged or displaced during concreting.

3.6.4 Formwork

Formwork shall conform to NZS 3109: Section 5, and comply with the provisions of NZS 3114 applicable to the class of surface finish specified.

Formwork and falsework shall have sufficient strength to retain and support the wet concrete being placed to the required profiles and tolerances.

The formwork surface finish shall be of suitable quality necessary to produce the specified concrete finish. Any formwork with a deteriorated or damaged surface that does not meet the requirements of the surface finish shall not be used.

Fair-faced concrete formwork shall be constructed so as to provide straight and true angles and so as to produce cast surfaces within a maximum tolerance of 5mm of the given dimensions, and without visible offsets, bulges, or misalignment of the concrete. Form neat, clean arrised edges, except where chamfers are indicated on the drawings or required to match existing detail - in which case the fillets shall form part of the mould and not be loosely placed.

Plywood formwork shall be constructed from Formply plywood sheets or C-grade faced standard plywood sheets (according to concrete finish), placed in a regular pattern and tightly butted together to avoid grout loss. The joints shall be sealed to prevent grout loss. Plywood formwork shall not be permitted to stain visually exposed concrete. Unless indicated otherwise on the drawings, timber or plywood formwork shall have 20mm fillets at the inside corners of beams, columns and walls.

The formwork face shall be adequately clean and treated with a general purpose concrete form release agent in accordance with the manufacturer's requirements. Diesel oil based products are not permitted. Care shall be taken to ensure that the release agent is kept out of contact with the

reinforcement and is compatible with any subsequent paint or finish system applied to the finished concrete.

All ties and spreaders shall be of an approved type and placed so as to leave a regular, neat pattern on the concrete surface when withdrawn and filled. The ends of cast-in ties shall be set at least 40mm from the concrete surface. Wire ties are not permitted for the purpose of restraining, securing or supporting formwork.

Steel formwork shall be used where specified or appropriate, with all joints welded and ground smooth and flush to a uniform surface. All internal corners shall be formed by folding the steel, not butting.
Any surface required with a ribbed or grooved surface shall be formed by adhering battens of the appropriate profile to the form bed and/or mould, and treated generally as above.

Erected formwork shall be set and checked for dimensional accuracy and alignment before, during and after concreting, and any damaged formwork replaced. All debris shall be removed from the formwork immediately before concrete is placed.

When not in use, formwork shall be cleaned, oiled and stored flat on an even surface, and protected from exposure to moisture and contamination on all sides.

Formwork shall be removed without shock or vibration and in such a manner as to prevent damage and to permit the concrete to take the imposed stresses gradually. Do not permit bars or other tools to lever against set concrete when removing formwork. Any damage to the concrete occurring during removal shall be repaired by an approved method at the Contractor's expense.

Removal of formwork in multi-storey structures shall conform to NZS 3109: Section 5.4.5.

3.6.5 Finishes

Slab Finishes
Refer to the Schedule of Surface Finishes below for the finishes required unless specified otherwise in the contract documents.

Arrange the pouring to allow adequate time for floating and finishing.

Floating and any subsequent finishing shall be at the correct time to obtain the quality of compaction and finish required. No finishing work shall be carried out on any area where there is free surface water. The application of dry cement or sand to absorb free water is not permitted.

All trowelling ridges shall be removed while soft, or by subsequent light grinding. Slabs not fulfilling the standard of finish required shall be ground smooth or otherwise treated to the satisfaction of the Contract Administrator. Care shall be taken to avoid ridges where a newly poured slab meets existing edges.

3.6.6 Concrete

Normal Concrete

Unless specified otherwise herein, all concrete except for 'no fines' concrete shall be Normal Concrete (N) Grade as defined by NZS 3109, manufactured in accordance with NZS 3104 from a New Zealand Ready Mixed Concrete Association audited plant, with sufficient cement quantity to ensure satisfactory finish and durability.

Normal Concrete maximum aggregate size shall be 19mm. Calcium chloride shall not be used.

Cement shall comply with:
NZS 3122: 'Specification for Portland and blended cements (General and special purpose)';
NZS 3125: 'Specification for portland-limestone filler cement'.

Chemical admixtures use in Normal Concrete shall comply with AS 1478.

'No fines' concrete shall be coarse aggregate/cement/water mix without sand but with selected aggregate where necessary.

The aggregate used, and overall mix design (including the use of additives) of Normal Concrete, shall meet the provisions of Section 2 of CCANZ TR 3 Alkali Silica Reaction. Evidence of this may be required by the Contract Administrator. Use of low alkali cements or aggregates from an alternative source may be required where the aggregate contains deleterious material.

Normal Concrete used in the works shall have the following minimum strengths at 28 days unless noted otherwise on the drawings:
- Blinding concrete: *10 MPa.*
- 'No fines' concrete: no minimum strength.
- Bored piles: *25 MPa.*
- Foundation pads and strip footings: *25 MPa.*
- Floor slab-on-grade: *30 MPa.*
- Superstructure generally: *30 MPa.*
- Precast concrete: *30 MPa.*
- Toppings to proprietary suspended floor systems: *30 MPa.*
- All other structural concrete not specifically mentioned: *25 MPa.*
- Driveways, pavements, landscaping: *20 MPa.*

Supply details of Normal Concrete mix designs for review prior to the ordering of any concrete.

Where a mix from the Normal Concrete range is specified with a special requirement as specified in NZS 3109, then it becomes a Special Concrete (S) - refer to Special Concrete.

3.6.7 Concreting

Handling, Placing & Compaction

All concreting shall conform to NZS 3109 unless modified in this specification.

Concrete shall be transported, handled, placed and compacted so as to:
- Prevent segregation or loss of materials;
- Produce a monolithic mass between planned joints or the extremities of members, or both;
- Completely fill the formwork to the intended level, expel entrapped air, and closely surround all reinforcement, tendons, ducts, anchorages and embedments; and
- Provide the specified finish to the formed surfaces of the member;
- Ensure there is no contamination of the concrete;
- Ensure that the transporting, handling, placing and compaction of the concrete is complete before setting reactions have passed the point which prevents the concrete from attaining its potential fully cured properties.

Concrete shall not be pumped without the Contract Administrator's approval. Where such approval is given, only a standard 'structural' concrete mix design may be used - the use of a pump mix design will not be accepted.

Vibrators shall be used for the compaction of all concrete, including floor slabs. Immersion vibrators shall be moved to new positions as frequently as necessary to ensure uniform vibration of the whole mass and fully compacted concrete. On no account shall immersion vibrators be allowed to come into contact with the face of formwork. Vibrators shall not be used to transport concrete along the forms.

Curing & Protection
All concrete shall be cured in accordance with NZS 3109:Section 7.8.

The use of concrete curing compounds shall be only as agreed with the Contract Administrator (specifically for each occasion before it is used). Ensure that any agreed concrete curing compound is compatible with subsequent floor coverings or surface treatments, including any sealers, paints, waterproofing membranes, etc.

All concrete elements shall be protected from damage at all times. Any damaged items shall be repaired or remade to the satisfaction of the Contract Administrator.

Unfavourable Conditions
Take all necessary precautions and measures during unfavourable conditions, as required by NZS 3109: Section 7.2, to ensure quality and finish of the concrete is not compromised or reduced in any manner.

3.6.8 Construction Joints

Construction Joints
The location, type and detail of construction joints shall be as specified and shown on the drawings. Construction joints shall not be repositioned or eliminated from the locations shown on the drawings without approval. Where a construction joint is not specified or shown on the drawings, the location, type and detail of the joint must be approved before work commences.

Shrinkage-Control Joints - Saw Cutting
Shrinkage-control joints shall be formed in concrete slab-on-grade floors by saw-cut grooves to the layout and details shown on the drawings.

Saw cutting shall be carried out as soon as possible, after the concrete has set and before shrinkage cracking has occurred - typically within 24 hours of pouring, and without excessive chipping, spalling or tearing of the concrete. Saw cuts shall be straight and true and within 10mm of the true joint alignment.

Unless shown otherwise on the drawings, saw cut grooves shall extend to one quarter of the of the slab thickness, and be between 3-5mm in width. Under no circumstances shall the reinforcement through the joint be cut by saw cutting.

As detailed on the drawings, the joint shall be sealed with the specified sealant.

3.6.9 Penetrations and Detailing

Form all penetrations, rebates, fillets, nibs, upstands, and other detailing as shown on the drawings. Sleeves, conduits, pipes, cores or other penetrations shall not be cast in concrete unless they are indicated on the drawings. If not indicated, they must be approved by the Contract Administrator. All penetrations and concrete detailing shall be accurately positioned and formed at the time of pouring the concrete (without movement or displacement).

Set concrete shall not be cut, hacked or cored unless specific approval is obtained from the Contract Administrator.

3.6.10 Foundations

Form concrete foundations to the layout and details shown on the drawings. Concrete foundations shall be cast against formwork on each side unless otherwise approved by the Contract Administrator. Where approval is given to cast against ground, an additional 25mm thickness of concrete will be required on each unformed face to provide additional cover.

Allow to underpin or otherwise support adjacent foundations as necessary to ensure complete stability and no damage to adjacent structures at all times.

Cast in sleeves for all pipes and cables that pass through foundations - coordinate the location of each sleeve with the relevant trade.

Give notice and provide reasonable opportunity to inspect all foundation excavations before placing any tidy concrete or hardfill.

3.6.11 On-Ground Floor Slabs

Concrete Floor Slab-on-Grade
Unless specified or shown otherwise, cast ground-bearing concrete floor slabs on a damp proof membrane (DPM) sheet concrete underlay, laid over maximum 25mm thick layer of compacted sand blinding.

The concrete mix should be designed to ensure durability and shrinkage. The use of low sand percentage, a low water content, superplasticiser and air entrainment is required.

Cement content shall not be less than 300 kg/m^3, regardless of the minimum specified concrete strength.

The slab shall be constructed between formed construction joints as shown on the drawings, and in a sequence so that two adjacent sections are not poured one after the other.

Immediately after screeding the slab shall be smoothed using a bull float. Finishing shall be carried out with the use of a power float; initially operated with the blades flat, and finally operated with the blades slightly tilted.

All slabs shall have construction joints or saw-cuts at not more than 5.0m intervals in each direction, unless shown otherwise on the drawings.

Along lines of saw-cuts accurately cut out alternate bars of the floor reinforcement and mark the proposed line of saw-cut from outside the pour area. The time of sawing will vary depending on weather conditions, and shall be such as to prevent uncontrolled cracking of the slab. Sawing of the joints shall commence as early as possible, typically within 12-18 hours, and when the concrete has sufficiently hardened to permit cutting without excessive chipping, spalling and tearing. Saw-cuts shall be to the depth shown on the drawings and shall be made using a self-propelled diamond-tipped floor saw machine.

Damp-Proof Membrane

Damp-Proof Membrane (DPM) - refer to separate section Waterproofing for specification of damp proof membrane.

Damp-proof membrane shall be continuous under slabs-on-ground and under foundations. Sheet DPM joints shall be overlapped minimum 200mm and continuously sealed with a pressure-sensitive tape or as recommended by the manufacturer.

Damp-proof membrane shall be turned up or down against foundations, walls and columns as appropriate, and tape-seal around protrusions and service pipes.

Protect the DPM during all operations until the floor slab is complete. Repair any damage that may occur or replace damaged DPM with new sections.

Shrinkage-Control Joints - Saw Cutting

Shrinkage-control joints shall be formed in concrete slab-on-grade floors by saw-cut grooves to the layout and details shown on the drawings.

Saw cutting shall be carried out as soon as possible, after the concrete has set and before shrinkage cracking has occurred - typically within 24 hours of pouring, and without excessive chipping, spalling or tearing of the concrete. Saw cuts shall be straight and true and within 10mm of the true joint alignment.

Unless shown otherwise on the drawings, saw cut grooves shall extend to one quarter of the of the slab thickness, and be between 3-5mm in width. Under no circumstances shall the reinforcement through the joint be cut by saw cutting.

4 BLOCKWORK

4.1 Preliminary

Refer to General Conditions of Contract and the Special Conditions in this Specification as appropriate. Read this section in conjunction with all other trade sections.

4.2 Compliance

Comply with the New Zealand Building Code 1992 including all revisions and amendments, Verification Methods where appropriate, and construction principles that are embodied in the Acceptable Solutions.

Comply with all relevant provisions and recommendations of:

3103:1991(NZS)	Specification for sands for mortars and plasters
3104:2003(NZS)	Specification for concrete production
3109:1997(NZS)	Concrete construction
3112.1:1986(NZS)	Methods of test for concrete - Tests relating to fresh concrete
3121:2015(NZS)	Water and aggregate for concrete
4210:2001(NZS)	Masonry construction: Materials and workmanship
4229:2013(NZS)	Concrete masonry buildings not requiring specific engineering design
4230:2004(NZS)	Design of reinforced concrete masonry structures
4455.1:2008(AS/NZS)	Masonry units, pavers, flags and segmental retaining wall units - Masonry units
4455.3:2008(AS/NZS)	Masonry units, pavers, flags and segmental retaining wall units - Segmental retaining wall units
4671:2001(AS/NZS)	Steel reinforcing materials
CCANZ CP 01:2011	Code of Practice for Weathertight Concrete and Concrete Masonry Construction
NZBC B1	Structure
NZBC B2	Durability

4.3 Workmanship

4.3.1 Workmanship

Where required by the NZ Building Act 2004 it is the building contractor's responsibility to ensure that all restricted building work is carried out by a Licensed Building Practitioner.

All work shall only be carried out by Licensed Building Practitioners - Bricklaying and Blocklaying. Submit evidence on request of experience, relevant qualifications, LBP Licence - Bricklaying & Blocklaying, New Zealand Masonry Trades Association (NZMTA) Member Registration.

All walls shall be true to line, level and plumb, and with perpends 'kept' (the mean alignment of all corners, edges and conspicuous lines shall be +/-3mm in 3 metres, without local irregularities). All

concrete blockwork stretcher bond, with joints width 10mm +/- 2mm (blockwork with a number of joints exceeding this tolerance may be required to be demolished and rebuilt). Webs and ends to be fully buttered.

No retempering of partially set or dried mortar. Insitu concrete at the base of walls shall be scabbled to provide a key for mortar and grout. All part masonry units that are required shall be sawn cut to clean straight lines. Keep wall faces clean as the work proceeds and regularly inspect for mortar droppings etc.

Mortar joints shall be burnished smooth and pointed to a light concave to achieve full compaction of mortar to a depth not exceeding 6mm after the initial stiffening has occurred.

Coordinate with all trades to build in all required starters, anchors, bolts, fixings, sleeves, conduits, chases, or electrical or plumbing devices etc. (conduits vertical only unless otherwise is approved). Check that positions are correct before pouring. Coordinate with all trades to form all necessary holes, openings etc. with positions and sizes exactly as required.

During the progress of work every care must be taken to prevent moisture penetration of the blocks. No blocklaying shall proceed during wet weather. Turn back scaffold planks at night and during rain. Upon completion of each days work, exposed tops of block walls shall be protected from weather.

On completion thoroughly clean all surfaces affected by this work.

4.3.2 Concrete Blockwork

The bottom course of blocks shall be inverted open end bond beams to provide full length clean out duct. Clean out ports shall be formed by neatly sawing out a 100 wide x 200 high section of shell at each vertical rod. Sprinkle sand on the scabbled surface inside the first course to facilitate removal of mortar droppings.

Reinforcement shall be as specified on the drawings. Vertical rods tied to starter rods. Hook horizontal and vertical rods around the trimmer rods at openings, ends and tops of walls. Delay grouting until the mortar has sufficient strength. Thoroughly clean the grout space. Close ports only after inspection and approval; close by mortaring the face shell neatly in place, and brace them to prevent displacement during grouting.

For epoxy fixed starter bars drill holes to the depths indicated on the drawings and 6mm larger in diameter than the nominal size of the fixing. Thoroughly clean out the holes with a stiff brush and compressed air. Use an approved product, injected to completely fill the hole prior to inserting the fixing.

All lapped reinforcing steel shall be in contact and shall be tied. Starter bars which have not been cast in the correct location shall not be cranked into position - refer to Engineer for instruction.

4.3.3 Grouting of Cells & Cavities

Fill blockwork using a squeeze type pump. Ensure that grout is prevented from flowing on to exposed walls, floors etc. Use a pencil vibrator (and have a standby unit on site), and ensure all grout is

thoroughly vibrated. All blockwork cells shall be completely filled without segregation of the mix and the filling rate shall be controlled so as to avoid blowing out joints. Grouting is to be high-lift grouting.

4.3.4 Works Inspection

Blockwork shall be constructed and inspected to the requirements for Grade B masonry. Inspection by the Engineer will be in accordance with NZS 4230. Give 24 hours notice for inspections of blockwork and completed reinforcement placement, with the clean out ports left open, prior to grouting.

4.4 Concrete Blockwork

4.4.1 Scope

Supply and construct all concrete blockwork elements, including laying block, placing reinforcement and grout filling, to the locations and details shown on the approved drawings. All aspects of this work shall be carried out to comply with the requirements of the New Zealand Building Code and relevant Standards, and in accordance with the approved project design documentation, and with any relevant product manufacturers' recommendations.

The following is a list and a general description of the extent of Concrete Blockwork, which are more specifically defined in the contract documents, required for the completion of the contract works:

4.4.2 Requirements

Safety

Comply with the Health and Safety at Work Act 2015 (HSWA), and with all relevant Health and Safety at Work Regulations 2016, and with all relevant WorkSafe New Zealand (WorkSafe) Approved Codes of Practice and WorkSafe Information and Guidance, in particular the 'OSH Guidelines For the Provision of Facilities and General Safety in the Construction Industry'.

Carry out all construction operations in accordance with the Contractor's project-specific Health and Safety Plan.

Workmanship

Where required by the NZ Building Act 2004 it is the building Contractor's responsibility to ensure that all restricted building work is carried out by a Licensed Building Practitioner.

All work shall only be carried out by Licensed Building Practitioners - Bricklaying and Blocklaying. Submit evidence on request of experience, relevant qualifications, LBP Licence - Bricklaying & Blocklaying, New Zealand Masonry Trades Association (NZMTA) Member Registration.

Blockwork materials and workmanship shall comply with the requirements of NZS 4210.

All work shall be by or under the direct supervision of a Registered Structural Mason, registered with NZ Masonry Trades Registration Board, and carried out by competent, experienced tradespersons who are fully conversant with the detailed provisions of NZS 4210.

Tolerances of blockwork construction shall conform to NZS 4210: Table 2.2, except where specified otherwise on the drawings.

Observation Types

Blockwork shall be constructed and supervised in accordance with NZS 4230: Table 3.1 in respect to the observation type applied to the blockwork. The observation type(s) of all blockwork elements shall be as specified on the drawings.

Type C Observation:

- Observation Requirement: May be built without construction observation by a design engineer or a nominated representative thereof.
- Admissible Use: Elastic and nominally ductile structures. Face loaded walls designed for limited ductility.
- Maximum Specified Compressive Strength: 4 MPa.

Porirua City Council
Approved Consent Document
24 NOV 2017
0560/17
BCA Number
David Nolan
On behalf of Porirua City Council

Type B Observation:

- Observation Requirement: Shall be inspected by a design engineer or by a nominated representative thereof, who may be a mason deemed to comply with the competency requirements of NZS 4210. Such inspection shall establish that the design is being interpreted correctly and that the work is being carried out generally as specified.
- Admissible Use: Elastic, nominally ductile, limited ductile or ductile structures.
- Maximum Specified Compressive Strength: 12 MPa.

Type A Observation:

- Observation Requirements: In addition to the inspection required of Type B, Type A observation of masonry shall require construction supervision at all critical stages by a person approved by a design engineer, having appropriate knowledge/experience of correct masonry trade practices and reporting to a design engineer, such as to ensure that the standards of materials and workmanship applying on the job are of a consistently high quality commensurate with the achievement of superior strengths. Masonry shall be constructed using a mason deemed to comply with the competency requirements of NZS 4210.
- Admissible Use: Elastic, nominally ductile, limited ductile or ductile structures.
- Maximum Specified Compressive Strength: ≥12 MPa.

Inspections

Blockwork construction shall be inspected in accordance with NZS 4210: Clause 1.4, as appropriate for the specified type of masonry (observation type).

Before grouting of any section of blockwork, give at least 24 hour's notice for the inspection of the blockwork. Any instructions issued shall be carried out before grouting any blockwork.

Temporary Bracing

Provide and maintain temporary support to block walls until the walls have been filled, the grout filling has cured, and the walls are adequately built into the final structure. Any damage resulting from failure or neglect to provide adequate support to concrete block walls during construction shall be repaired at the Blocklayer's expense.

Co-operation

Co-operate with other trades to ensure that all preliminary and preparatory works are completed to specification and as shown on the drawings.

Coordinate with all trades to accurately position and build in all required starters, anchors, bolts, fixings, sleeves, conduits, chases, electrical and/or plumbing fixtures and fittings, etc. (conduits shall be vertical only unless approved otherwise). Coordinate with all trades to form all necessary holes, openings, etc., with positions and sizes exactly as required.

Remove all rubbish and waste material from the site as the work progresses. On completion of the work, leave the site clear of all associated rubbish, waste and excess material.

Producer Statement

Furnish a fully completed Producer Statement when the works are sufficiently complete and ready for application for a Code Compliance Certificate. The Producer Statement shall cover all blockwork completed under this section of the specification - Concrete Blockwork.

4.4.3 Blocks

All concrete blocks shall be of hollow type masonry units from an approved manufacturer, In accordance with AS/NZS 4455. Blocks shall be of an approved standard grey colour, properly cured, square and true to shape and size. Blocks shall be manufactured from standard aggregates to NZS 3121. Lightweight aggregate blocks shall NOT be used.

Suppliers of masonry units shall provide the following information:
- Unconfined compressive strength as determined by AS/NZS 4456: Part 4.
- Work size tolerances as determined by AS/NZS 4456: Part 3.

Excessively damaged or otherwise irregular blocks will NOT be accepted. Where block types are shown on the drawings, the blocks used shall be such as to achieve the joint patterns shown on the drawings and be capable of being placed to suit reinforcing steelwork already in place.

Blocks shall be cut as necessary, to fit dimensions or to suit reinforcing. Cutting shall be done by means of a special hydraulic block cutting machine or carborundum saw, and exposed edges shall be clean, square and even.

4.4.4 Mortar

Mortar shall conform with the requirements of NZS 4210: Section 2.2.

The minimum 28 day compressive strength of mortar shall be 12.5 MPa. Allow to test mortar in accordance with Appendix 2.A of NZS 4210. A test sample of at least three cylindrical specimens shall be taken for every 200m^2 of wall, and the test results submitted for review.

Sand for mortar shall comply with NZS 3103, and water for mortar shall comply with NZS 3121. Sands used for mortar exposed to the weather shall not have a chloride content in excess of 0.04 % by mass.

Chemical admixtures shall comply with NZS 3113 or AS 1478, and used in accordance with the manufacturer's requirements. Calcium chloride based accelerators shall not be used in any mortar exposed to weather.

4.4.5 Grout

Grout shall be coarse grout in accordance with NZS 4210: Section 2.3. Grout shall be mixed at an approved ready mix plant in accordance with NZS 3104. Site mixing will only be permitted with the express and prior approval of the Contract Administrator.

The minimum 28 day compressive strength of the grout shall be 17.5 MPa for all durability zones except Seaspray (B2), where the minimum compressive strength shall be 25 MPa. Allow to test grout in accordance with Appendix 2.A of NZS 4210. A test sample of at least three cylindrical specimens shall be taken for every 200m² of wall filled, and the test results submitted for review.

4.4.6 Reinforcement

Refer to separate section Reinforcing Steel for specification of reinforcement.

Reinforcing steel for blockwork shall comply with the requirements of NZS 4210, be bent and installed as detailed on the drawings, and fixed by the Blocklayer.

Vertical reinforcing shall be positioned in advance of laying, and horizontal reinforcing positioned when the appropriate block course is laid. Vertical steel, including starters shall be central, unless noted otherwise on the drawings. Vertical reinforcement shall be fixed to starter bars before block laying commences.

Ensure correct location of reinforcing starter bars according to the required block layout. Starter bars cast out of position shall NOT be bent over into the correct position. In the event of starter bars being out of position, the Contract Administrator shall be notified and instruct any remedial work required.

Lap lengths shall be a minimum of 450mm long and not less than that specified below, unless specified otherwise on the drawings:
- Grade300E reinforcing: 40 bar diameters;
- Grade500E reinforcing: 70 bar diameters.

Lapping bars shall be tied to each other. The position of laps other than those detailed shall be as approved by the Contract Administrator before placing reinforcing steel.

4.4.7 Block Laying

Building In

The Blocklayer shall coordinate as necessary with other trades and make all necessary provisions for built-in items.

Refer to and coordinate with the Architectural Drawings to ensure all blocks around openings, etc., are correctly laid with sills, reveals and rebates as necessary.

As work proceeds, allow to drill and cut out neat rectangular holes in the concrete blocks for flush boxes for cable services outlets, switches and controls, etc., as shown on the Architectural and/or Building Services drawings. Holes shall be accurately positioned and carefully cut to exact sizes.

As the work proceeds, build into blockwork all necessary bolts, steelwork and metalwork items and other fittings and fixings as shown on the drawings or otherwise required for the work.

Cleaning Out

All walls shall have clean-out ports at the bottom with inverted open ended blocks for the length of the wall. Clean-out ports shall be spaced to match all wall starter locations and at no greater than 800mm centres.

Cleaning out of grout spaces shall include the removal of any mortar from ties and reinforcing bars, the removal of any mortar protruding into cells or cavities at joints, and the removal of all mortar droppings and other loose material.

Clean-out openings shall be left open for the inspection of tied laps in the reinforcement.

Clean-out openings shall be closed after inspection and prior to grouting by boxing with timber on concealed surfaces and by mortaring-in face shells at visible surfaces. Clean-out boxing shall be braced, and supports shall be provided to closure units at ends of walls and at openings as required to resist grout pressure.

Pointing & Finishing

As the work proceeds, blockwork joints shall be neatly and expertly pointed with joints of mortar as specified on the drawings in accordance with NZS 4210: Section 2.7.7.

Concave tooled to a depth not exceeding 6 mm and burnished after the initial stiffening has occurred.

Raked out pointed and tooled to a depth not exceeding 6 mm after the initial stiffening has occurred

Blockwork to be covered or plastered in the finished work shall have joints compacted by tooling and left flush with the block surface. Add additional mortar before tooling to ensure joints are completely full.

On completion of walls, clean down and remove all mortar projections and irregularities. Patch and make good around all pipes, conduits, etc., penetrating the blockwalls. Make good any defects in the pointing.

Control Joints

Construct vertical control joints where shown on the drawings and at not more than 8m spacing along all walls where not specifically shown. Confirm in advance the location of all control joints when they are not shown on the drawings.

Control joints shall be continuous vertical joints. Reinforcement and filling grout shall be continuous through the joint unless shown otherwise.

Mortar on internal wall faces in a control joint shall be laid and painted after all shrinkage has taken place and at least 14 days after grouting the wall. Seal control joints on external wall faces with Sikaflex AT-Façade sealant or approved equivalent high-performance movement joint sealant.

Seismic Movement Joints
Maintain clearances to columns and other structural elements as shown on the drawings. Fill joints with approved compressible fire proofing material and sealant as specified and shown on the drawings.

4.4.8 Grout Filling

General
Grouting shall not commence until the mortar joints have attained sufficient strength to resist blow-outs and grout spaces have been cleaned out. The height of individual lifts in any pour should be limited so as to prevent blow-outs.

All block cells shall be filled, unless specified otherwise on the drawings. Cells that are not to be filled shall be covered to prevent the entry of grout, provided that this shall be done in such a manner that the mortar bond between courses is not impaired.

Grout in each lift shall be thoroughly compacted in order to fill all voids and ensure bond between grout and masonry or construction joints.

Ensure all face shells, supports, forms, etc., are adequate to prevent bursting of the wall during filling. Do not pour grout until spaces to be filled have been checked for debris and restrictions.

During grout filling around reinforcement ensure that the position of reinforcing is correctly maintained. Prevent any movement of projecting reinforcement while the grout is setting.

5 BRICKWORK

5.1 Preliminary

Refer to General Conditions of Contract and the Special Conditions in this Specification as appropriate. Read this section in conjunction with all other trade sections.

5.2 Compliance

Comply with the New Zealand Building Code 1992 including all revisions and amendments, Verification Methods where appropriate, and construction principles that are embodied in the Acceptable Solutions.

Comply with all relevant provisions and recommendations of:

2699.1:2000(AS/NZS)	Built-in components for masonry construction - Wall ties
3103:1991(NZS)	Specification for sands for mortars and plasters
3604:2011(NZS)	Timber-framed buildings
4210:2001(NZS)	Masonry construction: Materials and workmanship
4236:2002(SNZHB)	Masonry veneer wall cladding
NZBC B2	Durability
NZBC E2/AS1	External Moisture

5.3 Brickwork

5.3.1 Scope

Supply and lay the selected bricks to form the brick elements as shown on the drawings. All aspects of this work shall be in accordance with the related compliance documents and as shown on the drawings.

5.3.2 Workmanship

Where required by the NZ Building Act 2004 it is the building contractor's responsibility to ensure that all restricted building work is carried out by a Licensed Building Practitioner.

All work shall only be carried out by Licensed Building Practitioners - Bricklaying and Blocklaying, and conform to the requirements of NZS 4210.

Submit evidence on request of experience, relevant qualifications, LBP Licence - Bricklaying & Blocklaying, New Zealand Masonry Trades Association (NZMTA) Member Registration.

Co-operate with the concretor and carpenter in the setting out of the works.
Co-operate with other trades to ensure that all preliminary and preparatory works, including all framing, membranes, wraps, rigid air barriers, and flashings, all relevant clearances, and any other related works, are completed to specification and as shown on the drawings.
Co-ordinate with trades the locations of pipes, outlets, cables, meter boards and other fittings installed by others.

All brick veneer walls shall be true to line, level and plumb, and within the tolerances tabled in NZS 4210 and SNZ HB4236. All brickwork laid to stretcher bond pattern, with joints width 10mm +/- 3mm.

5.3.3 Installation

Install all brickwork related damp proof courses in accordance with the requirements of NZBC E2/AS1 and to the details shown on the drawings.

Mortar shall have a minimum compressive strength of 12.5 MPa, and be manufactured from cement, sand, lime, and admixtures, and be accurately measured and mixed in accordance with NZS 4210. Mineral oxide pigment dosages shall be to NZS 4210.

Form all necessary openings, reveals, sills, weepholes, separation and control joints, and cavities to the locations and details shown on the drawings, and in accordance with the requirements of NZBC E2/AS1 and NZS 4210. Install necessary vermin stops. Weatherproof all separation joints to the details shown on the drawings.

Wall tie type, durability, spacing, fixing and installation shall be as defined in NZBC E2/AS1 Tables 18A, 18B, 18C, and NZS 4210.

Install all necessary flashings to openings, and other locations as required, to the details shown on the drawings and in accordance with NZBC E2/AS1 requirements.

During the progress of work every care must be taken to prevent moisture penetration of the bricks. No bricklaying shall proceed during wet weather. Upon completion of each days work, exposed tops of brick veneers shall be protected from inclement weather.
Comply with NZS 4210 Cold Weather Construction and Hot Weather Construction requirements.

On completion or the works leave brickwork clean and free of marks and staining. All brickwork cleaning shall be done to the brick manufacturer's recommendations.
Thoroughly clean all other surfaces affected by the brickworks.

5.3.4 Mortar Pointing

Mortar joints shall be concave, tooled to a depth not exceeding 6mm and burnished after the initial stiffening has occurred.

6 WATERPROOFING

6.1 Preliminary

Refer to General Conditions of Contract and the Special Conditions in this Specification as appropriate. Read this section in conjunction with all other trade sections.

6.2 Compliance

Comply with the New Zealand Building Code 1992 including all revisions and amendments, Verification Methods where appropriate, and construction principles that are embodied in the Acceptable Solutions.

Comply with all relevant provisions and recommendations of:

NZBC B2 Durability

6.3 ARDEX Shelterseal Damp-Proof Membranes

6.3.1 Scope

Supply and install ARDEX Shelterseal Damp-Proof Membranes, as specified herein, to the locations identified on the drawings, complete with all system components and accessories required for proper installation and performance. All aspects of this work shall be in complete accordance with the manufacturer's requirements and technical literature (check www.ardex.co.nz, or call 0800 217 339 for the latest editions), BRANZ Appraisal No.462 (2016), other relevant product manufacturers' recommendations.

No substitutions are permitted for ARDEX Shelterseal Damp-Proof Membranes.

The following is a list and a general description of the extent of the ARDEX Shelterseal damp proofing works, which are more specifically defined in the contract documents, required for the completion of the contract works:

6.3.2 Requirements

Safety

Comply with the Health and Safety at Work Act 2015 (HSWA), and with all relevant Health and Safety at Work Regulations 2016, and with all relevant WorkSafe New Zealand (WorkSafe) Approved Codes of Practice and WorkSafe Information and Guidance, particularly those for construction and building maintenance.

Warranty

ARDEX NZ Ltd Warranty. Warrant this work under normal use and environmental conditions, against failure of materials and application, according to the warranty conditions.

- 15 Years' Warranty Materials and Workmanship - for all ARDEX Shelterseal damp proofing products.
- Provide the ARDEX Warranty on the manufacturer's standard warranty form.
- Commence the warranty from the date of practical completion.

Include a copy of the ARDEX Waterproofing 'Care & Maintenance' document with the Warranty.

Quality Assurance
Maintain and comply with industry-recognised quality control and assurance procedures to ensure that all stages of ARDEX Shelterseal damp proofing work are carried out to the highest standard.

Substitutions
ARDEX Shelterseal damp proofing products shall be as specified herein and as indicated on the approved drawings. The substitution of ARDEX branded products for alternative brands is not permitted under any circumstances.

The substitution of a specified ARDEX product for an alternative ARDEX branded product by the Applicator shall only be permitted with the Architect's/Designer's authorisation, and shall be at no additional cost to the Principal. Should any resultant extra work and/or redesign work be required to accommodate alternative ARDEX branded products to satisfy design, performance and compliance requirements, then the cost of these shall be borne by the Applicator.

Defective Materials & Work
Should defective materials and/or work be found at any time before the final acceptance of the work, it shall be rejected. Rejected ARDEX Shelterseal damp proofing materials and work shall be repaired and/or replaced to the satisfaction of the Architect/Designer, without delay and at no additional cost to the Principal.

Should a problem be encountered with any ARDEX product during use or delivery, immediately contact the ARDEX Technical Hotline on 0800 217 339. Do not continue to use the product that is not performing to specification or expectation. Keep the product in question and where possible, the document batch numbers and/or manufacturing dates.

6.3.3 Performance

Durability
Durability. The durability requirements of ARDEX Shelterseal damp-proof membranes shall meet the requirements of NZBC B2/AS1: Table 1, according to Building Element, Component, Situation/Function, and Duration.

6.3.4 Membrane System

WPM 3000X - Single Layer System
ARDEX WPM 3000X Single Layer Membrane System. Incorporating one layer of ARDEX WPM 3000X damp proof membrane. Installed in accordance with the manufacturer's requirements and BRANZ Appraisal No.462, to the locations and details shown on the approved drawings.

Installed Location:

6.3.5 Components & Accessories

WPM 3000X

ARDEX WPM 3000X (Shelterseal 3000X). A 1.5mm thick, self-adhesive, bituminous waterproofing membrane with a cross-laminated HDPE laminated protective facing. Manufactured from SBS (styrene-butadiene-styrene) modified rubberised asphalt. Supplied in 1m x 20m long rolls. Application temperature range - from +5°C to +45°C.

Suitable for use on insitu and precast concrete, concrete masonry and polystyrene ICF substrates, on below-grade foundations and footings, floor slabs, basement walls, pits, etc.

Install ARDEX WPM 3000X to properly prepared and primed substrates in accordance with the manufacturer's requirements and BRANZ Appraisal No.462 (2010).

Ancillary Components

As necessary, install Ardex Shelterseal damp-proof membranes in conjunction with the following ancillary components in strict accordance with ARDEX requirements:

- ARDEX WPM 240 Primer: A solvent-based bitumen-modified primer.

- ARDEX WPM 247 Primer: A water-based bitumen emulsion primer.

- ARDEX WA98: A solvent-based contact adhesive used as a primer in difficult drying conditions.

6.3.6 Co-operation

Co-operate with other trades to ensure that all preliminary and preparatory works are completed to specification and as shown on the drawings.

Coordinate with other trades to install ARDEX Shelterseal damp-proof membranes as required.

6.3.7 Workmanship

Where required by the NZ Building Act 2004 it is the building contractor's responsibility to ensure that all restricted building work is carried out by a Licensed Building Practitioner.

All preparation and installation work shall be carried out by ARDEX Approved Applicators, familiar with the specified products and installation techniques, to fully comply with all ARDEX NZ Ltd warranty requirements and in accordance with the manufacturer's installation requirements, BRANZ Appraisal No.426, and as noted and detailed on the drawings.

All work shall be such as to leave a neat, efficient, robust and waterproof installation.

Do not install membranes in wet weather conditions, or when temperatures and humidity are outside the manufacturer's permissible range.

Make all necessary provisions to protect adjacent finished work and surfaces from damage and contamination during installation.

As necessary, protect installed membranes from damage and contamination during subsequent construction activities until permanently covered.

6.3.8 Delivery & Handling

Take delivery of materials undamaged. Reject any item found to be defective or damaged and contact the supplier for replacement.

Store materials and accessories undercover, in a weatherproof environment, on a flat, even surface, and out of direct sunlight, in accordance with the manufacturer's requirements. Membrane rolls must be stored upright, on end. Keep stored materials and accessories dry and protected from damage, moisture and contamination, and away from ignition sources and open flame at all times.

Do not use damaged or defective materials and products, or products that are beyond the designated shelf life.

Should a problem be encountered with any ARDEX product, immediately contact the ARDEX Technical Hotline on 0800 217 339. Do not continue to use the product that is not performing to specification or expectation. Keep samples of the product in question and where possible, document batch numbers and/or manufacturing dates.

Handle the specified materials and products in accordance with the manufacturer's recommendations and in a manner that prevents damage, puncturing and marking.

Handle ArdRDEX Shelterseal damp proofing components and accessories in accordance with the manufacturer's requirements as set out in the relevant Technical Data Sheets and in a manner that prevents damage of the material or reduces its performance.

Installers shall be familiar with and comply with the manufacturer's Material Safety Data Sheet precautions for use, and use appropriate safety gear when handling materials.

Installers shall conform with all relevant WorkSafe NZ Guidelines and Codes of Practice - including the OSH Guidelines For the Provision of Facilities and General Safety in the Construction Industry.

6.3.9 Preparation

General

Substrates shall be structurally sound and dimensionally stable, even and smooth, clean, dry, and free from dirt, dust, grease, oil, wax, paint residue, loose plaster and laitance, curing compounds and other materials and contaminants likely to cause damage to the damp-proof membrane or affect its bonding and performance.

Carry out all necessary inspections and preparatory work to all substrates in accordance with the manufacturer's product Technical Data Sheet prior to application of Ardex surface primers and damp-proof membranes.

Check that the substrate is free of voids and depressions, and is in correct alignment - true to line, level and/or plumb and to the falls indicated on the drawings.

Check that all embedded items are correctly installed, and that all substrate edges are completed as detailed.

Confirm the location of all movement control joints prior to commencement of the works, and ensure that they are appropriately treated. Do not cover or bridge control joints without the use of the manufacturer's recommended bond breaker tapes, flexible waterproofing bands, corners, sleeves, sealants etc, appropriate for the application and the damp-proof membrane.

The commencement of work on each section of damp-proofing shall be deemed to indicate full acceptance by the ARDEX Approved Applicator that all preparatory works by other trades are appropriate to achieve the required finished results.

Carry out all necessary substrate priming in accordance with ARDEX requirements.

Concrete Block Walls
Reinforced Concrete Walls - check all aspects of preparatory works, including but not limited to:
- Old or soiled blockwork must be thoroughly cleaned and washed and allowed to dry.
- Check that mortar joints have been struck flush with the concrete blocks and tooled tight.
- Check the surface for damage - have any surface damage appropriately remedied.
- Check junctions with adjacent substrates and elements, ensuring that all necessary works have been completed as detailed.
- Ensure the substrate is dry and free of all loose material, sharp protrusions, hollows, etc., prior to priming and membrane application.
- Carry out all necessary substrate priming in accordance with ARDEX requirements.

6.3.10 Installation

General
Install Ardex Shelterseal damp-proof membranes strictly in accordance with ARDEX requirements, including all surface preparation and priming.

ARDEX Shelterseal damp-proof membranes must be installed over properly prepared and primed substrates according to ARDEX requirements.

Commence membrane installation from low point with upper sheets lapped over lower sheets.

Internal and external corners of single layer systems must be reinforced with an extra layer of membrane 300mm wide centred on the corner junction.

Peel off the external protective film to expose the adhesive surface of the membrane and apply the membrane firmly to the primed substrate with joints pressure sealed. Joints shall be lapped minimum 60mm for side-laps and 100mm for end-laps, and neatly finished straight and parallel. Avoid entrapped air as the sheet is applied - remove trapped air only in accordance with ARDEX requirements.

Double-layer system membranes shall be run in the same direction, and with the lapped joints of the upper layer off-set 500mm from the lower layer.

All pipe and duct penetrations and protruding items shall be correctly flashed and sealed and completed to Ardex details.

Finish any control joints in accordance with ARDEX requirements. Consult ARDEX regarding any detail where a standard detail does not exist.

Protect membranes during installation and during subsequent construction activities until permanently covered. Inspect installed membranes before permanently covering, and repair or replace any damaged or defective membrane in accordance with ARDEX requirements.

6.3.11 Completion

Check that ARDEX Shelterseal damp-proof membranes have been installed correctly, and that all seams, joints and membrane detailing have been finished correctly.

Check damp-proof membranes for defects, surface damage and punctures - carry out any repairs in strict accordance with the manufacturer's instructions before permanently covering. Replace damaged membranes when beyond repair.

Ensure ARDEX damp-proofing membranes are adequately protected from damage and contamination while exposed to subsequent construction activities.

Leave this work complete, watertight and leak-free, and to the required standard in accordance with ARDEX NZ Ltd requirements before permanently covering.

Clean up thoroughly, and leave adjacent surfaces and finished work clean and free of damage and contamination. Remove all associated rubbish and excess materials from site.

Issue to the Owner a copy of the manufacturer's maintenance requirements (if applicable), and a copy of the ARDEX NZ Ltd Warranty.

7 CARPENTRY

7.1 Preliminary

Refer to General Conditions of Contract and the Special Conditions in this Specification as appropriate. Read this section in conjunction with all other trade sections.

7.2 Compliance

Comply with the New Zealand Building Code 1992 including all revisions and amendments, Verification Methods where appropriate, and construction principles that are embodied in the Acceptable Solutions.

Comply with all relevant provisions and recommendations of:

1080.1:2012(AS/NZS)	Timber - Methods of test - Method 1: Moisture content
1170.2:2011(AS/NZS)	Structural design actions - Wind actions
1170.5:2004(NZS)	Structural design actions - Earthquake actions - New Zealand
1491:1996(AS/NZS)	Finger jointed structural timber
1859.1:2004(AS/NZS)	Reconstituted wood-based panels - Specifications - Particleboard
1859.2:2004(AS/NZS)	Reconstituted wood-based panels - Specifications - Dry-processed fibreboard
2269.0:2012(AS/NZS)	Plywood - Structural - Part 0: Specifications
2270:2006(AS/NZS)	Plywood and blockboard for interior use
2271:2004(AS/NZS)	Plywood and blockboard for exterior use
2295:2006(NZS)	Pliable, permeable building underlays
2588:1998(AS/NZS)	Gypsum plasterboard
2589:2017(AS/NZS)	Gypsum linings - Application and finishing
2785:2000(AS/NZS)	Suspended ceilings - Design and installation
2904:1995(AS/NZS)	Damp-proof courses and flashings
2908.2:2000(AS/NZS)	Cellulose-cement products - Flat sheets
3601:1973(NZS)	Metric dimensions for timber
3602:2003(NZS)	Timber and wood-based products for use in building
3603:1993(NZS)	Timber Structures Standard
3604:2011(NZS)	Timber-framed buildings
3617:1979(NZS)	Specification for profiles of weatherboards, fascia boards, and flooring
3618:1984(NZS)	Mechanical stress grading of timber
3622:2004(NZS)	Verification of timber properties
3631:1988(NZS)	New Zealand timber grading rules
3640:2003(NZS)	Chemical preservation of round and sawn timber
4200.1:1994(AS/NZS)	Pliable building membranes and underlays - Materials
4200.2:1994(AS/NZS)	Pliable building membranes and underlays - Installation

	requirements
4219:2009(NZS)	Seismic performance of engineering systems in buildings
4389:2015(AS/NZS)	Roof safety mesh
4505:2012(AS/NZS)	Garage doors and other large access doors
4859.1:2002(AS/NZS)	Materials for the thermal insulation of buildings - General criteria and technical provisions
AWCI Code of Practice	For Design, Installation and Seismic Restraint of Suspended Ceilings
NZBC B2	Durability
NZBC E2	External moisture
NZBC E2/AS1	External Moisture

7.3 General

This section includes the receiving, stacking and storage of all Carpenter's materials and the fabrication, erection and fixing of all framing, sheathings and finishing timbers, including all work incidental to neatly finishing in other trades and all temporary work and temporary bracing.

The Carpenter shall attend upon all trades, and shall supply and fix all obviously necessary but not specifically mentioned fixings and materials.

7.4 Timber Framing

7.4.1 Scope

Supply and install timber framing to the floors, walls, roofs, and other timber framed elements, as identified and detailed on the drawings. All aspects of this work shall be in accordance with NZS 3604, product manufacturers' recommendations, and as shown on the drawings and the specification.

7.4.2 Workmanship

Where required by the NZ Building Act 2004 it is the building contractor's responsibility to ensure that all restricted building work is carried out by a Licensed Building Practitioner.

All work shall be carried out to current best trade practise by experienced and competent tradesmen, familiar with the materials and installation techniques, in accordance with NZS 3604 and as shown on the drawings.

Co-operate with other trades to ensure that all preliminary and preparatory works are completed to specification and as shown on the drawings prior to installing timber framing.
Co-ordinate with other trades to install timber framing as required.

7.4.3 Timber Framing

Timber Grade and Quality
Unless otherwise noted or specified on the drawings or specification, all framing timber shall be minimum structural grade SG 8 Radiata pine in accordance with NZS 3622.
Framing timber shall be seasoned or kiln dried, and be straight and true and free from wind, warp and

distortion, and in lengths suitable for the members required, and shall have a moisture content of between 12% and 18% before installation.
Do not used damaged, faulty or defective materials.

Timber Treatment
All non-durable timber framing shall be appropriately treated against moisture and/or insect decay by treatment plants with recognised quality assurance systems that are administered by the Timber Preservation Council (NZTPC). Treatment of timber and wood-based building products shall be to the requirements of NZS 3602 as an absolute minimum, and all treated timber shall be identified and marked as required.
Carefully manage treated framing during installation to avoid accidental use of timber with a lower performance or durability treatment than that required or specified.

Storage & Handling
Check timber framing upon delivery and reject sub-standard or damaged material.
Store timber framing dry under cover, fillet stacked and well clear of the ground, and protect from damage, moisture, and contamination.
Ensure all appropriate personal protection equipment is worn at all times when handling and cutting treated framing.

Framing Installation
All timber framing members, including all dwanging, strutting, blocking, bracing etc, shall be sized, setout, fitted and fixed to the requirements of NZS 3604 and as shown on the drawings to accommodate structural loadings, cladding and lining setout and support, and the installation of other building components, fixtures and fittings.

All framing shall be erected without deviation, true to line, level, angle and plumb, and evenly aligned and square, and within the tolerances allowed in NZS 3604 Table 2.1. Framing members accurately cut, lapped, housed, joined, and seated so as to provide full contact over the bearing surfaces.

Temporarily prop, brace, tie, and secure framing members and elements as required until the framing is complete and self supporting. Leave in place for safety purposes as long as required.

Protect timber framing as required during installation against damage and moisture, and against significant variation of moisture content until ready for lining. Avoid ponding of water around floor plates.

Concrete Separation
Separate timber framing with an approved continuous damp proof course when in direct contact with concrete or masonry. Ensure that the DPC material is compatible with the timber treatment.
Free draining separations to external vertical faces shall be 12mm minimum and as noted on the drawings.

Timber Re-treatment
All cut or drilled surfaces of H4 and H5 treated timber framing shall be flood coat re-treated, with a suitable product recommended by the original treatment plant, before installation.

Edge Notching and Centre Holes

The notching, checking, and boring of framing members shall be in strict accordance with the requirements of NZS 3604.

Avoided checking and cutting where possible and keep to such dimensions so as not to prejudice the purpose for which the member is used. Keep edge notching to a minimum and where possible use centrally bored holes instead.

Concealed services pipes and wiring shall not project beyond the framing face and where possible shall be beyond the lining's fixing reach.

Framing Protection

Protect timber framing as required during installation against damage and moisture, and against significant variation of moisture content until ready for lining. Avoid ponding of water around floor plates.

Built-up Framing Members

Except for jack studs, bottom plates and top plates, framing members may be substituted with built-up members in accordance with the limitations of NZS 3604 2.4.4.7 with the prior approval of the Architect/Designer only.

7.4.4 Steel Fixings

Fastenings and Connectors

Unless otherwise noted or specified, timber framing fastenings and connectors shall be as specified in the relevant fixing schedules of NZS 3604 or have an equivalent capacity as specified therein. Timber framing connectors and fixings shall comply with the product information as required in NZS 3604 2.4.6, and shall be used and installed in accordance with the manufacturer's recommendations. Pre-drill nail holes in split-prone framing as necessary.

Durability of Fixings & Fastenings

Unless otherwise noted or specified, the minimum durability of timber framing fixings and fastenings, excluding nails and screws, shall comply with the durability requirements of NZS 3604 Table 4.1.

Galvanised steel fixing components, excluding nails and screws, shall have galvanised coating masses in accordance with NZS 3604 Table 4.2.

Unless noted or specified otherwise, the materials for nails and screws shall be as given in NZS 3604 Table 4.3.

Steel fixings and fastenings in contact with timber treated with copper based timber preservatives (H3.2 or higher) shall be in accordance with NZS 3604 4.4.4.

Stainless steel nails shall be minimum Grade 304 unless otherwise specified or noted.

Bolts and Coachscrews

Unless specified or shown otherwise, all bolted and coach screwed connections shall be M12 or M16 in accordance with the relevant fixing requirements given in NZS 3604.

Bolted and coach screwed connections shall have either a 50mm x 3mm square, or a 55mm x 3mm round, washer to each head and nut for M12 and M16 fixings. Washers shall be of the same material and durability as the bolt or coach screw.

7.4.5 Sub Floor Framing

Wall plates shall be as shown on the drawings and fixed to the foundation walls with proprietary anchors with 50mm x 3mm square washers at maximum 900mm centres, and within 150mm from the plate ends, in accordance with NZS 3604 7.5.12.2.

Anchor manufacturer, brand name & type:

Unless specified or shown otherwise, stringers for 1.5 kPa floors shall be to the dimensions and fixing spacings given in NZS 3604 Table 6.5. Stringer fixings shall be M12 bolts set 100mm minimum into the foundation wall, or proprietary anchor with a minimum capacity of 4.5kN vertically, and 7.3kN parallel to the stringer.

Anchor brand name & type:

7.4.6 Floor Framing

Unless specified or shown otherwise, timber floor joists shall be to the dimensions and spacings given in NZS 3604 Table 7.1.
Floor joists shall be laid on edge true to line and level, have a minimum support bearing of 32mm (except when cantilevered), and so that any crook will straighten under load.
Floor joists shall be jointed over supports (except when cantilevered beyond the support) in accordance with NZS 3604 7.1.1.7.

Unless specified or shown otherwise, boundary joists shall be continuous 25mm thick x joist depth as lateral support, and fixed to each end of the floor joists in accordance with NZS 3604 Table 7.5.

Boundary joist size:

Unless specified or shown otherwise, solid blocking shall be 45mm thick x joist depth and installed between joist ends at maximum 1.8m centre spacings as lateral edge support, and fixed in accordance with NZS 3604 Table 7.5. Floor joists supported by by a foundation wall shall have solid blocking over a distance of minimum 1.8m at joist ends.

Floor joists with a span of 2.5m or greater and a depth of at least 4 times the joist thickness shall have 45mm thick continuous solid blocking at mid span, fixed in accordance with NZS 3604 Table 7.5.

Non-load bearing walls, with a bracing element, parallel to floor joists and not supported by a floor joist, shall be supported by minimum 90mm x 45mm solid blocking on-edge at maximum 1.2m centres and at each side of door openings.

Unless specified or shown otherwise cantilevered floor joists for 2 kPa floors shall to the dimensions and spacings given in NZS 3604 Table 7.2, and shall be continuous over the outermost support as required by NZS 3604 7.1.5.3(a).

Unless specified or shown otherwise trimmers shall be fixed to trimming joists by proprietary joist hangers in accordance with NZS 3604 7.1.6.5(b).

Hanger brand name & type:

7.4.7 Wall Framing

Plates

Top and bottom plates shall be to the dimensions and layout shown on the drawings. Unless specified or shown otherwise, top and bottom plates shall be fixed in accordance with NZS 3604 7.5.12 and Tables 8.18 and 8.19, true to line and level or angle.

Joints in top plates shall be made over a stud or over blocking between studs, and all top plate connections shall be in accordance with NZS 3604 8.7.3. Form all holes and edge notches in top and bottom plates in accordance with NZS 3604 8.7.5.

Studs

Studs shall be to the dimensions and spacings shown on the drawings, and installed true to line and plumb in both directions between top and bottom plates.

Unless noted otherwise, non-load bearing wall studs shall be to the spacings given in NZS 3604 Table 8.4, stud width as shown on the drawings.

Form all holes and edge notches in studs in accordance with NZS 3604 8.5.1.5. Do not notch, check, cut, or bore holes in the middle third of any trimming stud.

Should the need arise, studs shall be straightened in accordance with NZS 3604 8.5.3 with prior approval from the Architect/Designer only.

Unless noted otherwise, studs in loadbearing walls for 3 kPa floor loads shall be in accordance with NZS 3604 Table 14.10.

Lintels

Lintels shall be to the dimensions and locations shown on the drawings, and installed true to line and level, and shall be supported by a 45mm thick doubling stud or jack stud fixed to a trimming stud, and secured against uplift in accordance with NZS 3604 8.6.1.8 as required.

The thickness of a lintel may be made from two or more members, where each member is the length of the lintel, in accordance with NZS 3604 2.4.4.7.

Sill & Head Trimmers

Unless specified or shown otherwise, sill and head trimmers to openings shall be the same width as the wall stud and to the thickness given in NZS 3604 Table 8.15, and installed at the required opening height true to line and level, and supported by a 45mm thick doubling stud or jack stud fixed to a trimming stud.

Dwangs

Dwangs shall be the same width and thickness as the wall stud, and installed at the centres noted on the drawings, and accurately cut and fixed in place true to line and level and flush with stud edges. Dwangs fixed in accordance with NZS 3604 Table 8.19.

Ribbon Boards

Ribbon boards shall be as dimensioned and located on the drawings, and installed on edge and checked 25mm into studs at the required height, true to line and level, and fixed in place in accordance with NZS 3604 Table 8.19.

7.4.8 Roof Framing

Rafters

All rafters (including hip, valley and jack rafters) shall be to the dimensions, spacings, pitch, and layout shown on the drawings.

Rafters shall be aligned and paired at the required spacings to ridge boards, ridge beams, hip rafters and valley rafters, and as shown on the drawings, and installed parallel, true to line, pitch and plane, and fixed in accordance with NZS 3604 Table 10.1.

Any required jointing of rafters shall be made over supports shown on the drawings only.

Unless shown otherwise, rafter seating to top plates, beams, and lintels shall have a minimum bearing of 32mm without reducing the rafter depth to less than 65mm, or 80%, at the birds mouth.

Extend rafter ends to form eaves as detailed on the drawings and in accordance with NZS 3604 10.2.1.14.

Fly rafters and outriggers installed to form gable verges as detailed on the drawings and in accordance with NZS 10.2.1.15.3

Verandah Beams

Verandah beams shall be to the dimensions and locations shown on the drawing and installed true to line and level. Unless shown otherwise, all verandah beam jointing and connections to timber posts shall be in accordance with NZS 3604 Table 9.2.

Beams to be 'pocket' fixed within wall, with 20mm straps over. Use 2x type 14g screws to fixed to framing.

Purlins

Purlins shall be to the dimensions and spacings shown on the drawings and as required by the cladding material, and fixed to rafters and/or trusses in accordance with NZS 3604 Table 10.10 (purlins on their flat) and/or Table 10.11 (purlins on their edge).

Purlins on their flat shall be continuous over a minimum of two spans.

Provide all necessary blocking and lateral support to purlins laid on edge in accordance with NZS 3604 10.2.1.16.6, and as detailed.

Extend purlins to form gable verges as detailed and in accordance with NZS 3604 10.2.1.15.

Roof Trusses

Roof trusses shall be Specific Engineering Design (SED) in accordance with NZBC B1/VM1 and manufactured by an accredited fabricator, and shall comply with all aspects of NZS 3604 10.2.2. Roof trusses shall be fabricated to meet the specific design requirements of the roof including, but not limited to; roof layout, pitch, and details, in accordance with the drawings and specification.

Roof trusses shall be supported and fixed to the truss fabricator's specifications but shall be no less than that required by NZS 3604 Tables 10.14 and 10.15. Roof trusses shall be braced as shown on the drawings and in accordance with NZS 3604 10.3.

Roof Bracing

Roof bracing shall be as shown on the drawings and in accordance with NZS 3604 10.3 and 10.4 as necessary.

7.5 Plasterboard Sheet Linings

7.5.1 Scope

Supply, install and finish the selected Plasterboard Sheets as interior linings to the walls, ceilings, and other elements identified on the drawings, to the specified finish level, complete with accessories. All aspects of this work shall be in complete accordance with the Plasterboard Manufacturer's technical literature and installation guidelines, other relevant product manufacturers' recommendations, and as shown on the drawings.

7.5.2 Performance

To the areas noted as 'Bracing' on the drawings; additionally comply with all relevant aspects of the Plasterboard Manufacturer's installation requirements to the specified bracing unit rating, complete with all system accessories, and other relevant product manufacturers' recommendations.

7.5.3 Plasterboard

Standard Plasterboard, 10mm thick.

Location: All interior walls except wet areas
Manufacturer, brand name and type: Gib Standard Plasterboard

Standard Plasterboard, 13mm thick.

Location: All ceiling except wet areas.
Manufacturer, brand name and type: Gib Standard Plasterboard

Bracing Plasterboard, 10mm thick.

Location: Where shown on wall bracing layout
Manufacturer, brand name and type: Gib Bracing plasterboard

Water Resistant Plasterboard, 10mm thick, for wet areas.

Location: To all wet area walls
Manufacturer, brand name and type: Gib Aqualine Plasterboard

Water Resistant Plasterboard, 13mm thick, for wet areas.

Location: Wet area ceilings
Manufacturer, brand name and type: Gib Aqualine Plasterboard

7.5.4 Fixings

Fix sheets with adhesive and bugle-head drywall screws in accordance with the Plasterboard Manufacturer's requirements.

Plasterboard adhesive. Use to adhere the sheets and accessories to the framing in accordance with the Plasterboard manufacturer's requirements.

Substrate:
Adhesive manufacturer, brand name & type:

7.5.5 Plasterboard Finish Level

Level 4 Finish, in accordance with AS/NZS 2589. Unless specified otherwise, all decorated plasterboard shall be finished to Level 4 Finish.
All joints and interior angles shall have shall have jointing tape embedded in jointing compound and minimum of two separate coats of jointing compound applied over all joints, angles, fastener heads and accessories.
Jointing and finishing compounds shall be applied and finished evenly and free of ridges and tool marks in preparation for decoration in accordance with the manufacturer's requirements.
Agree in writing with the Decorator that a Level 4 Finish has been achieved when complete and before decorating commences.

Location: Throughout dwelling
Manufacturer, brand name and type:

7.5.6 Jointing Tape

Plasterboard sheet joints shall be reinforced with a suitable paper jointing tape compatible with the jointing and finishing compounds.

Manufacturer, brand name & type:

7.5.7 Co-operation

Co-operate with other trades to ensure that all preliminary and preparatory works are completed to specification and as shown on the drawings.
Co-ordinate with other trades to ensure that appropriate clearances are allowed from adjacent internal linings, fixtures, products, and associated services, etc, that the sheets correctly allow for door and window installation, and that services penetrations are correctly handled to maintain sheet integrity.
Co-operate with the Decorator to ensure that the specified plasterboard finish level has been achieved before decoration commences.

7.5.8 Workmanship

Plasterboard installation and finishing work shall be carried out by experienced tradesmen familiar with the techniques and materials specified and in accordance with the manufacturer's installation requirements.
Plasterboard linings shall be finished to the specified finish level in accordance with AS/NZS 2589.

Make all necessary arrangements for the quality assessment of plasterboard finishes prior to commencing decorating.
Protect surrounding surfaces from jointing compound splashes and sanding dust.

7.5.9 Delivery & Handling

Store plasterboard sheets undercover inside a watertight building and keep sheets dry at all times. Stack sheets flat on a dry level surface in accordance with the manufacturer's recommendations. Avoid damage to sheet edges, ends, and surfaces. Carry all sheets on edge. Do not use damaged or faulty sheets.
Handle and store plasterboard finishing materials and accessories in accordance with the manufacturer's requirements. Keep products dry and protect from damage. Do not use damaged or faulty products or products beyond their expiry date.

7.5.10 Preparation

Check that any timber framing elements are in accordance with NZS 3604, or in accordance with NZS 3603 and AS/NZS 1170 for specific design, and in accordance with the Plasterboard Manufacturer's requirements.
Check that the building has been completely finished to all penetrations including doors, windows, services, etc. so that the sheets can be installed without being affected by any weather conditions. Check junctions to all other building elements and ensure that all necessary works have been completed, eg; flooring, set-out of services, etc. that will enable the sheets and accessories to be installed.

Framing shall be plumb and in true alignment, complete and suitable for the sheets, with a maximum moisture content 18% or as recommended by the Plasterboard Manufacturer. Check that the framing is true to line and plane and with no projections due to structural and bracing bracketry etc. Ensure that framing brackets, plates, braces and hold-downs etc. are correctly installed.
Clear building debris and rubbish from framing voids and keep clean until plasterboard sheet linings are installed.

7.5.11 Installation

Install the sheets, complete with all accessories, to the framing in accordance with the Plasterboard Manufacturer's requirements, and as noted and detailed on the drawings.
Install all necessary metal beads and trim to corners and edges and control joints as required and as shown on the drawings.
Apply jointing and finishing compounds to the required build and specified finish level in accordance with the manufacturer's instructions. Reinforce joints with the selected jointing tape. Where required sand top coats smooth and even with fine sandpaper, as recommended by the manufacturer, when completely dry.

7.5.12 Completion

Ensure that the plasterboard sheets have been installed correctly and finished to the specified finish level. Check for damage and replace as necessary. Ensure that assessment of the plasterboard finish level has been carried out and that agreement that the finish level is acceptable for subsequent

decorating has been provided.
Clean up thoroughly on completion and remove all waste and rubbish from site.

7.6 Timber Weatherboard Cladding

7.6.1 Scope

Supply and install the selected Timber Weatherboard Cladding type(s) to the locations shown on the drawings, complete with all accessories. All aspects of this work shall be carried out to comply with the requirements of the New Zealand Building Code, relevant Standards, and in accordance with any specific manufacturer's requirements, other relevant product manufacturers' recommendations, and as noted and detailed on the drawings.

The following is a list and a general description of the extent of Timber Weatherboard Cladding work, which are more specifically defined in the contract documents, required for the completion of the contract works:

7.6.2 Horizontal Weatherboard Profile

Standard Bevel-back Weatherboard: ex.150mm x 25mm, machined to NZS 3617 and/or BRANZ Bulletin 411. Manufactured from the selected timber species to the finish specified.

Location:

7.6.3 Timber Species & Face Finish

Standard Bevel-back Weatherboard shall be run from H3.1 treated, finger-jointed dressing-grade Pinus Radiata. Durability shall be to NZS 3602 Table 2A and NZBC B2/AS1, and materials compatibility through all cladding elements shall comply with E2/AS1 tables 20, 21 and 22.
Handle the weatherboards carefully to avoid damage to edges and faces, store flat and keep packaged until required for installation, and check that the boards moisture content at installation is approx. 14% mid-summer through to 18% midwinter. Ensure that all cut edges and ends are fully primed prior to fixing.

7.6.4 Weatherboard Finish

Standard Bevel-back Weatherboards run from H3.1 treated Pinus Radiata shall be pre-primed to AS/NZS 2311 with a factory-applied oil based primer to all four sides.

7.6.5 Preparation

Co-operate with other trades to ensure that all preliminary and preparatory works are completed to specification and as shown on the drawings.
Co-ordinate with other trades to ensure that the weatherboards correctly allow for door and window installation, and for the locations of pipes, outlets, and fittings installed by others.

Horizontal Weatherboards Direct-Fixed to Timber Framing - check all aspects of preparatory works, including, but not limited to:
- Check that timber wall framing complies with the approved design drawings, is plumb and in true alignment, has studs at maximum 600mm centres and nogs/dwangs at maximum 800mm centres for

horizontal cladding, that any additional framing required for fixing at corners, openings and soffits is correctly in place, and has a maximum moisture content of 20% at the time of weatherboard cladding installation.

- Check that the flexible wall underlay, as specified, has been installed in accordance with the manufacturer's recommendations and NZBC requirements, with all finishing tapes, flashings, etc., at windows, doors, corners and penetrations are all correctly incorporated to give a continuous seal, and that all preparatory materials are lapped such that any water will run down to the exterior.
- Check junctions to all other building elements and cladding systems and ensure that all necessary works have been completed that will enable the weatherboards to be installed, and that the work of other trades does not negatively impact on or reduce the minimum clearances required by the NZ Building Code between the cladding and ground, roof and/or deck junctures.

7.6.6 Fixing

Fix pre-primed Pinus Radiata Standard Bevel-back Weatherboards with hot-dipped galvanised jolt head nails, length to embed minimum 35mm into the framing, holes pre-drilled 1mm less than the nail gauge where liable to splitting, and the nail at a slight upward slope into the framing.
Install the weatherboards with one nail positioned 10mm above the top of the lower board at each stud. Punch nails 3mm below the board surface, prime nail holes and fill prior to sand and finishing.
All soakers and flashings hot-dipped galvanised steel.

7.6.7 Flashings

Flashing materials shall be in accordance with the requirements of NZBC E2/AS1 Sections 2.2 Materials, 4.0 Flashings, Table 20 - Material Selection, Table 21 - Compatibility of Materials in Contact, and Table 22 - Compatibility of Materials Subject to run-off, and as noted on the drawings.
All flashings around windows, doors and other openings and apertures, at internal and external corners, inter-storey junctions, soffit junctions, and at junctions with other building elements and cladding systems, etc., shall all be carefully constructed, fixed and finished to the details shown on the drawings.

7.6.8 Installation

Bevel-back Weatherboard - Direct Fix

Back flash all internal and external corners as detailed.
Carefully set-out Standard Bevel-back Weatherboard cladding horizontally over the underlay and fix the base weatherboard to the framing, level and true to line along the base line, 50mm minimum or as detailed, below the bottom plate or floor structure. From the base board upwards, install the weatherboards over the underlay and fix to the framing, keeping cladding lines consistent, level and true along walls and around corners.
Install full length weatherboards where possible. Where joints are unavoidable, scarf the weatherboards at 45º and fix to solid framing through the overlapping board just clear of scarf join - stagger weatherboard joints to avoid clustering. Where boards are coated, ensure all cut ends and fresh timber is double coated with a suitable sealer/primer.
Finish Standard Bevel-back Weatherboards, weatherboard trim, flashings and accessories at internal and external corners, window and door openings, parapets, and at junctions with other building elements and cladding systems exactly to the details shown on the drawings.

7.7 Workmanship & Materials

7.7.1 Workmanship

Supervision

Where required by the NZ Building Act 2004 it is the building contractor's responsibility to ensure that all restricted building work is carried out by a Licensed Building Practitioner. It is the main contractor's responsibility to ensure that the construction of all structural timber complies in all respects with the drawings and the specification.

All non-restricted building work shall be carried out by or under the direct supervision of competent tradespersons, suitably qualified for the work undertaken, and in accordance with the best and latest trade practice.

Timberwork

All timber shall be worked and cut to be true and square and free from wind and warp with all joints matching and mating to a proper contact fit over the full surface of the joint. All connections whether nailed screwed, glued, mortised or dovetailed shall be accurately made and properly executed to provide sound satisfactory connections for the class of work required.

Timber containing unacceptable defect or distortion shall not be cramped to provide mating at connections but shall be discarded and replaced by true defect-free timber before connections are made. Distribute any acceptable defects in timber so as not to impair the strength or the appearance of the finished work. Do not cut studs across the grain to straighten them.

The checking and cutting away of timbers shall be avoided where possible and shall be limited to such dimensions as will not prejudice the purpose for which the timber is used. Observe NZS 3604 restrictions on holing and checking of timber joists and beams. Concealed services pipes and wiring shall not project beyond the framing face and where possible shall be beyond the linings/claddings fixings reach.

Neatly punch exposed nailing to the diameter of the nail head below the surface. Completley remove bruises and tool marks, and replace all split timbers and hammer-marked finishing timbers.

Fit a 3-ply bituminous DPC or a single layer high impact polyethylene DPC at all timber to concrete junctions to provide complete separation. Ensure that the DPC material is compatible with the timber treatment.

Clean out framing voids before fixing sheathings or linings. Ensure framing voids are fully vermin proofed to the exterior. Build in as necessary all required flashings (supplied by others) to windows, doors, roof edges, etc.

Window Installation

Prepare window and external door framing openings for joinery installation by neatly cutting the building wrap at 45º into corners, returning turning the wrap through the frame depth and fixing to the inside face.

Over-flash the underlay along the sill with a flexible flashing tape, installed full frame depth and length of the opening, returned minimum 100mm up the jambs, and with minimum 50mm return over the outside edge.
Over-flash the underlay at head/lintel corners with a flexible flashing tape, extending minimum 100mm each way from the corner, full frame depth, and with minimum 50mm return over the outside face.

Install external joinery frames with metal flashings as detailed and/or as required to completely weatherproof all frame-to-cladding junctions.
Unless shown otherwise, head flashings shall be carried minimum 75mm up behind claddings, extended at 15º out over the joinery head or facing board and returned down to cover the joinery or facing board minimum 10mm and finished with a 5mm, 45º 'kick out' drip-edge.
Neatly dress down the head flashings at the ends of the facings - for drained cavity construction, also form up-turned stop-ends in-line with the outside edge of cavity above.
Install metal (as specified) head flashings, fixed over the wall underlay, with the flashing upstand over-flashed minimum 50mm with a flexible flashing tape against the underlay, or with an additional piece of underlay extended over and lapped behind the underlay above, behind the inter-storey flashing or sill flashing above, or to the underside of the eaves.
Unless shown otherwise, sill flashings, where required, shall have a minimum 5º slope, minimum 8mm rear upstand with sealed sloping stop-ends, and be carried down minimum 35mm over the lower cladding and finished with a 5mm, 45º 'kick out' drip-edge.

Take delivery of window and door joinery. Check substrates for correct profile and alignment and that the joinery is fabricated to the correct wall construction set-out and depth. Set shims or pack as necessary to install joinery exactly true and square. Use appropriate separators between aluminium and other materials, and fix securely with due regard for any anticipated movements and for linings, trim, etc.

Install neat sealant beads as detailed or required.

After joinery installation, install closed cell backing rods as required and expanding foam seal the gap between the opening substrate and joinery liners/reveals (all round, from the inside).

On completion ensure that all sashes and doors neatly fit the openings with regular tolerances to all edges, and that all moving components and hardware are correctly adjusted and operating smoothly, without binding, to the required functionality.

Joinery Installation
Take delivery of all scheduled joinery items (doors, cabinets, shelves, etc.) and install in the positions shown, accurately aligned, true to level, plumb and square, and securely fastened as noted and in accordance with best trade practice and with due regard for adjacent linings, finishes and trim, and anticipated movements.

Cabinets scribed and/or recessed packers scribed to adjacent surfaces as detailed or directed. Protect all installed Joinery from damage including surface marking and contamination, dirt and dust, and

moisture until completion. Do not use Joinery items for working supports or platforms or for storage of materials or tools and equipments.

On completion ensure that joinery item doors and drawers all neatly fit the openings with regular tolerances to all edges, and that all moving components and hardware are correctly adjusted and operating to the required functionality.

7.7.2 Timber

Timber Materials

All timber shall be graded in accordance with NZS 3631 - Structural Grade MSG8 or better for all framing timber - (to meet the requirements of Table 2.3 of NZS 3603 for mechanically graded timber), and Dressing Grade for all finishing timber. Timber that is deemed below standard, in the opinion of the Architect/Designer, shall be removed from the site.

All non-durable timber, including components in manufactured items, shall be appropriately treated against moisture and/or insect decay by treatment plants with recognised quality assurance systems that are administered by the Timber Preservation Council (NZTPC). Treatment of timber and wood-based building products shall be to the requirements of NZS 3602 as an absolute minimum, and all treated timber shall be identified and marked as required.
Ensure that similar timbers with different treatment levels are carefully managed during construction to avoid accidental use of an H1 treated item where H3 hazard class treatment is required by the NZS 3602.
Do not use LOSP (light organic solvent-based preservative) treated timber that has not adequately 'flashed-off'.
Ensure that all cut or drilled surfaces of H4 and H5 hazard class treated timbers are flood coat re-treated, with the product recommended by the original treatment plant, before installation.

All timber shall be seasoned or kiln dried, to the stable moisture content, be straight and true and free from wind, warp and distortion, and in lengths suitable for the members required and the location in the finished construction. All framing timber shall have a moisture content between 12% and 18 % before being installed. If the use of inadequately seasoned timber results in damage or opening joints in the finished building the timber shall be replaced. Fixing of internal linings shall be delayed after closing in until the timber framing has dried back below 20% moisture content and to allow for the maximum settling of substrates.

All kiln dried, dressed and/or finishing timbers shall be stacked under cover on delivery to the site, and all timber shall be full to the nominal sizes shown or specified, subject only to normal cutting and dressing tolerances.
All finishing timber shall have machine marks, stains and roughness removed and shall be sanded smooth.

Ensure that enclosed surfaces and ends of paint-finished exterior finishing timbers are fully primed before fixing. If this trade (Carpentry) carries out the priming it shall be to the specification and standard required of the Painter.

Unless specified otherwise, exposed framing timbers shall be unfinished to the exterior, and be fine bandsawn milled, treated with a minimum of discolouration, handled carefully at all times to avoid surface damage, and delivered free of crayon or pencil or other markings. Hazard class treatment markings shall be on the ends, NOT on the faces.

Timber Species

Unless noted or specified on the drawings, in the list below, or elsewhere in this specification all timber used shall be Radiata pine.

Other timbers shall be as follows:

- Douglas Fir (*NZ Oregon, Psuedotsuga menziesii*)
- Jarrah Clears (*Eucalyptus marginata*)
- Kwila Clears (*Merbau*)
- Balau (*Shorea spp*)
- Kwila (*Merbau*)
- Cedar Clears (*Western Red Cedar, Thuja plicata*)
- Rimu - (*NZ Red Pine*)
- Vitex Clears - (*Vitex cofassus*)
- Eucalypt Saligna Clears - *(Sydney Blue Gum*)
- Tasmanian Oak - (*Eucalyptus delegatensis / obliqua / regnans*)

Note: the use of alternate grades and varieties to those specified is subject to approval in each instance.

Other Materials

Materials shall be delivered to site with the packaging and labelling intact, shall be of the same type, finish or colour to maintain continuity, shall be stored, and conditioned if required, in accordance with manufacturer's recommendations, and shall be protected from damage, contamination, and moisture - as appropriate.

Handle all materials in accordance with best practice and the manufacturer's requirements, and in a manner that prevents damage or deterioration to the material. Do not use damaged or defective materials or products, or products that are beyond their designated shelf life.

7.7.3 Laminated Veneer Lumber

Laminated Veneer Lumber (LVL) shall comply with AS/NZS 4357.0. Each piece of structural LVL shall be branded at least once with the manufacturer's logo and a registered brand or marking that clearly identifies the structural properties that apply to the product and its limitations on end use; all in conjunction with associated published literature.

Structural properties identified in the associated published literature shall be:

- details of marking specific to the product
- veneer details
- physical properties including
  - modulus of elasticity
  - bending stress
  - tension stress parallel to grain
  - compression stress perpendicular to grain

- compression stress parallel to grain
- shear stress

- joint group
- density
- dimensional tolerances
- adhesives used
- limitations on end use

The storage and handling of LVL shall comply with Appendix A of AS/NZS 4357.0. In particular:
- LVL should be kept dry during storage and transit
- LVL should be stacked on bearers well clear of the ground and arranged so that their supporting surfaces are in the one plane
- Bearers should be spaced sufficiently close so that LVL spanning between them does not deflect excessively under its own weight.
- Bearers or spacers within a stack should be located near direct vertical alignment
- Care should be taken in lifting and handling LVL in order to avoid mechanical damage
- Wrapping should avoid and prevent entrapment of moisture
- LVL should not be used in high humidity conditions or exposed to the weather.

7.7.4 Proprietary Sheet Bracing Systems

Proprietary sheet bracing systems to walls, ceilings and sub-floor foundations shall be installed in strict accordance with the manufacturer's technical literature and design guides. No materials specified in the manufacturer's technical literature and design guide can be substituted without the written approval from the Architect/Designer.

7.7.5 Proprietary Roof Trusses

Roof trusses shall be of proprietary design, complying with the requirements of NZS 3603, NZS 3604, and AS/NZS 1170, and manufactured by suitably qualified fabricators.

Make allowance for all notching and holing to timber members to accommodate roof bracing etc., in the design of member sections of the roof trusses. Allow for all additional rafters, purlins, fixings and bracing necessary to complete the roof framing system with all accessories and incidental items necessary for proper installation even where not specifically shown on the drawings.
Proprietary roof trusses shall be designed to carry all imposed gravity and lateral loads. Refer to the approved design drawings for truss set-out and specified design loads. Roof trusses are assumed to be generally at 900mm centres spanning clear between walls or roof beams as shown on the drawings. The Main Contractor is responsible for the design of proprietary roof trusses, including their layout and interaction with and dependence on adjoining elements.

Provide all necessary design information and shop drawings for all proprietary roof trusses to be incorporated in the works for review prior to fabrication.
Provide Producer Statements from a Charted Professional Engineer covering the design and construction of the roof trusses. Provide all information required by the Territorial Authority for the purpose of obtaining a Building Consent.

7.7.6 Flooring

Particleboard Flooring

20mm high density temporary weatherproofed flooring grade particleboard, installed in accordance with the manufacturer's requirements to the locations shown on the drawings.

Use sheets as large as possible, and set out sheets to approval. Accurately cut sheets to size, with the edges shot as necessary to provide tight butt joins. All handling, observation of requirements to accommodate moisture movement, expansion gaps and off-sets from fixed elements, fixings and adhesives and other aspects of this work shall all be exactly in accordance with the manufacturer's recommendations.

Punch nail fastenings and lightly sand particleboard flooring to an even finish over the entire surface before laying floor coverings or clear finishing, taking care to avoid damage to finished adjacent work - do not over-sand flooring.

7.7.7 Fixings

Nails

Comply with the requirements of NZS 3604 Section 2.4.4 and the Nailing Schedules of NZS 3604 as applicable. Unless noted or specified on the drawings or elsewhere in this specification, all nails fixing exterior timbers shall be Grade 304 or 316 stainless steel. Nails that will be covered with plaster or any similar material shall be hot-dipped galvanised, unless noted or specified otherwise.

Finishing brads to all finishing timbers shall be set out neatly and punched to the diameter of the nail below the surface. Bore slightly undersize holes for nailing that could cause splitting of the timber. Power-driven staples are completely unacceptable in finishing timbers.

Screws

Screw fastenings shall be of suitable gauge, head type, thread design, and length to provide secure fastening into the substrate material, and be suitable for the assembly/construction of the fixed item/element and the substrate material.

Unless noted or specified otherwise, screws exposed to the exterior shall be Grade 304/316 stainless steel or hot-dipped galvanised, and hot-dipped galvanised or similar corrosion resistant for damp situations.

Self-drilling screws shall be in accordance with AS 3566 for fastener type and corrosion resistance class.

Unless noted or specified otherwise, screws fixing hardware or similar shall be of the same material and finish as the hardware. Except where raised head screws are shown or specified, screws shall be countersunk flush or recessed where stopped/filled.

Bolts

Where bolts are used they shall be complete with nuts and washers unless specified otherwise. All bolts, nuts and washers are to be hot-dipped galvanised finish unless noted otherwise. The diameter of a hole for a bolt shall not be less than the bolt diameter nor exceed it by 1.5mm.

For the following bolt diameters use washer sizes as below unless noted otherwise on the drawings:

up to M8 - 25x 25 x 1.5mm

up to M12 - 50 x 50 x 3mm

up to M20 - 65 x 65 x 5mm
up to M20 - 75 x 75 x 6mm

Round washers may be used proving they are of a thickness and area not less than those specified above.

Subfloor framing - unless noted otherwise on the drawings, cast-in holding down bolts for subfloor framing fixed to concrete foundation walls shall be M12 Grade 304 stainless steel, embedded minimum 150mm into concrete, to the spacings required by NZS 3604, and located centrally on the timber.
Bottom plates - unless noted otherwise on the drawings, cast-in holding down bolts for bottom plates fixed to a concrete slab shall be M12 galvanised, embedded minimum 120mm into concrete, to the spacings required by NZS 3604, and located centrally on the timber.
Framing - timber/timber and timber/steel - Unless noted otherwise on the drawings, M16, hot-dipped galvanised, hexagonal head mild steel and with 50 x 50 x 3mm washers.
Timber/concrete (dry situations) - Unless noted otherwise on the drawings, Ramset Trubolts, T12140 at maximum 900mm centres - for damp or exterior situations use stainless steel Trubolts.
Bolts shall be tightened until the washer just indents the timber surface. Exposed bolts shall be re-tightened just prior to Practical Completion to remove any slack consequent on timber shrinkage.
Allow to countersink bolt heads and nuts as necessary to clear linings.

Framing Hardware
Proprietary timber framing hardware and fixings, including multigrips, joist shoes, Z nails, gang nails and similar hardware, may be used where specifically approved, or where required on the drawings or by NZS 3604 schedules, in accordance with the manufacturer's requirements.
Proprietary timber framing structural brackets and ties, including post and bearer brackets, beam supports, angle brackets, tie cleats and similar hardware, shall be as noted on the drawings and installed in accordance with the manufacturer's requirements.
Refer to Metalwork or Structural Steel section of this specification for specific design engineered fabricated steel components that connect structural timber framing.

Powder Fastening Systems
Powder powered fasteners are not permitted for fastening structural timber framing unless specifically noted on the drawings. All applications are subject to specific approval.

Adhesives
Aliphatic PVA for dry timber applications - all other adhesives for timber jointing are subject to specific approval or as specified. Check surfaces are in appropriate condition to receive adhesive, and that adhesives are used strictly in accordance with the manufacturer's instructions. Clamp adhesive-jointed timber connections and check alignment of members before the adhesive has set.

7.7.8 Flashings

Flashing materials shall be in accordance with the requirements of NZBC E2/AS1 Sections 2.2 Materials, 4.0 Flashings, Table 20 - Material Selection, Table 21 - Compatibility of Materials in Contact, and Table 22 - Compatibility of Materials Subject to run-off, and as noted on the drawings.
All flashings around windows, doors and other openings and apertures, at internal and external

corners, inter-storey junctions, soffit junctions, and at junctions with other building elements and cladding systems, etc., shall all be carefully constructed, fixed and finished to the details shown on the drawings.

7.7.9 Sealants

Sealants

For critical joints such as primary water/weatherproofing seals, precast panels primary seals, structural floor slab control joints, structural glazing, immersion or hydrostatic pressure seals, etc., either use the sealant noted on the drawings or obtain a reputable sealant manufacturer's recommendation for the precise situation, and submit the manufacturer's specifications covering all relevant criteria and characteristics of the proposed sealant, primers, joint surfaces preparation, etc. to the Architect/Designer for review and confirmation to proceed.

If so requested, additionally submit a sample of the proposed sealant made up into a demonstration joint, incorporating the same materials, preparation, finish tooling, etc. After confirmation to proceed with the proposed sealant install a sample joint to approval, length approximately 2% of the overall length of the joints required, with a minimum length of two metres; when accepted this joint becomes the quality control sample for all subsequent similar joints.

For less critical joints such as those in covered or protected situations, and bathroom and kitchen ceramics and sanitaryware etc., either use the sealant noted on the drawings or select the sealant from a reputable manufacturer's range for the substrate materials involved, with due regard for the flexibility required, acid or neutral curing, mould resistance, paintability or clear or standard colours, slumping characteristics, temperature range expected, etc. - silicone, polymer or polyurethane sealants are anticipated.

For all simple gap-filling and draught sealing situations, either use the sealant noted on the drawings or select from a reputable manufacturer's range for a paintable acrylic sealant with good adhesion characteristics for the substrates involved - pay particularly care in the sealant selection where bare metal, polycarbonate, polystyrene or similar substrates or where bituminous-based membranes are adjacent or where exposure to solvents is possible.

All joint surfaces preparation and priming and all sealant application work shall be exactly in accordance with the sealant manufacturer's recommendations, and carried out by competent and experienced applicators familiar with the materials and techniques required.

Ensure that the sealant is being used within the manufacturer's stated design parameters, particularly with regard joint design and anticipated cyclic movement.

Check that the joint faces are sound, completely dry, and frost free, clean and free of dirt, rust, oil, grease, laitance, etc., and they are primed to suit the surface porosity - particularly for critical locations.

Insert a polyethylene tape slip layer at the back of the joint or a closed cell polyethylene PEF backer rod where required and to the sealant manufacturer's recommendations. Mask off joint edges where a clean straight finish line is required.

Check the toxicity of the selected sealant and handle it appropriately. Check that the temperature during sealant installation is within the manufacturer's guidelines.

Apply the sealant and tool the filled joint's surface smooth and even, utilising a lubricant as necessary and strictly within the manufacturer's guidelines.

Remove any masking tape immediately after tooling, clean up all adjacent surfaces using the recommended cleaning agents as required, and protect the finished joint until the sealant has properly cured.

7.7.10 Exterior Finishing Trim

Fascias and barges ex.150x40mm, painted radiata. All exterior trim handled as for interior trim.

7.7.11 Interior Finishing Trim

All interior finishing trim shall be cut to the exact dimensions and fine sanded smooth, and with lightly sanded arrisses, and all fixed with plated finishing pins. Machine staple fixing is NOT acceptable. Note that even traces of planer marks are unacceptable on architraves. Margins between interior trim and other elements shall be exactly even, and all mitres shall be exact and tight.

Scotias 40 x 18mm bevelled Customwood.

Architraves 60mm x 18mm, finger jointed finishing Radiata, square profile, sand arrissed to wet areas, 65mm x 18mm square profile MDF elsewhere.

Skirtings 135mm x 18mm, square dressed, high moisture resistance MDF.

7.7.12 Hardware

Finishing Hardware Prime Cost
Allow the Prime Cost Sum allowance of $ . . . for the supply only of selected timber door, cabinet and wet-area (towel hooks, robe hooks, toilet roll holders, etc.) finishing hardware.
Note that this sum does not cover hinges or other opening hardware as specified or noted, and does not cover any hardware for aluminium doors and windows.

7.8 Residential Garage Doors

7.8.1 Scope

Supply, install and commission residential garage doors, as specified herein, to the locations identified on the drawings and schedules, complete with all accessories for proper installation and functionality. All aspects of this work shall be in complete accordance with the manufacturer's technical literature and installation guidelines, other relevant product manufacturers' recommendations, and as shown on the drawings.

7.8.2 Requirements

Wind Performance
All residential garage doors shall comply with the wind performance requirements of AS/NZS 4505 according to the applicable NZS 3604 Wind Zone. Residential garage door components shall be designed, constructed and installed to resist pressures corresponding to the ultimate wind pressure rating.

Sample
Provide samples of the specified door facing materials, upon request, for the approval of the Architect/Designer. Manufacture should not commence until approval has been gained.

7.8.3 Sectional Garage Doors

Insulated Sectional Overhead Door
Insulated Sectional Overhead Garage Door - as specified herein and/or door schedule. The door shall be made of two or more insulated horizontal sections hinged together so as to provide a door large enough to close the entire opening, which is guided in vertical and horizontal tracks by rollers situated at the ends of each panel. Classified according to AS/NZS 4505: Table 5.1; and according to the ultimate wind pressure rating given in AS/NZS 4505: Table 5.3.

General Specification:
- Construction & Performance Criteria: In accordance with the requirements and limitations of AS/NZS 4505.
- Door Panel Material: Refer to Material, Finish & Colour clause.
- Panel Insulation: Expanded polystyrene (EPS) panels.
- Door Guides: 2-piece roll-formed track guides; nylon wheels with ball bearings.
- Hinges: Full sized hinges spanning the panel length.
- Weather Seal: Neoprene base weather strip, attached to the bottom closing surface of the door.
- Mounting: Face mounted - fixed to the interior face of the wall opening.
- Opening Operation: Refer to Door Opening Operation clause.
- Durability Requirements: Not less than 15 years in accordance with NZBC B2/AS1.

Manufactured and installed in accordance with AS/NZS 4505 and the manufacturer's requirements, to the locations and details shown on the drawings, complete with all necessary components and accessories required for proper installation, performance and functionality. Refer to the approved Door Schedule and drawings.

Manufacturer & Model:
Minimum Headroom Clearance:
Minimum Sideroom Clearance:
Scheduled Door Numbers:

7.8.4 Door Material & Finish

Powder Coated Steel - Insulated Sectional Overhead Door
Insulated Sectional Overhead Garage Door panels shall be manufactured from powder coated hot-dipped zinc-coated steel coil conforming with AS 1397. Panel colour and surface texture (smooth or woodgrain) as specified below.

Panel Colour:
Surface Texture:

7.8.5 Door Opening Operation

Automatic Door Opener - Insulated Sectional Overhead Door
Insulated Sectional Overhead Garage Door - Automatic Door Opener - as specified below. The insulated sectional overhead garage doors scheduled below shall be operated by the automatic door opener as recommended by the garage door manufacturer - to suit the door size, loads, and application. Installed as a component of the insulated sectional garage door(s), complete with accessories, and commissioned to the required operating functionality.

Opener Brand & Model:
Maximum Door Size:
Maximum Door Area (m^2):
Maximum Lifting Force (kg):
Input Voltage:
Scheduled Door Numbers:

7.8.6 Co-operation

Co-operate with other trades to ensure that all preliminary and preparatory works are completed to specification and as shown on the drawings.

Coordinate with other trades to establish exact sizes for garage doors, to install garage doors and accessories to the required installation details and tolerances, and door operation. Confirm garage door opening site-measurements, fixing types, and other necessary information prior to manufacture.

7.8.7 Workmanship

Where required by the NZ Building Amendment Act 2012 it is the building contractor's responsibility to ensure that all restricted building work is carried out by a Licensed Building Practitioner.

All installation and commissioning of residential garage doors shall be carried out by experienced and competent installers, familiar with the selected products and installation techniques, to fully comply with all warranty requirements and in accordance with the manufacturer's requirements.

All work shall be such as to leave a neat, efficient, robust and fully operable installation.

Electrical wiring (by others) shall be carried out by a qualified Electrician in accordance with the Electrical Standards and Regulations. The Electrician shall provide the power supply; the Door Installer shall commission and verify the operation of the door.

Leave installed garage doors clean and free from damage and defects, and operating to the required functionality.

Issue to the Owner a copy of the manufacturer's maintenance requirements, and a copy of the manufacturer's product and installation warranty when commissioning is complete.

7.8.8 Delivery & Handling

All surfaces, including and glass, shall be appropriately protected from marking and damage during manufacture, delivery and installation.

Inspect components and accessories upon delivery to site and reject any damaged or defective items. Contact the manufacturer for replacement of rejected items at time of delivery to site. Do not use or use or install damaged or defective components or accessories.

Store components and accessories undercover, off the floor, on a flat, even and level surface as recommended by the manufacturer and in a manner that prevents any distortion and damage. Keep stored garage doors and accessories dry and protected from damage, moisture and contamination at all times.

Handle components and accessories in accordance with the manufacturer's requirements and in a manner that prevents distortion to joinery frames and any damage - including surface marking.

Installers shall be familiar with and comply with the manufacturer's safe handling requirements and precautions for use, and shall use appropriate safety gear and equipment during all stages of manufacture and installation.

Installers shall conform with all relevant WorkSafe NZ Guidelines and Codes of Practice - including the OSH Guidelines For the Provision of Facilities and General Safety in the Construction Industry.

7.8.9 Preparation

Prior to installation, carry out all necessary inspections and preparatory work required, and ensure that all preliminary works by other trades has been completed to specification and as shown on the drawings.

Do not commence installation until all necessary preliminary works by others is complete and to the required standard. The commencement of work shall be deemed to indicate full acceptance by the installer that all preliminary works by other trades is complete.

Supporting timber framed structures shall comply with NZS 3604, or with NZS 3603 and AS/NZS 1170 for specific design, and have a maximum moisture content in accordance with the requirements of NZS 3602 at the time of installation.

Supporting light steel framed structures shall comply with the requirements of AS/NZS 4600 or the NASH Standard for Residential and Low-rise Steel Framing, Part 1: Design Criteria. Comply with the light structural steel framing fabricator's specifications and requirements for fixing cladding and roofing components.

Supporting concrete structures shall be within the scope of NZBC E2/AS3, and comply with NZS 3109. New concrete must have aged for a minimum of 28 days prior to installation.

Supporting concrete masonry structures within the scope of NZBC E2/AS3, and shall comply with NZS 4229, or with NZS 4230 and AS/NZS 1170 for specific design, and NZS 4210.

Supporting heavy steel structures shall comply with NZS 3404.

Check all aspects of preparatory works, including but not limited to:
- Check that garage door openings are correctly sized for fitting tolerances, are square and correctly aligned, with all sides plumb, level and true to line and plane.
- Check threshold rebates are correctly size and formed to suit the door operation.
- Check door installation clearances for headroom, sideroom and backspace.

7.8.10 Installation

Install and commission garage doors to the required operation and functionality in accordance with the manufacturer's installation requirements and as indicated on the drawings and door schedule, complete with sliding carriage assemblies, operating controls and other accessories necessary for proper operation.

Installation tolerances shall not exceed the manufacturer's recommendations. Garage door carriage tracks and guides shall be accurately aligned and fixed plumb and parallel, and the door head true to level.

Fastener and fixing types and spacings shall be appropriate for the door size and operation, with allowance for imposed wind loads, in accordance with the manufacturer's design and installation requirements. Except where specified otherwise on the drawings, fixings shall be hot-dip galvanised.

7.8.11 Completion

Check that the garage doors have been installed correctly, and that all moving and locking assemblies and components, and operating controls have been commissioned to the required functionality and tolerances. Check that all mechanical and electronic hardware is in full working order.

Check installed garage doors for damage, defects, faults and weathertightness - carry out repairs and/or replace elements as necessary in accordance with the manufacturer's instructions and to the required standard.

Leave this work complete and in full working order, to the required operating performance and functionality, in accordance with the manufacturer's warranty requirements. Leave all locking keys with the Contractor.

Leave the surrounding work area clean and free of rubbish. Remove rubbish and waste material from the site.

Issue to the Owner a copy of the manufacturer's maintenance requirements and a copy of the manufacturer's product and installation warranty for the completed work.

7.9 GIB® Rondo® Metal Batten Systems

7.9.1 Scope

Supply and install the specified GIB® Rondo® Metal Batten Systems to the locations identified on the drawings, incorporating all system components and accessories required for proper installation and performance. All aspects of this work shall be in complete accordance with the GIB® Rondo® Metal Batten Systems - System and Installation Manual and GIB® Site Guide publications (check www.gib.co.nz, or call 0800 100 442 for the latest editions), other relevant product manufacturers' recommendations, and as shown on the drawings.

No substitutions are permitted for GIB® Rondo® Metal Batten Systems.

This specification section should be read in conjunction with the GIB® Plasterboard Linings specification and relevant GIB® Systems specifications, and other specification sections, as they are interrelated.

For the purpose of this specification, the GIB® Rondo® Metal Batten Systems - System and Installation Manual publication is referred to as the GIB® Rondo® Metal Batten Systems Manual.

7.9.2 Requirements

Safety

Comply with the Health and Safety at Work Act 2015 (HSWA), and with all relevant Health and Safety at Work Regulations 2016, and with all relevant WorkSafe New Zealand (WorkSafe) Approved Codes of Practice and WorkSafe Information and Guidance, particularly those for construction and building maintenance.

Warranty

GIB® Product & System Warranty:

- 10 Years Warranty - for all GIB® Products and Systems installed, according to warranty conditions.
- Provide the GIB® Product & System Warranty on the manufacturer's standard warranty form.
- Commence the warranty from the date of practical completion of the contract works.

Producer Statement PS1 - GIB® Rondo® 308 Ceiling Suspension System

Producer Statement PS1 - GIB® Rondo® 308 Ceiling Suspension System. Furnish a fully completed Producer Statement PS1 (Design) as confirmation that the GIB® Rondo® 308 Ceiling Suspension System as designed and documented complies with the relevant clauses of the New Zealand Building Code. The PS1 Producer Statement shall not serve as a product warranty or guarantee of compliance.

7.9.3 GIB® Rondo® Metal Batten Systems

GIB® Rondo® 310 Ceiling Batten System

GIB® Rondo® 310 Ceiling Batten System. Incorporating 35mm deep, concealed metal ceiling battens that are either fastened with proprietary metal support clips (recommended) to the support frame or fixed directly to the support frame.

Suitable for 10mm,13mm,16mm and 19mm thick GIB® plasterboard ceiling linings for residential and commercial applications. Plasterboard ceiling linings are generally screw-fixed directly to the underside of the ceiling battens. Maximum 130mm clearance from the underside of the support frame (joist/rafter) to the top of the ceiling batten.

GIB® Rondo® System Components:
- 310 Batten: 35mm deep, galvanised steel furring channel (batten).
- 340 Perimeter Channel: 35mm deep, galvanised steel perimeter 'U' channel.
- NZ18 Perimeter Angle: 32 x 32mm, galvanised steel perimeter angle.
- 311 Clip: 92mm long, galvanised steel batten fastening clip. Provides 30mm max. clearance from supporting joist or truss.
- 313 Clip: 192mm long, galvanised steel batten fastening clip. Provides 130mm max. clearance from supporting joist or truss.
- A311 GIB Quiet Clip®: 92mm high, galvanised steel batten fastening clip with rubber cushioning grommets.
- 312 Jointer: Galvanised steel batten jointing clip.

GIB® Rondo® 311 or 313 clips can be installed to provide additional restraint and accurate batten alignment when the battens are direct-fixed to the support frame. Use GIB Quiet Clip® for GIB® Noise Control Systems.

When installed as a ceiling diaphragm, the battens must be fixed directly to the support framing. If GIB® Rondo® clips are used, then a timber block (min 300mm) or a continuous timber member must be fixed alongside the support framing to create a direct connection.

Installed with all system components and accessories required for proper installation and performance, in accordance with the GIB® Rondo® Metal Batten Systems Manual, to the locations, layout, levels and details shown on the drawings.

Where electrical earthing of GIB® Rondo® 310 Ceiling Batten System is required, the electrical earthing shall be carried out by a qualified electrician in accordance with the electrical standards and regulations.

Installed Location:

7.9.4 Co-operation

Co-operate with other trades to ensure that all preliminary and preparatory works are completed to specification and as shown on the drawings.

Coordinate with other trades to ensure that the GIB® Rondo® Metal Batten System correctly allows for ceiling lining installation, and for the locations of recessed lights and other fittings installed by others, and to install GIB® Rondo® Metal Batten Systems as required.

7.9.5 Workmanship

Where required by the NZ Building Act 2004, it is the building contractor's responsibility to ensure that all restricted building work is carried out by a Licensed Building Practitioner.

Installation of GIB® Rondo® Metal Batten Systems shall be carried out by experienced and competent tradespersons, who are familiar with the specified systems and installation techniques, in accordance with the GIB® Rondo® Metal Batten Systems - System and Installation Manual, to fully comply with all warranty requirements, and relevant requirements of AS/NZS 2785 (suspended systems). Submit evidence of experience on request, e.g. National Certificate of Interior Systems, or Certified Business Member of AWCINZ.

All cutting, jointing, fixing and supporting techniques shall be exactly as recommended by the manufacturer. All work shall be such as to leave a neat, efficient and robust installation, to the required standard, free from damage and defects.

7.9.6 Delivery & Handling

Store all materials and accessories indoors, off the floor, on a flat, level surface in accordance with the manufacturer's requirements. Keep materials and accessories dry and protected from damage, distortion, moisture and contamination at all times.

Do not use damaged or defective materials and products.

Handle all materials in accordance with the manufacturer's requirements and Product Data Sheets, and in a manner that prevents damage and distortion to the component.

Installers shall be familiar with and comply with the manufacturer's Material Safety Data Sheet precautions for use, and use appropriate safety gear when handling materials.

Installers shall conform with all relevant WorkSafe NZ Guidelines and Codes of Practice - including the OSH Guidelines For the Provision of Facilities and General Safety in the Construction Industry.

7.9.7 Preparation

General

The building must be fully enclosed, weathertight and suitably dry before installation commences.

Check that all preliminary and preparatory building works have been completed to specification and as shown on the drawings.

Check that any required building services installations, including electrical, plumbing, mechanical, fire, or other service located behind the ceiling line and/or wall line, have been completed.

Supporting timber framing shall comply with NZS 3604, or with NZS 3603 and AS/NZS 1170 for specific design, and have a maximum moisture content 18% at the time of installation.

Supporting light structural steel framing shall comply with the requirements of AS/NZS 4600 or the NASH Standard for Residential and Low-rise Steel Framing, Part 1: Design Criteria. All light structural steel framing members shall satisfy the requirements of AS/NZS 1170.

Supporting steel stud partitioning shall comply with AS 1397 and as specified and shown on the drawings.

Supporting steel structures shall comply with NZS 3404.

Supporting concrete structures shall comply with the CCANZ CP 01:2011 or with NZS 3109. New concrete must have aged for a minimum of 28 days.

Supporting concrete masonry structures shall comply with NZS 4229, or with NZS 4230 and AS/NZS 1170 for specific design.

Carry out all necessary substrate inspections and preparatory work in accordance with the GIB® Rondo® Metal Batten System Manual and the GIB® Site Guide prior to installation.

Confirm the location and details of movement control joints, as indicated on the drawings, prior to installation.

The commencement of work on each section/area shall be deemed to indicate full acceptance by the installer that all preparatory works by other trades is complete.

7.9.8 Installation

GIB® Rondo® 310 Ceiling Batten System (450mm c/c battens)
GIB® Rondo® 310 Ceiling Batten System. Installed in accordance with the GIB® Rondo® Metal Batten Systems Manual, to the locations, layout, levels and details shown on the drawings. Suitable for 10mm thick, single layer, internal plasterboard ceiling linings for residential applications.

Ceiling Batten Set-out:
- Batten Spacing: Maximum 450mm centre-to-centre spacings.
- Batten Span: Maximum 1200mm for multi-span battens. Maximum 900mm for single-span battens (non-jointed), and for garage ceilings.

Confirm the ceiling lining fixing and installation requirements prior to installing GIB® Rondo® 310 Metal Ceiling Battens. Make allowance for the lining thickness when establishing the finished batten datum level.

For Multi-span Battens: Set-out GIB® Rondo® 310 Metal Ceiling Battens at maximum 450mm centre-to-centre spacings, with a maximum batten span of 1200mm, to the areas, levels and details shown on the drawings.

For Single-span Battens (non-jointed): Set-out GIB® Rondo® 310 Metal Ceiling Battens at maximum 450mm centre-to-centre spacings, with a maximum batten span of 900mm.

Screw-fix GIB® Rondo® perimeter angle and/or channel to walls, true to line and level, with 32mm x 8g x GIB® Grabber® wafer head needle tip screws at 300mm centres max.

Fix GIB® Rondo® batten clips along the batten lines, 900mm or 1200mm apart (as above), to the support framing with 32mm x 8g GIB® Grabber® wafer head needle tip screws or pairs of 40 x 2.8mm GIB® Nails. Batten clip fixings and set-out shall be to the manufacturer's installation requirements for the clip type, batten type and batten set-out.

Securely fasten the batten clips in place so that the battens are fixed at the correct datum level and are parallel, straight and true to line. Support batten ends on perimeter angle or channel, or alternatively, cut, fold and fix the batten end to the top plate.

Use full length battens. When jointing is necessary, joint battens using the manufacturer's proprietary batten jointer for the batten type.

Do not fix batten clips directly to H3.2, CCA, CuAz or ACQ treated timber - fully separate the clips from timber with DPC or other approved material.

Where required, provide additional battens for ceiling-mounted fixtures and fittings at the set-out shown on the drawings.

GIB EzyBrace® Ceiling Diaphragms:
- When installed as a component of GIB EzyBrace® ceiling diaphragms, the battens must be fixed directly to the support framing.
- If GIB® clips are used, then a timber block (min 300mm) or a continuous timber member must be fixed alongside the support framing to create a direct connection.

7.9.9 Completion

Carry out a final inspection immediately after installation. Check that the GIB Rondo Metal Batten System has been installed correctly in accordance with the GIB® Rondo® Metal Batten Systems Manual and installation tolerances, to the correct set-out and details shown on the drawings, and that the installations are accurately aligned true to line, level (and/or plumb) and plane.

Check that the installed layout allows for the correct positioning and installation of all penetrations and services fixtures and fittings as indicated on the drawings.

Check for any damage and defective work - repair or replace as necessary to the required standard.

Leave all of this work complete and to the required standard in accordance with the manufacturer's warranty requirements, as shown on the drawings.

Leave completed works and surrounding surfaces clean and free of rubbish and debris. Remove all rubbish and excess material from the site.

Issue to the Owner a copy of the a copy of the GIB® Product and System Warranty.

Provide all necessary Producer Statements.

7.10 Thermakraft Underlay, DPM & DPC

7.10.1 Scope

Supply and install the specified Underlays and Membranes from Thermakraft Ltd to the locations identified on the drawings, complete with all accessories. All aspects of this work shall be in complete accordance with Thermakraft Ltd technical information and installation requirements (check www.thermakraft.co.nz, or call 0800 806 595 for the latest editions), other relevant product manufacturers' recommendations, and as shown on the drawings.

No substitutions are permitted for the specified Underlays and Membranes from Thermakraft Ltd.

7.10.2 Damp-Proof Membrane

Thermathene Black (250µm). A 250 micron thick (0.25mm), tear resistant, polyethylene film sheet concrete underlay. Coloured black.

Installed over nominal 10mm (max. 25mm) thick compacted sand blinding layer, over a properly prepared base course, as a moisture vapour barrier under concrete slabs on-ground (prior to concreting), in accordance with the manufacturer's requirements and as shown on the drawings.

All joints lapped 200mm and continuously sealed with Thermakraft White General Purpose Tape. Tape-seal around penetrations. Inspect immediately before pouring concrete and repair any holes or other damage.

Installed Location:

7.10.3 Damp-Proof Course

Supercourse 500 DPC. A 0.75mm thick, high-impact, single-layer Polyethylene film, embossed on both sides. Available in 50mm 75mm, 90mm, 100mm, 150mm, 200mm, 250mm, 300mm, 400mm, 500mm and 1000mm roll widths. Supercourse 500 DPC is suitable for use as separation barrier between most incompatible and dissimilar materials.

Used as a general damp proof course (DPC) for separating timber and wood-based products and metal from concrete, masonry, brick, and stone surfaces, and as a moisture barrier.

Also used as a concealed flashing behind brick veneer cladding in accordance with NZS 4229 and NZBC E2/AS1.

Installed in accordance with the manufacturer's requirements, BRANZ Appraisal No.329 (2016), and as shown on the drawings.

7.10.4 Wall Underlay

Watergate Plus 295. A fire-retardant, absorbent, breathable, composite non-woven polyolefin synthetic underlay. Nominal weight 110g/m^2.

Installed as a standalone flexible underlay over timber or steel wall framing in accordance with the manufacturer's requirements and BRANZ Appraisal No.695 (2010), in NZS 3604 Wind Zones up to and including 'Very High'.

Installed as a flexible underlay over a rigid air barrier in accordance with NZBC E2/AS1 9.1.7.2 to the manufacturer's requirements and BRANZ Appraisal No.695 (2010), in NZS 3604 Wind Zones up to and including 'Extra High'.

Watergate Plus can be used with absorbent and non-absorbent direct-fixed wall claddings, and absorbent and non-absorbent wall claddings over a 20mm drained cavity, and masonry veneer cladding over a drained cavity in accordance with NZBC E2/AS1 and BRANZ Appraisal No.695 (2010).

Do not leave Watergate Plus 295 exposed on walls for more than a total of 60 days before covering.

Installed Location:

7.10.5 Roof Underlay

Thermakraft 215 Building Paper. A self-supporting, absorbent, breathable, bituminous impregnated non-synthetic underlay (non-fire retardant). Heavy class, nominal weight 400g/m^2.

Installed as a roof underlay over timber or steel roof framing in accordance with the manufacturer's requirements and as shown on the drawings.

Thermakraft 215 Building Paper roof underlay can be used directly under direct-fixed roof claddings, or directly under roof tile battens in accordance with Thermakraft requirements.

Thermakraft 215 Building Paper roof underlay must installed in a manner that prevents ponding of water. Provide additional support at no more than 300mm centres when Thermakraft 215 Building paper is installed on roofs with slopes less than 10°.

Do not leave Thermakraft 215 Building Paper exposed on roofs for more than a total of 7 days before covering.

Installed Location:

7.10.6 Underlay Support

Ausmesh Safety Netting. A 150mm x 300mm x 2mm diameter galvanised wire safety mesh complying with AS/NZS 4389.

Used as a support for roof underlays and non-rigid insulation, and installed in accordance with the manufacturer's requirements, AS/NZS 4389, and as shown on the drawings. Suitably jointed and tensioned when installed to avoid any sagging and to keep the roof underlay in a flat plane.

Do not walk or stand on installed Ausmesh Safety Mesh or use it as a working platform.

Installed Location:

7.10.7 Window Flashing Tape

Aluband Window Flashing Tape

Aluband Window Flashing Tape. A polymeric faced, bituminous modified, self-adhesive tape with a release backing paper. Designed to be used in conjunction with Thermakraft Corner Moulded Piece and Thermakraft underlays as part of the Thermakraft Window Sealing Warranty System.

Aluband Window Flashing Tape is suitable for use on timber or steel framed buildings, in conjunction with a compatible flexible underlay, around framed joinery openings as a secondary weather barrier, in NZS 3604 Wind Zones up to and including 'Extra High'.

Aluband Window Flashing Tape can be used on the sill and lintel of framed joinery openings, and to seal flashing upstands to a flexible underlay.

Physical Properties:
- Thickness: 0.65mm.
- Installation temperature range: minimum 5°C; maximum 30°C.
- Maximum UV exposure: 42 days.
- Tape width: Available in 75mm, 150mm, and 200mm wide rolls.

The width of Aluband Window Flashing Tapes used shall be selected to suit the depth of framed openings and Thermakraft installation requirements.

Installed in accordance with the requirements of the Thermakraft Window Flashing System Design & User Guide and BRANZ Appraisal No.878 (2014), to the locations and details shown on the drawings.

Aluband Window Flashing Tape should not be applied directly or indirectly (over flexible underlay) to timber that has been freshly LOSP treated. Always allow LOSP solvent to fully flash off before covering with underlay and applying Aluband Window Flashing Tape.

Do not leave Aluband Window Flashing Tape exposed to weather and UV light for more than 42 days after installation.

Flashing Tape Size:
Installed Location:

7.10.8 Underlay Penetration Seals

Multi-Fit Penetration Seals

Thermakraft Multi-Fit Penetration Seals. A range of pipe and service penetration seals consisting of soft, flexible EPDM membrane with a self-adhesive flange.

Multi-Fit Penetration Seals are part of the Thermakraft membrane system, and are a patented airtight solution for round or rectangular pipes, cables or conduits when passing through underlay barriers.

Pipe seals accommodate pipe diameters from 15mm up to 110mm. Cable seals accommodate cable diameters from 7mm up to 22mm, and 80m trunking.

Installed in accordance with the manufacturer's requirements and BRANZ Appraisal No.942 (2017), with stand-alone flexible wall underlay over timber or steel wall framed walls on building situated in NZS 3604 Wind Zones up to and including 'Very High'.

Installed in accordance with the manufacturer's requirements and BRANZ Appraisal No.942 (2017), with flexible wall underlay used over a rigid wall underlay on buildings situated in NZS 3604 Wind Zones up to and including 'Extra High'.

7.10.9 Co-operation

Co-operate with other trades to ensure that all preliminary and preparatory works are completed to specification and as shown on the drawings.

Coordinate with other trades to install Thermakraft Underlays, DPMs, and DPCs as required.

7.10.10 Workmanship

Where required by the NZ Building Act 2004 it is the building contractor's responsibility to ensure that all restricted building work is carried out by a Licensed Building Practitioner.

All installation work shall be carried out by experienced and competent tradespersons, familiar with the specified products and installation techniques, in accordance with the manufacturer's requirements, and to fully comply with all warranty requirements.

All cutting, joining, and fixing techniques shall be exactly as recommended by the manufacturer, and carried out with the use of suitable tools and equipment appropriate for the application. All work shall be such as to leave a neat, efficient, and weathertight installation.

7.10.11 Delivery & Handling

Store underlay rolls on end, undercover, on a flat, clean and dry surface. Keep stored materials dry, out of direct sunlight, and protected from damage and contamination at all times.

Handle materials in accordance with the manufacturer's requirements and in a manner that prevents damage to or deterioration of the product.

Do not used damaged or defective materials, or products that are beyond their designated shelf life.

Installers shall be familiar with and comply with the manufacturer's safe handling requirements and precautions for use, and shall use appropriate safety gear when handling materials.

Installers shall conform with all relevant WorkSafe NZ Guidelines and Codes of Practice - including the OSH Guidelines For the Provision of Facilities and General Safety in the Construction Industry, as well as the Best practice guidelines for working on roofs for roofing installations.

7.10.12 Preparation

General

Prior to installation, carry out all necessary inspections and preparatory work required, and ensure that all preliminary works by other trades has been completed to specification and as shown on the approved drawings.

Do not commence installation until all necessary preliminary works by others is complete and to the required standard. The commencement of work shall be deemed to indicate full acceptance by the installer that all preliminary works by other trades is complete.

Supporting timber structures shall comply with NZS 3604, or with NZS 3603 and AS/NZS 1170 for specific design, and have a maximum moisture content in accordance with the requirements of NZS 3602 at the time of installation.

Supporting lightweight steel framed structures shall comply with NASH 3405, or the NZBC for specific design.

Supporting steel structures shall comply with NZS 3404.

Under-Slab Basecourse

Under-Slab Basecourse - prior to laying under-slab DPM, check all aspects of preparatory works, including but not limited to:

- Check that the under-slab basecourse has been correctly laid and compacted as specified.
- Check that the surface has been properly prepared and compacted to the required standard, and is smooth and flat.
- Ensure any sand blinding is free of aggregate, sharp protrusions.
- Ensure the final surface is free of hollows and ponded water prior to laying the DPM.

Timber Framing

Timber Framing - check all aspects of preparatory works, including but not limited to:

- Check that timber framing has been completed as shown on the drawings, complies with NZS 3604 or AS/NZS 1170 for specific design for timber framing, and is in accordance with Thermakraft requirements.
- Check that framing is securely fixed, true to line and plane, is plumb and level where required, and is trimmed at edges, openings and penetrations as required.
- Check that timber framing has a maximum moisture content of 20% at the time of installation.
- Check that there are no projections due to structural bracing and bracketry etc.

7.10.13 Wall Underlay Installation

Watergate Plus 295 Wall Underlay

Watergate Plus 295 Wall Underlay shall be installed, printed face out, to the exterior face of the wall framing, run horizontally, starting from the bottom edge and finishing at the top edge, extending 35mm below the bottom plate or bearer, and lapped such that any water will be shed to the outside of the underlay with minimum 150mm horizontal laps and minimum 150mm vertical joint laps made over a stud, and kept taut without sagging or bulging.

Fix at maximum 300mm centres, with 6-8mm stainless steel staples or 20mm large-head galvanised clouts or galvanised proprietary fixings. Provide additional fasteners fixed through Thermakraft Stud Strap around framed openings before cutting Watergate Plus 295 at openings.

Cut window and door openings just prior to joinery installation; cut underlay at 45º angle away from each corner and return full framing depth and fasten to inside of frame. Install Thermakraft Corner Moulded flashings and Thermakraft Window Flashing Tape over the underlay at opening corners and along sill trimmers in accordance with Thermakraft requirements.

For drained cavity wall construction where studs are at greater than 450mm centres, install Thermakraft Stud Strap horizontally at 300mm centres to prevent bulk insulation from pushing the underlay into the cavity space.

Porirua City Council
Approved Consent Document
24 NOV 2017
0560/17
BCA Number
David Nolan
On behalf of Porirua City Council

Finish Watergate Plus 295 underlay at edges as detailed.

Install all necessary flexible flashing tapes to openings, around pipes, ducts and other services penetrating the underlay, parapet and balustrade junctions, along head flashings and intersecting flashings when installed, as required to seal the underlay, in accordance with Thermakraft requirements and as shown on the drawings.

Aluband Window Flashing Tape

Install Aluband Window Flashing Tape in accordance with the manufacturer's requirements, to the locations and details shown on the approved drawings.

Window Sills:

- Fit Thermakraft Corner Moulded Piece to the bottom corners of the opening.
- Cut Aluband Window Flashing Tape to the length of the sill trimmer plus an additional 400mm.
- Apply the tape over the underlay along the sill trimmer, with the back edge flush with the inside edge of the framing, and returned minimum 200mm up both trimming studs.
- Fold the tape minimum 50mm over the face of the underlay on the outside of the opening.
- Press the tape firmly in place over the underlay to ensure a continuous weathertight seal is maintained.

Window & Door Lintels:

- Install Aluband Window Flashing Tape to the top corners of framed window and door openings, over the underlay and 200mm along the lintel and 200mm down the trimming stud, with the back edge flush with the inside edge of the framing.
- Fold the tape minimum 50mm over the face of the underlay on the outside of the opening.
- Press firmly in place over the underlay to ensure a weathertight seal.
- Apply a 100mm strip of Aluband Window Flashing Tape at 45° over the taped outside face of each corner.

Avoid joining Aluband Window Flashing Tape. Where necessary, form joins with minimum 100mm overlap, keep any required joining to an absolute minimum.

Do not over-stretch tape during installation, and ensure adequate adhesion and weathertightness is maintained against the underlay.

Do not leave Aluband Window Flashing Tape exposed to weather and UV light for more than 42 days after installation - replace with new window flashing tape if 42 day's exposure is exceeded.

7.10.14 Roof Underlay Installation

Thermakraft 215 Building Paper

Thermakraft 215 Building Paper shall be installed without support on roofs with slopes 10° or greater (unless specified otherwise), run horizontally across the roof slope and over the purlins, starting from the gutter/lowest point up to the ridge/highest point, extending maximum 20mm into gutters, with minimum 150mm side and end laps, lapped such that any water will be shed to the outside of the underlay, and sufficiently tensioned without sagging.

The maximum run length shall be no greater than 10 metres.

Fix at maximum 300mm centres to purlins, with 8-12mm stainless steel staples or 20mm large-head galvanised clouts or galvanised proprietary grippers.

For tiled roofs, lay Thermakraft 215 over the anti-ponding board and rafters/trusses, and fix at maximum 300mm centres to the rafters/trusses before the tile battens are installed.

Finish Thermakraft 215 along roof edges and junctions, valley gutters, and at the ridge as shown on the drawings. Carefully cut underlay at roof openings at 45º angle away from each corner and lap-tape closed to framed up-stands, ducts and other services penetrating the underlay in accordance with Thermakraft requirements and as detailed. Leave underlay minimum 50mm distance clear of the outer liner of flue stacks.

7.10.15 Completion

Check that all underlays have been installed correctly and are properly supported, and that all underlay edges, joins and ends are correctly finished prior to closing off with claddings - all in accordance with Thermakraft installation requirements.

Check installed membranes and underlays for defective work and damage - replace and/or repair as necessary to the required standard.

Leave all of this work complete, and free of defects, and to the required standard in accordance with the manufacturer's warranty requirements.

Issue to the Owner a copy of the Thermakraft maintenance requirements and the Thermakraft product warranties for the installed products.

8 ROOFING

8.1 Preliminary

Refer to General Conditions of Contract and the Special Conditions in this Specification as appropriate. Read this section in conjunction with all other trade sections.

8.2 Compliance

Comply with the New Zealand Building Code 1992 including all revisions and amendments, Verification Methods where appropriate, and construction principles that are embodied in the Acceptable Solutions.

Comply with all relevant provisions and recommendations of:

1170.2:2011(AS/NZS)	Structural design actions - Wind actions
2295:2006(NZS)	Pliable, permeable building underlays
2728:2013(AS/NZS)	Prefinished/prepainted sheet metal products for interior/exterior building applications - Performance requirements
3604:2011(NZS)	Timber-framed buildings
4200.1:1994(AS/NZS)	Pliable building membranes and underlays - Materials
4389:2015(AS/NZS)	Roof safety mesh
4534:2006(AS/NZS)	Zinc and zinc/aluminium-alloy coatings on steel wire
NZMRM Code of Practice	NZ Metal Roof and Wall Cladding Code of Practice - Version 2.2

8.3 Metalcraft Roofing - Longrun Roofing

8.3.1 Scope

Supply and install the selected Metalcraft Roofing as a Roof Cladding to the roofs identified on the drawings complete with all accessories. All aspects of this work shall be in complete accordance with Metalcraft Roofing guides and technical manuals, (check 0800 766 369 for the latest editions), and other relevant product manufacturers' recommendations, and as shown on the drawings.

No substitutions are permitted for Metalcraft Roofing Roof Cladding.

8.3.2 Co-operation

Co-operate with other trades to ensure that roof framing has appropriate spacings, alignments and fixings, and is in accordance with the drawings and NZS3604, and coordinate to ensure that all timber members required for ridges, hips, valleys, barges, penetrations, junctions with vertical faces, etc. are correctly in place.
Note and co-ordinate with the installer of the rainwater system specified.
Ensure that each section of roof is waterproofed as soon as possible after preparatory work is complete; allow to carry out the works in several operations if necessary to comply with this condition.

8.3.3 Material

Steel, 0.4mm BMT.

8.3.4 Product

Colorsteel Maxx.

8.3.5 Profile

Metalcraft Roofing profile 'MC700'.

Location:

8.3.6 Colour

Colorsteel Maxx 'Thunder Grey'.

8.3.7 Components & Accessories

Roof Flashings. Roof flashings shall be fabricated from the same material and coating as the roofing material, to maintain durability and compatibility requirements.
Unless otherwise noted or specified, flashings shall be formable grade 0.55 BMT, to the same standards as the profiled sheets, and notched or provided with a soft edge when installed across the cladding profile - in accordance with the manufacturer's requirements.
Flashings, flashing fastenings and fastening frequency shall be in accordance with the manufacturer's technical literature and the NZMRM Code of Practice.
Do not construct flashing joints and flashing junctions in a manner that rely entirely on sealant to maintain weathertightness.

Profiled Closure Strip. Non-bituminous, compressible, closed-cell foam strips profiled to fit the specified roofing profile. Installed to the details shown on the drawings and in accordance with the roofing manufacturer's recommendation.

Roofing Sealant. Use only neutral-curing silicone sealant, compatible with the specified roofing and flashing materials and finishes and suitable for the required application and use, in accordance with the sealant manufacturer's instructions and to the roofing manufacturer's requirements. All sealed joints must be mechanically fastened, and excess sealant neatly removed to prevent unnecessary dirt buildup. Sealant shall only be used to seal between two metal surfaces, do not fill holes or gaps with sealant.

Proprietary Collar Flashings. Approved EDPM or silicone-polymer proprietary flexible collar flashings for weatherproofing roof-penetrating pipes/flues/ducts. Sized to suit the applicable pipe, flue or duct, and installed in strict accordance with the manufacturer's recommendations and the NZMRM Code of Practice. Use only high-temperature silicone (not EDPM) collar flashings for heated flues and pipes with temperature range between 60°C - 200°C.

8.3.8 Installation

All installation work shall be carried out by experienced and competent tradesmen who are familiar with the techniques and materials specified. All handling and fixing techniques, and all jointing and

sealing materials and techniques, shall be exactly as recommended by Metalcraft Roofing. Handle roofing without scratching, distortion or other damage, store on even bearers, and keep dry until installed.

Set-out the roofing sheets exactly square to building axis and maintain this accurate setout throughout the works, and set-out to lap sheets away from the prevailing wind.
Install the underlay running up and down the slope with minimum 300mm side laps. Do NOT install any fixings to the underlay (to avoid dissimilar metals/electrolysis) - install the underlay length by length as the roofing proceeds and ensure it is taut and evenly lapped when the roofing screws are installed.
Ensure all roofing accessories are installed as the sheets are laid.

Protect the coated surface from damage at all times; replace the whole sheet where a significant depth of the coating has been damaged. Completely clean off all drill and power saw swarf and pop-rivet shanks as the work proceeds (at least daily, and keep them and other rubbish out of the spoutings). Remove trade debris from the roof and from the site progressively, and on completion leave the roof and rainwater system completely clean.

Do not use black lead pencils for marking prefinished roof cladding - permanent marking may result. Observe cladding manufacturer's recommendations where flues discharge above roofs, and for the installation of solar heating panels. Do NOT weld Colorsteel products. NO abrasive disc cutters, no soldering, no lead head nails or lead edged flashings, no touch-up paints, and do not slide tools down the roof.

Screw fix, screws to comply with AS3566 (Self-drilling construction screws) Class 4 and in accordance with Metalcraft Roofing recommendations. (Do NOT use stainless steel screws to fix prepainted cladding). Use only low carbon (
Use fixing systems that will accommodate thermal expansion for long lengths and/or dark colours. Fastening clips and brackets fixed in accordance with Metalcraft recommendations.

All jointing techniques, fixings and sealants to be in accordance with Metalcraft recommendations, as noted on the drawings, and shall be compatible with the roofing material and finish.

Ridges, hips, and barge flashings etc. shall all be matching Colorsteel or other, and as noted and detailed on the drawings. Soft zinc flashing edges neatly dressed down where required, plumbing penetrations custom flexible rubber flashed (fully sealed), and instruct the Plumber that no copper (or brass) pipes are to discharge on to the roof.

8.3.9 Completion

Sweep down completed roof and clean out spouting, gutters and rainwater pipes. Remove debris and unused material from site.
Issue to the Main Contractor a copy of the Metalcraft Roofing maintenance requirements together with the relevant Metalcraft Roofing Warranty for the completed works.

9 ALUMINIUM JOINERY

9.1 Preliminary

Refer to General Conditions of Contract and the Special Conditions in this Specification as appropriate. Read this section in conjunction with all other trade sections.

9.2 Compliance

Comply with the New Zealand Building Code 1992 including all revisions and amendments, Verification Methods where appropriate, and construction principles that are embodied in the Acceptable Solutions.

Comply with all relevant provisions and recommendations of:

1734:1997(AS/NZS)	Aluminium and aluminium alloys - Flat sheets, coiled sheet and plate
1866:1997(AS/NZS)	Aluminium and aluminium alloys - Extruded rod, bar, solid and hollow shapes
2208:1996(AS/NZS)	Safety glazing materials in buildings
4211:2008(NZS)	Specification for performance of windows
4223.1:2008(NZS)	Code of practice for glazing in buildings - Glass selection and glazing
4223.2:2016(NZS)	Glazing in buildings - Part 2: Insulating glass units
4223.3:2016(NZS)	Glazing in buildings - Part 3: Human impact safety requirements
4223.4:2008(NZS)	Glazing in buildings - Part 4: Wind, dead, snow, and live actions
4666:2012(AS/NZS)	Insulating glass units
4667:2000(AS/NZS)	Quality requirements for cut-to-size and processed glass
4668:2000 (AS/NZS)	Glossary of terms used in the glass and glazing industry

9.3 Aluminium Windows & Doors

9.3.1 Alternatives

No specific supplier is nominated, although a list of acceptable brands is given below. The Contractor shall state with his tender which brand he is using.

Thermal performance (NZBC H1/AS1) must be as required to meet the Designer's Thermal Evaluation.

APL Brands:
-Altherm
-First
-Vantage
-Smartwood
-Metro Series
-Thermal Heart
-Architectural Series
-Commercial

ASL Brands:
-Elite
-Fairview
-Residential
-Evolution
-Architectural
-Commercial

Fletcher Aluminium Brands:
-Pacific Residential
-Pacific Thermal
-Pacific Architectural
-Atlantic High Performance
-ALTI
-Nubulite
-Rylock

Nalco Brands:
-Nulook
-Bradnams

9.3.2 Installation Type

Timber Frame Installation - Direct Fix
All windows (and aluminium frame external doors) installation work shall be exactly in accordance with NZBC E2/AS1, the Windows Association's Windows Installation System (WANZ:WIS), and details on the drawings or supplied by the windows manufacturer.
Check framing alignment, and that window openings are square and the correct size for fitting tolerances.
Prepare framing openings by neatly cutting the building wrap at 45º into the corners, turning wrap through the frame depth and fixing to the inside face, flashing the bottom corners with moulded plastic and over-flashing the full sill and 200mm up the jambs with the specified flexible flashing tape, stapled to hold the stretched external corners. At head corners install flashing tape 200mm each way from the corners.

Install the sill flashing, extending from an upstand lip behind the line of the aluminium frame out to lap a minimum of 35mm down over the top of the cladding, sloping at 15º unless the glazing weight requires the frame be blocked up for support. (If the flashing is level for blocking-up the sill, upstand its ends to create 'dams' as shown in E2/AS1).

Set shims or pack as necessary and install the frames exactly true and square. Use appropriate separators between aluminium and other materials, and fix securely with due regard for any anticipated movements and for linings, trim etc.

Install the head flashing, extending 35mm up behind the cladding (and in turn over-flashed with an additional piece of wrap cover extended up under the wrap or flashing or eaves above), sloping at 15º

down to the exterior, and turning down to cover the top of the aluminium frame by at least 10mm, before finishing with a 5mm 45º 'kick out'. Seal between head flashing and cladding at the ends as detailed. Install jamb flashings/sealant or scribers as detailed.
After frames installation install closed cell backing rods as required and expanding foam air-seal the gap between framing and liners.

9.3.3 Interior Finish

Architraved.

9.3.4 Reveal

Timber reveals for paint finish with all sides primed.

9.3.5 Glass Platform

Double Glazed.

9.3.6 Finish

Powder Coated Aluminium - Matt
Polyester powder coating in accordance with WANZ Powder Coating Quality Assurance System and AAMA 2603-98 performance is required.

9.3.7 Hardware

Black Hardware.

Hinges, stays, catches, fasteners, latches, locks and furniture as offered by the window and door manufacturer. Key alike all lockable window hardware able to be keyed alike.

Account for all keys and deliver separately to the site manager. Factory fit all required and scheduled hardware.

9.3.8 Requirements

Samples
Sample of profiles to be used are required.

9.3.9 Workmanship

These windows will be manufacturerd in workshops containing all mechanical equipment appropriate for the work, and by experienced and competent tradesmen who are familiar with the techniques and materials specified.

The manufacturer will co-ordinate with other trades to establish the exact sizes for all frames before fabrication. Frames and sashes will be fabricated true, square, rigid, and 'out of wind', with all joints strongly mechanically fixed, and with mitres tight and fully sealed. Potential thermal, wind and

seismic movements will be accommodated within the construction. All cavities will drain to the exterior, and all drilling swarf etc. will be removed during fabrication.

Stays, hinges, running gear and glazing will be installed as scheduled (the Designer will be notified if any scheduled hardware of fixing position appears to be inappropriate for this project).

Hardware will be fixed true to line and position, and adjusted and oiled as required for correct operation.

Glass will be cut true and square, sized to provide correct edge clearances, blocked into place as required, and all units will be delivered either pressure fit, pocket glaze, or beaded/wedged, unless site glazing is required. Glazing gaskets will be compatible with all adjacent materials, and cut 1% over-length to absolutely avoid stretching during installation. Frames will be braced etc. as necessary for transportation to the site.

Flashings as detailed will be supplied. Flashing materials will be compatible with the windows.

9.3.10 Delivery and Installation

Comply with the New Zealand Building Code 1992 including all revisions and amendments, Verification Methods where appropriate, and the construction principles that are embodied in the Acceptable Solutions.

Arrange for delivery of windows to the site only when a suitable storage situation is available for them, handle the windows in accordance with the manufacturers requirements, avoid any frame distortion, avoid rubbing damage, avoid contact with concrete, plaster, mud etc. and keep them dry. Retain protective coverings for as long as possible, and remove them at completion.

Experienced and competent tradesmen who are familiar with the techniques and materials specified shall carry out all installation work. Fix in accordance with the manufacturer's instructions. Take utmost care to avoid damage to anodized or powder coated surfaces - correction of any such disfigurement requires written authority - replace any badly damaged items.

Use fixings compatible with the materials involved, as recommended by the windows manufacturer and to comply with the DWP requirements, basically aluminium or Type 316 stainless steel where exposed externally; galvanized to AS/NZS 4680, 610g/m2, may be used where not exposed.

Thoroughly check all preparatory work to openings prior to installation, including underlay, corner seal tapes, adjacent cladding, pre-installed flashings, waterproofing systems etc. as appropriate. Use inert barriers or coatings to prevent contact between dissimilar metals or between aluminium and concrete.

Install flashings as detailed and supplied by the windows manufacturer, installed tightly and neatly with absolute minimum tolerances, with head weathering jamb, jamb weathering sill, and sill open (draining) to exterior. Except where the window is recessed all head flashings shall extend 30mm minimum beyond the frame.

Air-seal all frame perimeters to adjacent structure to a depth of 15 - 20mm with expanding foam or appropriate sealant including a PEF rod at head, sill and jambs to retard the spread of sealant.

Weather-seal frame jambs etc. to adjacent surfaces (or to each other) as detailed or as required by the windows manufacturer, to achieve a fully watertight installation. In preparation for sealant the joints shall be clean, dry, and primed if necessary. Insert closed cell polyethylene backer rods or a polyethylene tape slip layer if required. Mask adjacent surfaces if appropriate, install the sealant fully in accordance with the sealant manufacturer's recommendations, and finish to even smooth surfaces.

Remove trade debris progressively, appropriately clean any affected adjacent surfaces, thoroughly clean the windows, check that all hardware is in full working order, and provide safety indication of the glass for the balance of adjacent works.

10 INSULATION

10.1 Preliminary

Refer to General Conditions of Contract and the Special Conditions in this Specification as appropriate. Read this section in conjunction with all other trade sections.

10.2 Compliance

Comply with the New Zealand Building Code 1992 including all revisions and amendments, Verification Methods where appropriate, and construction principles that are embodied in the Acceptable Solutions.

Comply with all relevant provisions and recommendations of:

4218:2004(NZS)	Energy efficiency - Small building envelope
4218:2009(NZS)	Thermal insulation - Housing and small buildings
4220:1982(NZS)	Code of practice for energy conservation in non-residential buildings
4243.1:2007(NZS)	Energy efficiency - Large buildings - Building thermal envelope
4246:2016(NZS)	Energy efficiency - Installing bulk thermal insulation in residential buildings
NZBC H1/AS1	Energy efficiency

10.3 Pink® Batts® Insulation

10.3.1 Scope

Supply and install Pink® Batts® Insulation, as specified herein, to the locations identified on the drawings, complete with all accessories required for proper installation and performance. All aspects of this work shall be in complete accordance with Tasman Insulation technical information and installation requirements (check pinkbatts.co.nz, call 0800 746 522, or email customer@pinkbatts.co.nz for the latest editions), other relevant product manufacturers' recommendations, and as shown on the drawings.

No substitutions are permitted for Pink® Batts® Insulation.

Pink® Batts® insulation is certified under the GREENGUARD Certification Program (UL 2818). Being certified for indoor air quality gives an assurance that products meet strict chemical emissions limits (including minimal levels of VOCs and formaldehyde), to help create healthier indoor environments.

The following is a list and a general description of the extent of the Pink® Batts® Insulation works, which are more specifically defined in the contract documents, required for the completion of the contract works:

10.3.2 Requirements

Safety

Comply with the Health and Safety at Work Act 2015 (HSWA), and with all relevant Health and Safety at Work Regulations 2016, and with all relevant WorkSafe New Zealand (WorkSafe) Approved Codes of Practice and WorkSafe Information and Guidance, particularly those for construction and building maintenance.

Warranty - applies to BRANZ Appraised Pink® Batts® Ceiling & Wall products

Pink® Batts® Lifetime Product Warranty:

- 50 Years Warranty for BRANZ Appraised Pink® Batts® ceiling and wall products installed according to the warranty conditions.
- Provide the Pink® Batts® Lifetime Product Warranty on the manufacturer's standard warranty form.
- Commence the warranty from the date of permanent installation.

Substitutions

Pink® Batts® Insulation shall be as specified herein and as indicated on the approved drawings. The substitution of Pink® Batts® branded products for alternative brands is not permitted under any circumstances.

The substitution of a specified Pink® Batts® product for an alternative Pink® Batts® branded product by the Installer (PinkFit® or other) shall only be permitted with the Architect's/Designer's written authorisation, and shall be at no additional cost to the Principal. Should any resultant extra work and/or redesign work be required to accommodate alternative Pink® Batts® branded products to satisfy design, performance and compliance requirements, then the cost of these shall be borne by the Installer.

Inspections

Carry out all necessary pre-installation and pre-line inspections of Pink® Batts® Insulation for each area of work in accordance with the requirements of industry best practice recommendations and manufacturer guidelines.

Complete a Pre-Installation Checklist prior to installation, and a Pre-Line Checklist before handing over for subsequent work.

Note: Pink® Batts® checklist applies only to Pinkfit.

10.3.3 Wall Thermal Insulation

Pink® Batts® Ultra® R2.6 Wall

Pink® Batts® Ultra® R2.6 Wall - product code 7127126. A non-combustible, resin bonded fibrous glasswool insulation manufactured from recycled and virgin glass and cured urea extended phenolic resin. R-value R-2.6. 90mm thick x 560mm wide x 1140mm long segments.

BRANZ Appraised for use as a thermal insulating material for framed or part-framed walls, ceilings and roofs of domestic and commercial buildings according to the conditions and limitations of BRANZ Appraisal No.238 (2012).

Pink® Batts® Ultra® R2.6 Wall is licenced with Environmental Choice New Zealand: Thermal Building Insulants Licence No.2504017.

Installed as wall cavity thermal insulation to the locations shown on the drawings in accordance with the manufacturer's requirements.

Installed Location:

10.3.4 Ceiling Thermal Insulation

Pink® Batts® Classic R3.2 Ceiling
Pink® Batts® Classic R3.2 Ceiling - product code 7110132. A non-combustible, resin bonded fibrous glasswool insulation manufactured from recycled and virgin glass and cured urea extended phenolic resin. R-value R-3.2. 170mm thick x 432mm wide x 1220mm long segments.

Pink® Batts® ceiling insulation is a lightweight flexible glasswool insulation products designed to:
- thermally insulate ceilings in new homes, be retrofitted into existing homes without insulation, or over existing insulation for better performance;
- fit easily into standard ceiling constructions, or be easily cut to fit non-standard constructions;
- meet the requirements of the New Zealand Building Code for different designs and environments.

Pink® Batts® Classic R3.2 Ceiling is BRANZ Appraised - refer to BRANZ Appraisal No.238 (2012).

Installed as ceiling thermal insulation to the locations shown on the drawings in accordance with the manufacturer's requirements.

Installed Location:

Pink® Batts® Skillion Roof R3.2
Pink® Batts® Skillion Roof R3.2 - product code 7110232. A non-combustible, resin bonded fibrous glasswool insulation manufactured from recycled and virgin glass and cured urea extended phenolic resin. R-value R-3.2. 115mm Max. thickness x 432mm wide x 1220mm long segments.

Pink® Batts® Skillion Roof insulation products are specifically designed for skiillion roofs, and provide high levels of thermal performance while ensuring the maximum thickness the segments can achieve.

Pink® Batts® Skillion Roof insulation has been BRANZ Appraised for use as a thermal insulating material for timber framed skillion roofs of domestic and commercial buildings - refer to BRANZ Appraisal No.767 (2012).

Installed as ceiling thermal insulation to the locations shown on the drawings in accordance with the manufacturer's requirements.

Installed Location:

10.3.5 Co-operation

Co-operate with other trades to ensure that all preliminary and preparatory works are completed to specification and as shown on the drawings.

Coordinate with trades to install Pink® Batts® Insulation as required.

10.3.6 Workmanship

Where required by the NZ Building Act 2004 it is the building contractor's responsibility to ensure that all restricted building work is carried out by a Licensed Building Practitioner.

The building envelope must be fully enclosed and weatherproof, with construction materials framing at or below the required moisture content, before insulation installation commences.

All installation work shall be carried out by registered PinkFit® Installers, or by experienced and competent installers, familiar with the specified products and installation techniques, in accordance with the manufacturer's requirements, and to fully comply with all warranty requirements.

Carry out all necessary pre-installation and pre-line inspections of Pink® Batts® Insulation for each area of work in accordance with the requirements of industry best practice recommendations and the manufacturer's guidelines. Inspect all Pink® Batts® insulation work before it is closed off with linings or made inaccessible.

Insulation shoud be installed without leaving gaps or compresing the material. Always maintain full insulation thickness to ensure that the stated thermal and acoustic values are achieved. Do not install insulation into closed cavities with a cavity depth less than the insulation's stated thickness.

10.3.7 Delivery & Handling

Store the Pink® Batts® Insulation materials undercover, in a weatherproof environment, off the floor, on a flat, even surface in accordance with the manufacturer's requirements. Keep materials dry and protected from damage, moisture and contamination at all times.

Do not use damaged or defective materials.

Should a problem be encountered with any Pink® Batts® Insulation product, immediately contact Pink® Batts® on 0800 746 522. Do not continue to use the product that is not performing to specification or expectation. Keep the product in question and where possible, the bale package documentation with batch number and/or date of manufacture.

Handle Pink® Batts® Insulation products in accordance with the manufacturer's requirements and in a manner that prevents damage to and contamination of the product. Ensure installed Pink® Batts® Insulation remains dry at all times.

Installers shall be familiar with and comply with the manufacturer's Safety Data Sheet precautions for use, and use recommended safety gear when handling materials.

Conform with all relevant WorkSafe NZ Guidelines and Codes of Practice - including the OSH Guidelines For the Provision of Facilities and General Safety in the Construction Industry.

10.3.8 Installation

General

Install Pink® Batts® Insulation in accordance with NZS 4246 and the manufacturer's requirements.

Each installation is unique, so prior to installation:
- check for all hazards that may cause injury; and
- carry out any required repair work before starting installation; and
- ensure there's adequate lighting to identify any hazards; and
- treat all electrical cables as live, being careful not to cut or expose cables and wires; and
- beware of other sharp objects (protruding nails, splinters etc.), pests (bees and wasps), loose boards and pipe work.

Pink® Batts® Wall

Pink® Batts® wall insulation segments shall be oversized by no more than 10mm than the wall framing spacings. If cutting is required, cut oversize by 5mm to ensure a good friction fit.

Friction fit the insulation segments between wall framing members ensuring there is no undue compression, gaps, creases, tucks or folds, and the insulation is finished flush with the framing edges.

Firmly butt all insulation segment joins together, ensuring there are no gaps, and maintain full thickness of the insulation to ensure maximum thermal performance.

Fit Pink® Batts® insulation tight and close around electrical cables and pipes. As necessary, partially cut and fit insulation around cables and pipes. Take extreme care when working around exposed electrical cables - treat all cables as live.

Pink® Batts® Ceiling - Truss/Framed Roof

Pink® Batts® insulation segments shall be oversized by no more than 10mm wider than the ceiling framing spacings.

Lay the insulation segments over the ceiling, friction fitted between the ceiling joists/truss chords, ensuring there is no undue compression, gaps, creases, tucks or folds in the insulation.

Firmly butt all insulation segment joins together, ensuring there are no gaps, and maintain full thickness of the insulation to ensure maximum thermal performance.

Cover the entire ceiling, including the outer edge of the top plate of external walls - the insulation must cover at least 50% of external top plates.

Maintain a minimum 25mm clearance between the top of the ceiling insulation and any roofing material, including underlay. If required, trim the insulation or use a thinner product around the perimeter.

Ensure that the appropriate clearances are maintained for electrical equipment, heating and ventilation equipment, heated flues and pipes, etc. Where possible, place insulation beneath electrical wiring and plumbing. Take extreme care when working around exposed electrical cables - treat all cables as live.

Pink® Batts® Skillion Roof

Pink® Batts® Skillion Roof insulation segments shall be oversized by no more than 10mm wider than the rafter spacings.

Friction fit insulation segments between rafters/top chords, behind ceiling battens where provided, ensuring there is no undue compression, gaps, creases, tucks or folds in the insulation.

Maintain a minimum 25mm clearance between the top of the insulation and any roofing material, including underlay.

Firmly butt all insulation segment joins together, ensuring there are no gaps, and maintain full thickness of the insulation to ensure maximum thermal performance.

Cover the entire area, including the outer edge of the top plate of external walls - the insulation must cover at least 50% of external top plates.

Ensure that the appropriate clearances are maintained for electrical equipment, heating and ventilation equipment, heated flues and pipes, etc. Where possible, place insulation beneath electrical wiring and plumbing. Take extreme care when working around exposed electrical cables - treat all cables as live.

10.3.9 Completion

Check that all specified Pink® Batts® Insulation products have been installed correctly in accordance with the manufacturer's requirements.

Check for damage and defects - replace damaged and defective insulation as necessary to the required standard.

Check that the installed insulation will be adequately protected for durability and performance in accordance with the manufacturer's warranty requirements.

Leave all of this work complete, and in the condition required for proper performance, including for the installation of subsequent linings, in accordance with the manufacturer's warranty requirements.

Leave adjacent surfaces and finished work clean and free of damage. Remove all associated rubbish and waste material from site.

Issue to the Owner a copy of the Pink® Batts® Lifetime Product Warranty for all Pink® Batts® Insulation products installed.

11 JOINERY

11.1 Preliminary

Refer to General Conditions of Contract and the Special Conditions in this Specification as appropriate. Read this section in conjunction with all other trade sections.

11.2 Compliance

Comply with the New Zealand Building Code 1992 including all revisions and amendments, Verification Methods where appropriate, and construction principles that are embodied in the Acceptable Solutions.

Comply with all relevant provisions and recommendations of:

1491:1996(AS/NZS)	Finger jointed structural timber
1859.1:2004(AS/NZS)	Reconstituted wood-based panels - Specifications - Particleboard
2208:1996(AS/NZS)	Safety glazing materials in buildings
2924.1:1998(AS/NZS)	High pressure decorative laminates - Sheets made from thermosetting resins - Classification and specifications
3601:1987(NZS/BS)	Specification for carbon steel pipes and tubes with specified room temperature properties for pressure purposes
3602:2003(NZS)	Timber and wood-based products for use in building
3610:1979(NZS)	Specification for profiles of mouldings and joinery
3619:1979(NZS)	Specification for timber windows
3631:1988(NZS)	New Zealand timber grading rules

11.3 Workmanship

11.3.1 Workmanship

All work shall be carried out by or under the direct supervision of competent and experienced joiners in accordance with recognised good trade practice, and shall be carried out in a properly established workshop complete with all mechanical equipment appropriate for the work. All work shall be in strict accordance with the drawings.

Confer with the Main Contractor to check openings sizes, fittings limiting dimensions and available access dimensions (and make provision for site assembly if appropriate). Additional dimensions will be supplied by the Architect/Designer if required.

All items assembled by appropriate joints customarily employed in good quality work. Joints shall be accurately cut, fitted and full surface glued and shall be tongued, mortice and tenon, doweled or housed in preference to scarfed or mitred. Use screws in preference to nails or brads. Install glue blocks in appropriate locations. Unavoidable screw pockets matching buttoned in clear finished work.

Fine machine sand all visible surfaces and handsand finish to a clean, even surface all clear finished cabinets. Lightly sand arris all projecting edges.

All veneers shall be A grade, completely free of bark pockets, checks, gum streaks, resin pockets, stains, knots (of any size), or pith. Adjacent veneers and boards in clear finished work shall be carefully selected to provide good continuity of colour and grain pattern; this particularly applies to clashing strips on veneered MDF which shall be 2mm thickness solids.

The following are unacceptable defects and will most likely result in rejection of cabinets specified for clear finishing:
a) Scratches, bruises, machine or hammer marks on exposed surfaces;
b) Glue stains on clear finish specified work;
c) Iron-on veneers;
d) Corrugated fasteners and machine staples;
e) Baseboard showing through veneers through excessive sanding (to remove marks presumably).

11.3.2 Delivery

Brace and / or crate all items as required to prevent distortion or disfigurement during transit. Arrange for delivery to site, not during inclement weather. Attend upon the carpenter to identify items and instruct in assembly procedures.

11.4 Materials

11.4.1 Timber

All timber true to NZS 3631 and equal or better than dressing A for all joinery work. Items fabricated from timber which in the opinion of the Architect/Designer is substandard shall be removed from the site.

All timber shall be seasoned to the stable moisture content (approximately 12% for most joinery applications) suitable for its location in the finished work; if the use of inadequately seasoned timber results in winding, warping, twisting or shrinkage opening of joints in the finished work the item shall be replaced (by the Joiner, excepting where the damage has resulted from excessive heating, placing in direct sun or other improper handling). Installation of cabinets shall be delayed until the building is watertight and has dried sufficiently to allow for the maximum settling of substrates.

All timber shall be to nominal sizes shown or specified subject only to normal cutting and dressing tolerances. All non-heart timber used, including cores to doors, etc. shall be treated, and shall be re-seasoned to the correct moisture content after treatment. Joinery timber shall have all machine marks, stains and roughness removed and shall all be sanded smooth.

Ensure that all enclosed surfaces of exterior joinery frames are fully primed before fixing. (If this trade carries out the priming it shall be to the standards required of the Painter).

Unless noted otherwise timbers as follows (use of alternate grades and varieties to those specified is subject to approval in each specific case):

H3.2 Finishing Radiata - Exterior joinery frames, Exterior glazed doors
H1.2 Finishing Radiata - Interior door frames painted
H1.2 Radiata clears - Cabinets specified painted

D.A. Rimu - Interior door frames varnished
D.A. Ht. Rimu and Ht. Rimu veneered board - Cabinets clear finished
D.A. Victorian Ash - Interior doors and stair balustrade capping, varnished.

11.4.2 Hardware

Nails and screws for construction shall be of appropriate gauge, thread design, corrosion resistance, length, material, and finish. Screws to hardware of material and finish to match the hardware item.

Refer to drawing notes for all finishing hardware.

Unless otherwise noted hang the exterior doors on three stainless steel fixed pin 100mm butts, broad butt where 180 degree opening is possible.

Unless otherwise noted interior doors hung on three stainless steel 100mm butts or four off 80x40 stainless steel hinges for 25mm thick doors.

11.5 Elements

11.5.1 Doors

All aspects of exterior and interior doors are specified and noted on the schedules.

11.5.2 Windows / Exterior Doors

Timber sections for windows/exterior doors shall be to exact sizes, with profiles rebated, throated, grooved, sunk etc. as drawn or as required to suit weatherproofing, linings, trim etc. (all sash or door frame rebates 8mm wide x 5mm deep weathergrooved as a minimum). Fabricate frames with housed and checked joints, exterior doors with mortice and tenon, and sashes with mortice and tenon aluminium pinned.

11.5.3 Interior Flush Doors

Hollow core except as otherwise noted. All clashed two edges. All doors timber veneer faced, d.a. Ht. Rimu where clear finishing specified. Frames ex 30mm timber (MDF unacceptable) with 12 x 40mm tightly fixed planted stops. 2mm painting tolerance.

11.6 Other

11.6.1 Stairs

Carpet quality, all primary members radiata (MDF acceptable for risers only), fully housed, rebated, wedged etc. to best trade practice, and all joints fully glued and fixed to avoid any squeaks etc.

11.6.2 Miscellaneous

All items listed below shall be as detailed, and all constructed in accordance with the appropriate sections of the specification above:

- Walk-in-wardrobe shelves, laundry cupboards shelves,
- Passage cupboard shelves.
- Bedrooms 2 and 3 wardrobes.

12 PAINTING & DECORATING

12.1 Preliminary

Refer to General Conditions of Contract and the Special Conditions in this Specification as appropriate. Read this section in conjunction with all other trade sections.

12.2 Compliance

Comply with the New Zealand Building Code 1992 including all revisions and amendments, Verification Methods where appropriate, and construction principles that are embodied in the Acceptable Solutions.

Comply with all relevant provisions and recommendations of:

2310:2002(AS/NZS)	Glossary of paint and painting terms
2311:2017(AS/NZS)	Guide to the painting of buildings
3750.0:2008(AS/NZS)	Paints for steel structures - Introduction and list of Standards
BRANZ IB 257	Wood primers

12.3 General

12.3.1 Alternatives

The materials specified in this section or on the drawings indicate the required standards for these works. Alternatives which are considered equal to or superior to these may be tendered for approval (in writing, and they must NOT be used unless they are approved in writing).

12.3.2 Co-operation

Co-operate with all trades and attend upon Concretor, Joiner, Carpenter, etc. to ensure that the surfaces provided by these trades are completely suitable for the Painter works that are required.

12.3.3 Preparation

No painting or varnishing or other surface coating work shall be undertaken unless the surfaces to be coated are in a correct and proper condition to ensure first class results.

Inspect the works of other trades on which Painter work is scheduled and report to the Main Contractor and the Architect/Designer any defects or irregularities that would affect the permanency or finish of the painting work, and do not proceed until the defects or irregularities have been completely rectified. Failure to examine and report will be construed as an acceptance that all preparatory works are completely satisfactory.

This clause does not relieve the Painter of any of the usual preparatory work to surfaces customarily performed by this trade.

Clean down all surfaces with sugar soap, strippers, mould killers, etching agents, etc. as required. Sand or rub all sharp edges off exterior timbers and other materials as appropriate before painting.

Finish rub down ALL surfaces. Ensure that the moisture content of all substrates is appropriate. Remove locks, fastenings, and similar hardware before painting and refix on completion. Remove all electrical switch and power plates before painting and refix them on completion. Mask adjacent surfaces as required to a true line and remove the masking on completion. Dust and wipe down all surfaces for Painter work and completely remove all dust, rubbish, dirt etc. from areas involved immediately prior to commencement. To each area of the works complete all surface preparation before applying paint to any surface.

12.3.4 Protection

Take adequate precautions to prevent paint spots falling on prefinished or similar surfaces, and extreme care to keep absorbent materials (e.g. cedar, sawn framing, decking, paving) completely clean during all adjacent painting work. Correction of any such disfigurement shall be to the Architect/Designer's approval.

12.3.5 Qualifications

The Painting Subcontractor must be a member of the Master Painters Association. All work shall be of the highest reasonable standard, and executed by experienced and competent tradesmen to the Customers approval.

12.3.6 Workmanship

Strictly adhere to all Manufacturers' instructions.

Strictly observe Manufacturers' requirements with regard to surface and air temperatures for painting. No work shall be carried out on surfaces that are not completely dry, and no external work shall be carried out during damp or wet conditions.

In all finishes any irregularities or brushmarks or dust etc. in each preceding coat shall be rubbed down to provide a smooth clean surface for the following coat. Each coat shall be finished over all surfaces before a further coat is applied, and each coat shall be completely dry before subsequent coats. Finish broad areas before painting trim, paint ceilings before walls and walls before joinery, trim and other items.

Each coat and the full completed system shall be of uniform finish, colour, texture and sheen, shall have proper covering of thin edges, corners, end grain etc. and shall be free of blemishes such as runs, sags, fat edges, entrained hairs, brush marks, starved patches etc.

12.3.7 Wallpapers & Lining Papers

Wallpapers and lining papers, where scheduled, shall be hung plumb, true and square, and with precise butts. Patterns shall be accurately matched at each join. All rolls used in any one area shall be from the same batch. Use a fungicide incorporated adhesive that is recommended by the supplier. Edges neatly and precisely cut to the adjacent element. Finish free of air bubbles, wrinkles, gaps or stains.

12.3.8 General

The schedules indicate the general extent of the works to be carried out but are in no way exhaustive in their description of the actual items for painter work. Complete all work necessary for the proper and entire completion of the works. All items and portions of items reasonably inferable but not specifically mentioned are deemed included, i.e. cupboard interiors, the top and bottom of doors, unseen cabinetry tops, etc. All doors shall have equal painter work on ALL surfaces.

Where timber work is specified for priming before fixing the priming shall be thoroughly brushed in to all surfaces, and all exterior timber work for paint finishing shall be fully primed within one week of fixing. Should more than one month elapse between priming and undercoating the timber shall be fully reprimed.

Stopping up work shall be carried out immediately the priming or sealing coat is dry, and shall be solidly placed to finish clean and dry. Stopping tinted to match the timber for clear finished work.

Paint putties within one month of glazing timber frames; paint to impinge on glass to assist sealing.

12.3.9 Materials

All Painter materials shall be ready mixed and delivered in unopened containers. Materials shall be used only for the purpose and in the manner intended by the manufacturer; any apparent scheduled discrepancy in this respect shall be referred to the Architect/Designer immediately for clarification.

Where surfaces are specified to be finished in a particular manner or material, all preparatory work, priming, or undercoating, that is necessary to ensure a proper finish shall be provided, irrespective of any apparent omission herein.

Thinning shall only be to manufacturer's specification. Thoroughly stir as required to lift any settled pigment and ensure the paint is homogeneous. Paints shall be factory or shop tinted to the colour required. Undercoats shall be fully tinted to match the final colour scheduled. All paints shall have the finished film thickness that is specified by the manufacturer (checked by monitoring the coverage per litre).

12.3.10 Completion

Allow to touch up to approval any Painter work which is damaged during the finishing works of other trades. Replace all hardware, remove all masking, covers, containers etc., thoroughly clean all affected surfaces, and leave all spaces ready for immediate occupation. Avoid scratching or abrading glass or hardware during any cleaning.

13 PLUMBING

13.1 Preliminary

Refer to General Conditions of Contract and the Special Conditions in this Specification as appropriate. Read this section in conjunction with all other trade sections.

13.2 Compliance

Comply with the New Zealand Building Code 1992 including all revisions and amendments, Verification Methods where appropriate, and construction principles that are embodied in the Acceptable Solutions.

Comply with all relevant provisions and recommendations of:

1221:1997(AS/NZS)	Fire hose reels
1254:2010(AS/NZS)	PVC-U pipes and fittings for stormwater and surface water applications
1260:2009(AS/NZS)	PVC-U pipes and fittings for drain, waste and vent application
1477:2006(AS/NZS)	PVC pipes and fittings for pressure applications
1546.1:2008(AS/NZS)	On-site domestic wastewater treatment units - Septic tanks
1596:2014(AS/NZS)	The storage and handling of LP Gas
2032:2006(AS/NZS)	Installation of PVC pipe systems
2033:2008(AS/NZS)	Installation of polyethylene pipe systems
2492:2007(AS/NZS)	Cross-linked polyethylene (PE-X) pipes for pressure applications
2537.1:2011(AS/NZS)	Mechanical jointing fittings for use with crosslinked polyethylene (PE-X) for pressure applications - Part 1: Plastics piping systems for hot and cold water installations - Crosslinked polyethylene (PE-X) - General
2642.2:2008(AS/NZS)	Polybutylene pipe systems - Polybutylene (PB) pipe for hot and cold water applications
2712:2007(AS/NZS)	Solar and heat pump water heaters - Design and construction
3500.1:2015(AS/NZS)	Plumbing and drainage - Part 1: Water services
3500.2:2015(AS/NZS)	Plumbing and drainage - Part 2: Sanitary plumbing and drainage
3500.3:2015(AS/NZS)	Plumbing and drainage - Part 3: Stormwater drainage
3500.4:2003(AS/NZS)	Plumbing and drainage - Part 4: Heated water services
3500.5:2012(AS/NZS)	Plumbing and drainage - Part 5: Housing installations
3501:1976(NZS)	Specification for copper tubes for water, gas, and sanitation
4121:2001(NZS)	Design for access and mobility: Buildings and associated facilities
4517:2010(NZS)	Fire sprinkler systems for houses
4602:1988(NZS)	Low pressure copper thermal storage electric water heaters
4603:1985(NZS)	Installation of low pressure thermal storage electric water heaters with copper cylinders (open-vented systems)
4606.1:1989(NZS)	Storage water heaters - General requirements

4607:1989(NZS)	Installation of thermal storage electric water heaters: valve-vented systems
4613:1986(NZS)	Domestic solar water heaters
4614:1986(NZS)	Installation of domestic solar water heating systems
4617:1989(NZS)	Tempering (3-port mixing) valves
4692.1:2005(AS/NZS)	Electric water heaters - Energy consumption, performance and general requirements
4766:2006(AS/NZS)	Polyethylene storage tanks for water and chemicals
5601.1:2013(AS|NZS)	Gas installations - Part 1: General installations
7602:1977(NZS)	Specification for polyethylene pipe (Type 5) for cold water services
7643:1979(NZS)	Code of practice for the installation of unplasticized PVC pipe systems
7646:1978(NZS)	Specification for polyethylene pipes and fittings for gas reticulation
AS/NZS 3500.5:2012	Plumbing and drainage - Part 5: Housing installations
NZBC G11	Gas as an Energy Source
NZBC G12	Water Supplies
NZBC G13	Foul Water

13.3 General

Carry out all works necessary to leave the water, waste, vent and soil systems serving the sanitary fittings and the plumbing hardware shown on the drawings or specified below in correct working order complete with all ancillary systems (safetrays, floor drains, overflows, relief valves, etc.) required, and with all normal incidentals customarily installed by this trade.

Comply with the Building Code, Territorial Authority By-laws and statutory authority Regulations as appropriate. Obtain all necessary permits and consents, serve all necessary notices, arrange for all tests and pay all fees and customary charges in connection with the required works.

13.4 Workmanship

13.4.1 Co-operation

Co-operate with all other trades. Attend upon Concretor, Drainlayer and Carpenter to set out the exact positions of pipe runs before adjacent work is put in hand, and to ensure that all pipes, sleeves, fixings, flashings etc. are correctly incorporated into the structure as construction proceeds.

13.4.2 Workmanship

All plumbing work shall be carried out by, or under the direct control of, properly qualified tradesmen, and shall be to recognised high standards.

Observe best local trade practice to avoid problems which arise from freezing winter conditions.

The cutting away and checking of timbers shall be limited to such dimensions as will not prejudice the purpose for which the timber is used; observe NZS 3604 restrictions on the holing and checking of

joists and beams. Chasing and checking of other materials only to approval. Install seismic restraints to storage tanks and HWCs.

Weatherseal wherever pipes, screws, bolts or other fastenings penetrate an external surface, and particularly roofing; seal with gaskets, flashings (and overflashings if necessary) or mastic as appropriate - any damage that results from failure of such seals will be made good at the Plumber's expense.

Adequately protect all surfaces. Any damage to fittings or surfaces made good by the appropriate trade at the Plumber's expense.

13.4.3 Pipework

Joints between pipes of different materials shall always be to the approval of the TA Plumbing Inspector.

Pipework set-out neatly with a minimum number of bends, and more or less parallel to and at right angles to structural elements - avoid diagonal piping.

All internal pipework shall be concealed except where otherwise is either shown or approved. Exposed pipework shall be accurately and neatly run. Arrange all pipework (and particularly traps) in a manner which will allow maximum future accessibility for repairs or maintenance. Arrange for access panels to any primary maintenance positions, and install conveniently located isolating valves for each group of fittings. Wingbacks securely and squarely fixed. Crox unions usually acceptable only at the final connection to fittings. Install white plastic flanges where pipes penetrate linings in visible locations.

Where pipes are covered with nail fixed linings and trim ensure that their positions are marked on the linings to minimise the risk of subsequent nailings penetrating the pipe. Any such damage shall be rectified immediately, with all consequential damage made good.

Set pipework out in straight runs to even gradients. Fix all pipes to the structure sufficiently to fully support and to prevent sagging or vibration. Clips and saddles shall be the same material as the pipe. Exterior pipes on stand-off brackets. Fixings to the exterior or damp locations shall all be hot dip galvanized unless otherwise noted. Sleeves for pipes or drains penetrating concrete or masonry shall be uPVC, 20mm minimum larger internal diameter than the external diameter of the pipe, finished flush with concrete or masonry, and packed and mastic sealed.

Close open ends of the systems during construction to prevent the entry of foreign matter.

13.4.4 Temperature Movement

All work shall respect in full all probable thermal movements - layouts, fixings and jointings shall be arranged to allow thermal movement without risk of prejudice to watertight conditions, or risk of damage from straining of the pipes which will generate failures.
In particular, observe best local trade practice to avoid problems arising from freezing conditions.

13.4.5 Excavation

Allow to carry out all excavation that is required to suit the services installed by this trade. Check for other services before excavation. Trenches true to line and level, base of trenches clear of loose material, and shore trenches as required to suit the ground conditions. Backfilling shall be carried out by this trade, and be to the requirements specified in Siteworks.

13.4.6 Testing

All plumbing services shall be completed in stages which will allow for proper testing under normal working pressures prior to the application of insulation, concealment or other enclosure. Testing of piped water services shall be by hydrostatic testing in accordance with AS/NZS 3500.1 and shall not show any leakage when subjected to a hydrostatic pressure of 1500kPa for a period of not less than 30 minutes. All leaks remedied and retested. On completion the whole of the plumbing services to be subjected to full operational tests in the presence of the plumbing inspector, with any defects revealed in these tests properly remedied.

13.4.7 Warranties

Warranty cards and manufacturer's guarantees for all items supplied and installed by this trade shall be correctly filled in and handed over at Practical Completion.

13.5 Materials

13.5.1 Materials

Materials shall be delivered with packaging and labeling intact. Incidentals (jointing compounds, PTFE tape, seals, washers, silfos, solvent cements, etc.) shall be completely appropriate for the application involved. The use of imperfect items or items damaged in any way is always subject to approval.

13.5.2 Alternatives

The materials and elements specified indicate the required standards for these works. Alternatives which are equal to or superior to these materials and elements may be tendered for approval.

13.5.3 Materials Separation

Separate dissimilar metals in any circumstances which could produce contact or electrolytic action by a water film, with thick plastic tape, bituminous felt or other inert material. Pipes in contact with or built into concrete or masonry shall be fully spiral wrapped in Denso tape or equal.

13.6 Systems

13.6.1 Wastes & Vents

All traps sized to AS 3500.2. Wastes and vents all uPVC. Wastes shall be to AS 3500.2 falls as a minimum. Vents shall be generally as indicated, but avoid where permissible in compliance with AS 3500.2, or shall be combined above the flood level of the fittings.

Fit bird proof domes to all vents.

13.6.2 Cold Water System

Supply From Existing Toby

All cold water supply pipework shall be polybutylene, arranged and fixed so that all joints are in a fully 'relaxed' condition, without any stress or tension.

Lay on a 20mm main from the existing toby along the route shown on the Site Plan to the connection position noted on the Floor Plan (pipe depth, protection, backfilling, signal strip etc. to comply with all Supply Authority requirements). At the connection position take a branch feed off for the hosecocks (and reticulate to the positions shown and install angle hosecocks) and toilet cisterns and then take the main feed through an accessibly positioned cleanable in-line sediment and dirt filter.

Primary distribution from the water filter shall be in 20mm piping, reducing to 12mm for the final feed to individual items. Install conveniently located isolating valves to turn off each group of fittings, and install a small isolating valve alongside each toilet cistern not integrally fitted with one. (Note that these isolating valves and the hosecocks are not covered by the Plumbing Hardware Prime Cost Sum).

13.6.3 Hot Water System

Gas Instant Hot Water Device

Supply the gas instant hot water device complete with a wall recess box as noted on the drawings and install it where shown on the plan and elevation.

Install pressure relief valves, cold water expansion valves, flow control valves, pressure limit valves, and non-return/isolating valves as required to leave the hot water systems in full design operational order.

Install a tempering valve to control the hot water temperature at any sanitary fixture used for personal hygiene at not more than 55°C.

Flush all pipework before making the final connections. Lag the main distribution pipes full length with wall pipe insulation.

Showers shall have priority feeds, without 'tees', and the pipework layout shall ensure that the showers temperature and pressure remain as even as possible.

13.6.4 Gas Fitting

Is included in the Plumbing trade, although all work must be carried by Registered Gasfitters, and be in complete accordance with all relevant Regulations and standards and be in full accordance with best trade practice.

Obtain all necessary permits and pay all fees. If necessary obtain a Dangerous Goods Licence for the storage installation in the name of the Owner; and if the Owner's signature is required forward all relevant papers to the Architect/Designer.

Test the full systems to all relevant requirements; if any faults are discovered rectify them and then re-test the full system.

Check that all necessary flues comply in all respects with the regulations and the item manufacturer's requirements.

13.6.5 Central Heating

Supply and install all materials, including all minor and incidental items necessary for proper completion of the central heating system specified and shown on the drawings.

Is included in the Plumbing trade, although all work must be carried by experienced tradesmen, be in complete accordance with relevant Regulations and standards, and be in accordance with the best trade practice. Obtain all necessary permits and pay all fees.

Cooperate with other trades to set out required penetrations and ensure that ducts and fittings are correctly incorporated as work proceeds. No account will be taken of abortive works which could have been avoided if full co-ordination had been carried out.

All work shall be such as to leave a neat, efficient, easily maintained and robust installation. Materials, fittings and equipment shall be installed exactly in accordance with the manufacturer's recommendations. Adequately protect all surfaces. Any damage to fittings or surfaces shall be made good by the appropriate trade.

Leave the works clean and tidy with all discarded material removed, and in full operational order.

Any suggested modifications to improve the efficiency of the systems will be considered for approval, but it remains the Subcontractors responsibility to install neat, efficient, easily maintained and robust installations.

13.7 Elements

13.7.1 Sanitary Fittings

Supply and fix all of the sanitary fittings as scheduled below, all fittings checked on delivery for 'perfect' condition, and all fittings plain white.
The Plumber is responsible for fittings from delivery until Practical Completion of the contract. Supply and fix all normal accessories that are not usually supplied with the fitting.

(add schedule here)

13.7.2 Plumbing Hardware

Allow the below net sum for the supply only of selected plumbing finishing tapware. Take delivery, check for 'perfect' condition, and install exactly in accordance with the manufacturer's recommendations. Check all items for correct operation. The plumber is responsible for the hardware from delivery until Practical completion of the contract.

Net sum: $

13.7.3 Appliances

The Plumber will supply the following appliances and install them completely in accordance with their manufacturers instructions, and protect them until Practical Completion:

14 GAS RETICULATION

14.1 Preliminary

Refer to General Conditions of Contract and the Special Conditions in this Specification as appropriate. Read this section in conjunction with all other trade sections.

14.2 Compliance

Comply with the New Zealand Building Code 1992 including all revisions and amendments, Verification Methods where appropriate, and construction principles that are embodied in the Acceptable Solutions.

Comply with all relevant provisions and recommendations of:

3501:1976(NZS)	Specification for copper tubes for water, gas, and sanitation
4219:2009(NZS)	Seismic performance of engineering systems in buildings
5601.1:2013(AS|NZS)	Gas installations - Part 1: General installations
7646:1978(NZS)	Specification for polyethylene pipes and fittings for gas reticulation
NZBC G10	Piped Services
NZBC G11	Gas as an Energy Source

14.3 Gas System - Piped Natural Gas

14.3.1 Scope

Supply, install, test and commission the Gas System Piped Natural Gas shown on the drawings, complete with all system components and accessories required for proper performance, functionality, and compliance. Carry out the works to comply with the requirements of the NZ Building Code, and with all relevant Regulations and Acts and Standards, and the requirements of Local Territorial Authority, and as shown on the drawings and schedules.

14.3.2 Co-operation

Co-operate with other trades to ensure that all preliminary and preparatory works are completed to specification and as shown on the drawings prior to installation.
Co-ordinate with all trades to install the piped gas system and components as required.

14.3.3 Workmanship

Installation work shall be carried out by qualified and experienced tradesmen, under the direct supervision of a NZ certified Registered Gasfitter authorised to undertake the work under the Plumbers, Gasfitters, and Drainlayers Act 2006, in accordance with the requirements of AS/NZS 5601.1, NZS 5258, NZBC G10 and NZBC G11, and with all regulatory authority requirements.

Workmanship shall be of best trade practice, and all work shall be well ordered and set-out and shall be such as to leave a neat, efficient and robust installation. Do not install damaged or defective products. Adequately protect all surrounding surfaces and work done by others during installation.

Any damage to fittings or finished surfaces shall be made good by the appropriate trade at the Gasfitters expense.

14.3.4 Delivery & Handling

Store materials and equipment undercover, off the ground on a flat, level surface in accordance with the manufacturer's requirements. Keep materials and equipment dry, and protect from damage and contamination while stored and as necessary during installation. Restrain stacked gas pipe with wedges to prevent accidental movement and collapse.
Handle all material and equipment in accordance with the manufacturers' recommendations.

14.3.5 General Requirements

New piped gas system from a new connection to the existing in-ground supply pipe or primary meter identified on the drawings. Primary meter supplied and installed by the network utility operator to suit the required design load and supply pressure and pressure drop.
The new system shall include all in-ground and above-ground pipework, an in-ground toby, isolation valves, pressure reducing valve and fittings. Materials and equipment shall be installed undamaged and free of defects. Equipment shall be installed strictly in accordance with the manufacturer's requirements and with all necessary clearances for proper operation and maintenance.

Where pipework is installed in an enclosed space, the enclosed space shall be ventilated in accordance with NZBC E2/AS1. Pipework installed under floor spaces shall be suspended clear of the ground by a minimum of 100mm. Pipework installed in unventilated and/or inaccessible spaces shall be installed without joints - where joints are unavoidable in unventilated and/or enclosed spaces, each joint shall be inspected, tested and proved sound before the pipework is concealed. Do not install pipework in lift wells, air ducts, plenum ceilings, air handling plena, laundry/clothes chutes, rubbish chutes, ventilating ducts, fire hydrant cupboards or fire isolated stairways.

Installation of equipment shall comply with the Gas Act 1992, the Gas (Safety & Measurement) Regulations 2010, and the NZ Building Code. Obtain all necessary permits, pay all fees and give all notices, and complete the works to the approval of the Local Territorial Authority.

Maintain a complete and up to date record of the locations of the main/service and of the equipment and materials used in its construction. The record shall include:

- A dimensioned scaled plan of where the main has been laid, and full details of its depth and type of cover.
- Details of the diameter and type of pipe used.
- The location and type of mechanical joints used; the locations to be clearly marked on the plan.
- Full details and exact location of valves fitted to the distribution system, giving the number of turns required to operate the valve and the direction of rotation.
- Full details of special crossings and any maintenance requirements.

Take all reasonable attempts to limit corrosion of the installation. Corrosion control of pipework shall be in accordance with NZBC G10/AS1 3.0. Separate dissimilar metals by a 5mm air gap or by an

appropriate 2mm thick isolating material. Use proprietary pipe clamps, clips, brackets and hanger supports, and fastenings and anchors appropriate for the installation and support of the piped gas system components and equipment and suitable for the environmental conditions.

In-ground gas pipes shall have warning tape placed in the trench directly above the gas pipe and between 150mm and 300mm below the finished surface level.

Above-ground gas pipes shall be identified by colours and letters within 1m of every valve and in every space/area that the pipe is run, at maximum 6m intervals. Where two different colour markings are required, the second colour shall be positioned between the bands of the first colour. Coloured marker bands shall be minimum 50mm wide, and identifying letters shall be minimum 25mm high.

Where required, gas pipes shall have indicating arrows, minimum 100mm long, showing the direction of flow. Colours, letters, arrows and tags shall be plainly visible from the direction the pipes are most likely to be viewed from.
Where pipes are to be painted, the final coat shall be the appropriate identification colour unless instructed otherwise by the Architect/Designer.
Identify all valves with a numbered brass label showing the normal valve position; number as shown on the drawings.

Underground pipes shall be sleeved and sealed where they penetrate foundations wall and sufficiently buried to protect the piping from physical damage, and have a minimum cover in accordance with NZBC G10/AS1 Table 3. Underground pipework shall be bedded on suitable compacted granular material so that the pipes are supported along their entire length and are not resting on collars and flanges.

Form openings and penetrations through walls, floors and structural elements, as required and as shown on the drawings. Provide pipe sleeves for pipework penetrations through concrete foundation walls and floor slabs and through concrete and/or masonry walls.
Provide proprietary intumescent pipe collars around pipes that pass through a fire separation element (fire-rated wall, floor, duct or riser, or other as shown on the drawings) in accordance with the manufacturer's requirements and as shown on the drawings.

False ceiling spaces and void spaces within cavity and partition walls containing gas pipework shall be constructed as ventilated ducts; ensure that the installation does not compromise any required resistance to the spread of fire or sound transmission or other applicable NZBC code requirements.
Pipework shall be permitted in ventilated ducts in accordance with NZBC G10/AS1 1.5.3.
Pipes fitted in horizontal ducts which have open grille type covers, shall be treated as above-ground pipes.
Avoid installing pipework in unventilated ducts. Where it is necessary for pipes to pass through an unventilated duct or void; the pipe shall be continuously sleeved with the sleeve ventilated at one or both ends into a ventilated space; or the duct void shall be filled with dry washed sand.

Vent lines shall be fitted to all vented safety shut-off systems, gas pressure relief devices, and breather vents installed within a building, and shall be in accordance with the requirements of NZBC G10/AS1 4.0.

Components shall be adequately fastened and restrained for both normal loadings and earthquake loadings in accordance with NZS 4219 and NZS 1170.5. Supply and install all necessary pipe support clamps, clips, brackets, hangers, etc., required to properly support and anchor surface-mounted and suspended pipework.

14.3.6 Polyethylene Pipework

Polyethylene piped gas systems shall be constructed using materials conforming with NZS 7646. Pipework shall be used for in-ground applications only and installed in a manner that minimises any shear, tensile and compression stress loads placed on the pipes. Where a pipe is at a temperature higher than the normal ground temperature; allow the pipe to cool and contract before joining to the pipework system. Do not bend polyethylene pipe more than that recommended by the pipe manufacturer, and avoid joints in pipe bends. When buried in a ground trench, polyethylene pipe shall have a tracer wire and warning tape installed above the pipe.

Do not use polyethylene pipes in the following circumstances:
- Where the operating pressure is in excess of 420kPa;
- Where the ground temperature around a buried the pipe is likely to exceed 20°C or fall below -20°C;
- On in-filled demolition sites or contaminated sites; unless clean, imported backfill material is used;
- Where solvents and harmful chemicals are present;
- Where another pipe material is more appropriate for the situation.

Polyethylene pipe shall be marked:
- Manufacturer & brand name;
- HDPE Gas;
- SDR Rating of the pipe;
- Nominal bore of the pipe;
- The standard to which it complies.

Pipe fittings shall be marked:
- Manufacturer & brand name;
- HDPE Gas;
- Nominal bore of the pipe for which the fitting is intended;
- SDR Rating of the fitting;
- The standard to which it complies.

All pipes and fittings shall be inspected for cuts and deep scratches or other damage before use. Any defective pipe shall not be used. Inspect the pipe bore and remove any foreign matter and temporarily seal ends with stoppers or end caps. Allow to carry out all fusion jointing above ground.

Underground pipes that will be subject to surface loadings similar to roads, then the installation requirements for roadways shall be applied. Where underground service pipes change from polyethylene to steel before entering the building, the polyethylene-to-steel transition point shall be

at least 1m from the point of entry to the building.
Maintain a minimum 150mm separation from other buried services and obstructions.

The standard procedures for fusion jointing shall be to the pipe manufacturer's requirements. Fusion jointing for polyethylene piping systems shall be carried out by 'butt', 'service saddle', 'socket' or 'electrofusion' methods using the approved tools and procedures. Materials from different polymers shall be joined by electrofusion only.
Do not carry out fusion jointing when exposed to adverse weather condition and wind driven dust or sand. Use appropriate weather shields to ensure adequate protection is provided during adverse conditions. Fusion jointing shall only be made with dry pipe, dry fittings and dry fusion tools.
Ensure pipes are sufficiently support to prevent sagging of long lengths and to eliminate any misalignment or movement of pipes during fusion jointing.
Carry out checks and detailed visual examinations during the fusion procedure to ensure that all joints properly formed and aligned. Carry out regular temperature checks of the tools to ensure the correct temperature is maintained at the heating surface
Do not reheat areas of pipes or fittings that have been through the full heat cycle. If a joint has to be abandoned, the new location shall not be less than 250mm from the abandoned ring head. The minimum distance permitted between any butt or socket fusion fitting assembly shall be 4 times the diameter of the pipe.

Mechanical joints shall be restricted to joining metal to polyethylene. Do not thread polyethylene pipe under any circumstances, and keep the use of mechanical couplings to an absolute minimum. Mechanical fittings shall be assembled in accordance with the manufacturer's instructions and shall be protected against corrosion. Do not transmit movement to the polyethylene pipe when tightening mechanical fittings.

Flanged joints shall be made using the appropriate jointing material or gasket. Metallic flanges shall be protected against corrosion, and polyethylene flanges shall be protected against damage to the sealing faces before assembly.

Toby boxes shall be provided for all valves located underground. Two handles shall be provided to allow underground valves to be closed and opened.

Pressure testing shall only be carried out when the complete system has cooled down.

14.3.7 Steel Pipework

Steel pipe shall be in accordance with NZS/BS 1387, NZS/BS 3601, ASTM A53, ASTM A106, or API Specification 5L.
Black pipe is not permitted for below ground use unless it is properly protected against corrosion (galvanising is not a sufficient protection). Black pipe shall be suitably painted or coated or wrapped with an anti-corrosive wrapping when installed above ground. All steel pipework joints located below ground shall be externally protected against corrosion. Black pipe is not permitted with wet gas.

Steel pipe shall be free of burrs, rust, scale, damage and defects. Clean thoroughly with a solvent to remove oil and dirt, and paint with an appropriate primer prior to installation.

Pipework shall follow wall lines, and be straight and true to line, plumb and level, parallel with adjacent pipes, and have the minimum number of bends. Avoid diagonal pipe runs. Arrange pipework for easy dismantling of plant components and valves. Minimise pipe cross-overs. Grade all pipework as necessary to ensure proper venting and drainage. Install tailpipes in accordance with NZBC G10/AS1 1.1.3.

Support pipework in accordance with NZBC G10/AS1 Table 2. Ensure pipework in under floor spaces is supported clear of the ground by as minimum of 100mm. Support pipe risers with suitable fixings and attachments that are capable of supporting the total weight of the riser and allow for differential expansion.

Provide pipe sleeves where pipes pass through walls, floors and ceilings to accommodate movement of the pipes. Do not joint pipes at sleeved locations. Unless shown otherwise, finish pipe sleeves flush with the finished surface. In plant rooms and wet areas, provide steel sleeves that extend above the floor level. Avoid concealed pipe joints; where essential, weld each joint and test hydraulically before embedding or covering the pipe.

Allow for movement due to expansion and contraction, either by loops, deviations in the pipework, or by fitting expansion joints as shown on the drawings. Arrange pipe supports so that the expansion is taken up by the provisions of the expansion design.

Ensure pipes are separated by a minimum of 25mm from any metallic electrical conduit, or metal armoured or metal sheathed electrical wire.

Plug open pipe ends as the works progress to ensure the pipe bore is kept clean and free of scale and contamination.

Threaded malleable iron pipe fittings shall be in accordance with BS 143 and 1256, or ANSI B16.3. Threaded wrought iron pipe fittings shall be in accordance with BS EN 10241 or ANSI B16.11. Pressure-tight screw joints shall be in accordance with NZS/BS 21.

Formed bends shall have a radius of not less than 3 x the pipe diameter without deforming, cracking or damaging the pipe section. Pipes 50mm diameter and larger shall be bent hot. Bend fittings shall have a radius of approximately 1.5 times the pipe bore. All changes of direction other than tees shall be suitably radiused. Where tees are radiused on the drawings, use branch connections swept in the direction of flow, otherwise use square or angled branch connections. Only changes of pipe sizes as shown on the drawings is permitted. Changes of size on horizontal pipes shall be eccentric (flush) with the bottom or top invert level, as appropriate for venting or draining.

Flanged joints may only be used when other jointing methods are impracticable. Flanges and flanged fittings shall comply with AS/NZS 4331, BS 10, ANSI B16.1 and ANSI B16.5. Welding flanges shall be welded in the neck and bore.

All valves shall be readily accessible and neatly aligned. Castings shall be clean, smooth and free from scale, blow-holes, and flaws. Valves, other than those noted or specified, shall comply with specifications approved by the Designer/Engineer.

Welding shall be by welders certified in accordance with the requirements of API Standard 1104 - Welding of Pipeline and Related Facilities. Welders must be qualified for the type of welding undertaken. Welded joints shall comply with BS 2971 test procedures for pressures up to 420kPa, and with API 1104 test procedures for pressures over 420kPa.

Socket-welding pipe fittings and sockets shall be in accordance with NZS/BS 3799 or ANSI B16.11. Butt-welding fittings shall be to BS EN 1053-2, BS EN 10253-3 or ANSI B16.9.

Welding fitting thickness shall not be less than the pipe wall thickness. No sharp or mitred bends will be permitted. Where branch joints, bosses and drain pockets are made, there shall be no obstruction to the bore of the pipe by welding metal or tube projection.

14.3.8 Copper Pipework

Copper tube shall be in accordance with NZS 3501 or AS 1432. Copper and copper alloy capillary fitting shall be in accordance with AS 3688. Copper alloy compression fittings shall be in accordance with AS 3688 or AS D26.
Copper tube is not permitted for below ground use unless it is installed in protective ducting.

Copper tube shall be free of burrs, rust, scale, damage and defects. Clean thoroughly with a solvent to remove oil and dirt prior to installation.

Pipework shall follow wall lines, and be straight and true to line, plumb and level, parallel with adjacent pipes, and have the minimum number of bends. Avoid diagonal pipe runs. Arrange pipework for easy dismantling of plant components and valves. Minimise pipe cross-overs. Grade all pipework as necessary to ensure proper venting and drainage. Install tailpipes in accordance with NZBC G10/AS1 1.1.3.

Support pipework in accordance with NZBC G10/AS1 Table 2. Ensure pipework in under floor spaces is supported clear of the ground by as minimum of 100mm. Support pipe risers with suitable fixings and attachments that are capable of supporting the total weight of the riser and allow for differential expansion.

Provide pipe sleeves where pipes pass through walls, floors and ceilings to accommodate movement of the pipes. Do not joint pipes at sleeved locations. Unless shown otherwise, finish pipe sleeves flush with the finished surface. In plant rooms and wet areas, provide steel sleeves that extend above the floor level. Avoid concealed pipe joints; where essential, weld each joint and test hydraulically before embedding or covering the pipe.

Allow for movement due to expansion and contraction, either by loops, deviations in the pipework, or by fitting expansion joints as shown on the drawings. Arrange pipe supports so that the expansion is taken up by the provisions of the expansion design.

Ensure pipes are separated by a minimum of 25mm from any metallic electrical conduit, or metal armoured or metal sheathed electrical wire.

Plug open pipe ends as the works progress to ensure the pipe bore is kept clean and free of scale and contamination.

Copper and copper alloy capillary fittings shall be in accordance with AS 3688. Copper alloy compression fittings shall be in accordance with AS 3688 or AS D26.
Brazing shall be in accordance with BS EN 14324 using copper-phosphorous brazing alloy to AS 1167-1 or BS EN 1044, with a nominal silver content of not less than 5% and a melting point in excess of 550°C.

Use proper forming tools to expand copper tube, and flares formed with proprietary flaring tools. Copper tube bends shall be formed without deforming, cracking or damaging the pipe section. All changes of direction other than tees shall be suitably radiused. Where tees are radiused on the drawings, use branch connections swept in the direction of flow, otherwise use square or angled branch connections. Only changes of pipe sizes as shown on the drawings is permitted. Changes of size on horizontal pipes shall be eccentric (flush) with the bottom or top invert level, as appropriate for venting or draining.

All valves shall be readily accessible and neatly aligned. Castings shall be clean, smooth and free from scale, blow-holes, and flaws. Valves, other than those noted or specified, shall comply with specifications approved by the Designer/Engineer.

14.3.9 Trenching

Where trenches are to be excavated in a paved area, the paving shall be cut to neat straight lines prior to excavation. Minimise damage to the paved surface either side of the trench when excavating - provide surface protection as necessary.
Where trenches are to be excavated in a grassed area, garden or a berm; the top soil shall be stripped from the area of the excavation and stockpiled separately adjacent to the trench for use in reinstating the surface.

Check for existing services prior to starting any excavation. Trenches shall be of sufficient width and depth to allow for efficient laying and jointing of the pipes and connection of all necessary valves and fittings. Pipes must not be allowed to lie any closer than 150mm to the trench walls.
If any excavation is made deeper than shown, bring the trench up to the required grade with suitable granular fill, in well compacted layers, at no additional cost.

Keep trench excavations free of water with pumps, drainage pipes and other equipment required for dewatering.
Obtain written approval from the Local Authority to discharge trench water into the stormwater system prior to dewatering, and install all necessary silt traps and other filtering and/or detention measures required by the Authority for this.

Only following inspection and approval of pipe laying and jointing can backfilling commence and only with joints left accessible for inspection during pressure testing. Sufficient backfill shall be placed to prevent displacement of pipes during testing and to prevent pipes floating should the trench be flooded.
Gas pipes shall be surrounded and backfilled to a height of 150mm above the top of the pipe with

compacted clean granular material to the same specification as the bedding material. Lay tracer wire as necessary along the line of the pipe.
Subsequent backfill material up to the surrounding ground level or subgrade levels of pavement shall be placed and compacted to 95% Standard Compaction Test in layers no more than 200mm thick.
Lay continuous Warning tape along the length of the buried pipe, between 150mm and 300mm below the finished surface, directly above the gas pipe.

14.3.10 Testing

All caps, plugs, bends, tees and other fittings on mains incorporating flexible joints should be restrained against movement during testing. Trenches should be sufficiently backfilled to retain the pipes in position.
Notices warning that pressure testing is in progress should be prominently displayed where the main is exposed and accessible from the site.
While the pressure is being raised no person shall remain in or enter the trench.

In the case of the renewal or alteration of a main, a check shall be made that the section to be tested is physically isolated from any live main. For service pipes operating at low pressure, isolation shall be with the use of the integral stopper at the service tee. For service pipes operating at medium pressure, isolation shall be achieved by physical disconnection only.
The main to be tested shall be isolated into sections 500 metres or shorter, and each section tested individually. Following satisfactory completion of the sectional tests; tie-in joints shall be tested under operating conditions using leak detection fluid, or PPM level with a combustible gas sensor.

Mains pressure testing, including services above 50mm diameter. All pressure testing shall be conducted with a calibrated high-accuracy pressure gauge. The pressure gauge used shall be such that the test pressure is not less than 50% of the gauge scale.
When testing mains, standpipes should be located at the extremity of the new main and incorporate a relief valve set to lift at a pressure +10% above the specified test pressure.
Where necessary, install pressure recorders. Locate and fit test instruments so that they can be read and operated without entering the trench or standing in line with the end of the main.
Do not use closed valves to cap ends. All valves shall be tested in the open position. Where a valve is fitted at the extremities of the main being tested, the valve shall be securely blanked and anchored against movement.
Air shall be introduced under controlled conditions into the main until the appropriate test pressure is reached. Care shall be taken not to overpressure the pipework.
No work shall be carried out on a main under test except for any necessary soap testing or operation of the valves on the test standpipe.

Before the start of the test period, the temperature of the main should be allowed to stabilise for a minimum period of 4 hours. Following the period of temperature stabilisation, the initial pressure reading shall be taken. A further pressure reading shall be taken at the end of the test duration. Both recordings will be within 1% of the pressure gauge scale. When the test has been completed to the satisfaction of a competent person, the air pressure should be released through a suitable vent in a controlled manner. Check by a gauge or other means to ensure that the pressure has been released.

Pressure testing service alterations. The service pipe shall be physically disconnected from the network and the live-end sealed. An appropriate air test shall be applied to the disconnected service; if sound, the service alteration may be carried out. If the pressure test fails then the service should be abandoned and re-laid.
On completion of the service alteration, an air test of the whole section shall be carried out for the appropriate pressure test procedure (low or medium).
On reconnection of the service, all exposed joints not included in a pneumatic test shall be tested at the network operating pressure using leak detection fluid, or with a combustible gas sensor on LEL Scale.
Following a successful test and reconnection of the altered section; where applicable, a test using a combustible gas indicator associated with a bar hole survey should be made to any existing buried service to ensure the pipe and connections have not been disturbed. All abandoned services shall be isolated and capped.

Where the instrument reading shows a pressure loss greater than that allowed, carry out investigations to find the leakage. All connections, plugs, and fittings shall be re-examined for possible leakage by leak detection fluid. If the leak is not found, further investigations should be carried out until the leakage is found and repaired - a tracer gas, such as ethyl mercaptain (ethanethiol), may be used for this. The main or service should then be retested.

14.3.11 Completion

Demonstrate to the authority that the installation complies with the requirements of the contract documents and with the requirements of all relevant standards and regulatory bodies.
Notify the authority seven days in advance of the tests. Confirm the accuracy of instruments when requested. Provide signed records of all tests. The records shall also show the specified performance.
Certificates of all meter accuracies shall be forwarded to the authority and included in the As-built documents.

Provide as-built drawings of the installation, from the record, shop and working drawings, which shall accurately record the installation.
All isolating valves shall be clearly shown and identified with the same code shown on the valve.
Show all fire barriers, and fire barrier penetrations, the equipment and material used for fire stopping.

Check that the Piped Gas System and components have been installed correctly in accordance with the drawings, schedules and specification, and that the installation has been fully commissioned to the required operating performance and functionality. Check for damage, defects, and faults; replace/repair as necessary.
Leave the works area clean and free of rubbish. Remove rubbish and waste material from the site.

Issue to the Owner all necessary warranties for the installed system and components.

Issue all As-Built Documentation and Certificates required to the relevant parties.

15 ELECTRICAL

15.1 Preliminary

Refer to General Conditions of Contract and the Special Conditions in this Specification as appropriate. Read this section in conjunction with all other trade sections.

15.2 Compliance

Comply with the New Zealand Building Code 1992 including all revisions and amendments, Verification Methods where appropriate, and construction principles that are embodied in the Acceptable Solutions.

Comply with all relevant provisions and recommendations of:

2201.1:2007(AS/NZS)	Intruder alarm systems - Client's premises - Design, installation, commissioning and maintenance
2293.2:1995(AS/NZS)	Emergency evacuation lighting for buildings - Inspection and maintenance
3000:2007(AS/NZS)	Electrical installations (known as the Australia/New Zealand Wiring Rules)
3012:2010(AS/NZS)	Electrical installations - Construction and demolition sites
3100:2009(AS/NZS)	Approval and test specification - General requirements for electrical equipment
3112:2011(AS/NZS)	Approval and test specification - Plugs and socket-outlets
5000.1:2005(AS/NZS)	Electric cables - Polymeric insulated - For working voltages up to and including 0.6/1 (1.2) kV
60335.2.30:2009(AS/NZS)	Household and similar electrical appliances - Safety - Particular requirements for room heaters
60335.2.35:2004(AS/NZS)	Household and similar electrical appliances - Safety - Particular requirements for instantaneous water heaters
60598.2.2:2001(AS/NZS)	Luminaires - Particular requirements - Recessed luminaires
60598.2.22:2005(AS/NZS)	Luminaires - Particular requirements - Luminaires for emergency lighting
6104:1981(NZS)	Specification for emergency electricity supply in buildings
AS/NZS 2053	Specification for unplasticized PVC conduit and fittings for electrical wiring
AS/NZS 3085	Telecommunications installations
AS/NZS 3191	PVC insulated flexible cords
AS/NZS 3439	Electrical switchgear and controlgear
AS/NZS 60227	Polyvinyl chloride insulated cables of rated voltages up to and including 450/750 V - Flexible cables (cords)
AS/NZS 60898	Electrical accessories - Circuit-breakers for overcurrent protection for household and similar installations - Circuit-breakers for a.c. and d.c. operation
AS/NZS 61009	Residual current operated circuitbreakers with integral overcurrent protection for household and similar uses (RCBOs)
NZECP 54	Recessed luminaires

15.3 Workmanship

15.3.1 General

Supply and install all materials, including all necessary minor and incidental items, for proper completion of all of the electrical services specified or shown on the drawings. The contract will not be deemed to be complete until the Electrician has provided an Electrical Certificate of Compliance in accordance with NZECP 11 (made available to the Contractor in time for the Code Compliance Certificate application).

Obtain all necessary permits and consents, serve all notices and pay all fees in and customary charges connection with the works.

The position of switches, light and power outlets and other fittings, although shown specifically in some instances, are in general only shown diagrammatically. The exact location of each of these items will be as directed on site by the Customer; the Electrician shall give reasonable notice of when this information is required. Items positioned in contravention of this shall be repositioned if directed, including rewiring if necessary, all at the Electrician's expense.

Unless drawn (on 1:20 wall elevations) or specified otherwise the mounting height to the centreline of the following items above the floor shall be:

-1000mm for lighting switches;
-2000mm for wall mounted lights;
-2100mm for the bayonet of pendant lights;
-300mm for power points, except at benches.

(Notify the Customer if either the actual fitting or mounting position seem to make the mounting height noted above inappropriate).

Warranty cards and manufacturers guarantees for items supplied and installed by this trade shall be filled in correctly and handed over at Practical Completion. Arrange all circuits to obtain an optimum balance of the system, and check and reconnect where necessary to achieve this on completion. Leave the works clean and tidy and in full operational order.

15.3.2 Co-operation

Co-operate with all other trades and attend upon the Concretor and Carpenter to set out all required penetrations and to ensure that all wiring and fittings are correctly incorporated as work proceeds. The Carpenter will provide and fix all necessary dwangs and timber supports in locations determined by the Electrician.

15.3.3 Workmanship

All electrical work shall be carried out by, or under the direct control of, registered tradesmen, and shall be to recognized high standards. All work shall be such as to leave a neat, efficient and robust installation. Neatly label switchboards to identify each circuit.

The cutting away and checking of timbers shall be limited to such dimensions as will not prejudice the purpose for which the timber is used; observe NZS 3604: 2011 restrictions on the holing and checking of joists and beams. Chasing and checking of other materials shall be only to approval.

Adequately protect all surfaces. Any damage to fittings or surfaces made good by the appropriate trade at the Electrician's expense.

15.3.4 Wiring

Joints within cable runs will not normally be accepted. TPS cable shall be adequately supported, and clipped at regular intervals. At terminations all strands of conductors shall be fully secured in a terminal block or clamped under a screw head washer; do not cut away any strands. Wiring which terminates in enclosed fittings and/or where subject to heat liable to cause deterioration, shall be high temperature type, with the tails made off with heat resisting sleeves, to protect the permanent wiring.

Wire lights in 1.5mm 3 core - 7.5 amps loading max per circuit (allow for 100w to all light fittings unless identified otherwise).
Wire power outlets in 2.5mm 3 core - 7 maximum GPO singles or doubles per circuit. Assess power outlets for specific equipment and allow accordingly.

Conceal all wiring except as noted on drawings or below. All wiring cast into concrete shall be run in conduit pipes. All cables shall be stranded (single core is unacceptable).

Wire more or less parallel to and at right angles to the structural elements - avoid any diagonal wiring. Layout of the principal distribution wiring shall be to approval. Position all wires to minimise the risk of damage from subsequent nailing of linings etc.

Generally, do not run TPS horizontally within timber walls except in the area up to 300mm above floor. Wire in the ceiling framing and drop vertically to outlets and switches.

Wire exterior lighting in screened cable.

15.4 Systems

15.4.1 Earth

Provide a driven main earth suitable for the full installation, close to the meterboard, complying fully with all appropriate regulations and to the complete approval of a certified inspector. Bond all exposed metals, including light fittings and piped services and provide earth conductors for the entire system. Sheathing to any neutral screened cables may be used for earthing.

15.4.2 Mains

Install a neutral screened 16mm main cable underground (depth, cover/protection, backfilling, signal strip etc. to comply with all relevant regulations) from the grid connection position noted on the Site Plan along the route indicated to the meterboard, positioned where shown on the Floor Plan, and make appropriate arrangements for the grid connection. Install pilot as required. The meterboard shall be metalclad with a meter reading window, recessed maximum depth into the wall and at 2m to

the top of the board, with the meters and water heater controllers by the supply company nominated by the Principal. Install all switches and fuses that are necessary. From the meterboard run (route to approval) a neutral screened 16mm main plus controllers etc. to the switchboard.

15.5 Materials & Control

15.5.1 Materials

All materials delivered with packaging and labeling intact. All required incidentals (insulating tape, seals, fixings, etc.) shall be completely appropriate for the application involved. The use of items damaged in any way is subject to approval in each instance.

15.5.2 Switchboard

The switchboard shall be an appropriate size standard PDL DBF series board installed fully recessed where shown and at 2m to the top of the board. Install appropriate sized MCB's for all circuits, including a minimum of two power and one lighting RCDs as required to cover all outlets.

15.6 Elements

15.6.1 Appliances

Supply the following appliances:

-Wall oven
-Rangehood exhaust system complete with hard ducting to the exterior
-Wet area exhaust fans
-Heated towel rails
-Fridge

Install these items all exactly in accordance with the manufacturers instructions, and protect them until Practical Completion.

15.6.2 Light Fittings

Allow the Net Sum of $xxx for the supply only of selected lights. Take delivery, install in accordance with any directions supplied, and protect until Practical Completion.

15.6.3 Tele Communications

Workmanship shall be recognised best trade practice, and in accordance with the manufacturers' recommendations. All work shall be by competent and experienced operatives.

15.6.4 Other Wired Services

Co-operate with all other trades to ensure that the following services are installed complete and in accordance with their manufacturer's recommendations with all normal or necessary incidentals and with all wiring concealed.

-SKY TV.
-Stereo Unit.

-Garage door operating mechanisms.
-Gas hot water supply unit installed complete by the Plumber - supply electrical feed and connect.
-Wall mounted fan heaters.
-Front door bell as noted - supply and install.
-Kitchen, laundry and wet areas air exhaust fans and ducting as noted - supply and install.
-Infrared / movement / daylight sensor switches as noted.
-Heated towel rails to bathroom and shower room.
-Heat pump
-Supply a Heavy Duty TV Aerial (suitable for TV1, 2, and 3, Sky, and all local and community TV stations) and install on the roof ridges where directed, stayed against wind, and with all connections compatible with the roofing and waterproof. Feed to the outlets shown with the complete system exactly to aerial suppliers recommendations.
-Heating.

15.6.5 Electronic Security System

Specified here, although all aspects of this work shall be carried out by a separate contractor. The system shall include in-built anti-tamper devices, and shall comprise:

-Smoke Detectors.
-Passive infra-red detectors.
-Motion detector activated cameras.
-Primary digital pad indicating activated zone and for passcode changing, testing, checking and other control functions.
-Digital pads for access.
-Control box for zone system and incorporating a back-up battery, etc. Connect to the telephone distribution system for silent monitoring.
-110db piezo sirens.
-Polycarbonate satellite siren/strobe.
-Main bedroom panic button.
-A proposal for a Testing Contract for regular maintenance complying with NZS 4301.
-Digital video recorder, Dedicated Micron or equal, also located in the foyer cupboard, complete with a 30 cm flat panel monitor.

Porirua City Council
Approved Consent Document
24 NOV 2017
0560/17
BCA Number
David Nolan
On behalf of Porirua City Council

VELUX®

USA: VELUX America Inc.
1-800-88-VELUX

CDN: VELUX Canada Inc.
1 800 88-VELUX (888-3589)

www.velux.com

INSTALLATION INSTRUCTIONS FOR RIGID SUN TUNNEL TDR. ©2011, 2013 VELUX GROUP. ®VELUX AND THE VELUX LOGO ARE REGISTERED TRADEMARKS USED UNDER LICENCE BY THE VELUX GROUP.
INSTRUCTIONS D'INSTALLATION DU SUN TUNNEL RIGIDE TDR. ©2011, 2013 VELUX GROUP. ®VELUX ET LE LOGO VELUX SONT DES MARQUES DE COMMERCE DÉPOSÉES ET EMPLOYÉES SOUS LICENCE DE VELUX GROUP

Sheet Index	
Layout ID	**Layout Name**
A1-01	SITE PLAN
A1-02	SUBFLOOR PLAN
A1-03	FOUNDATION PLAN
A1-04	PROPOSED LOWER FLOOR
A1-05	PROPOSED UPPER FLOOR
A1-06	PLUMBING PLAN
A1-07	ROOF FRAMING
A1-08	ROOF PLAN
A1-09	SECTION AA
A1-10	SECTION BB
A1-11	SECTION CC
A1-12	SECTION DD
A1-13	SECTION EE
A1-14	ELEVATIONS
A1-15	ELEVATIONS
A1-16	FLOOR PLANS
A1-17	WINDOW SCHEDULE
A1-18	DOOR SCHEDULE
A1-19	INTERIOR DOOR SCHEDULE
A1-20	DETAILS
A1-21	DETAILS
A1-22	DETAILS
A1-23	DETAILS
A1-24	BRACING DETAILS
A1-25	BRACING DETAILS
A1-26	LINTEL DETAILS
A1-27	SKYLIGHT
A1-28	ENGINEERING
A1-29	ENGINEERING
A1-30	ENGINEERING
A1-31	ENGINEERING

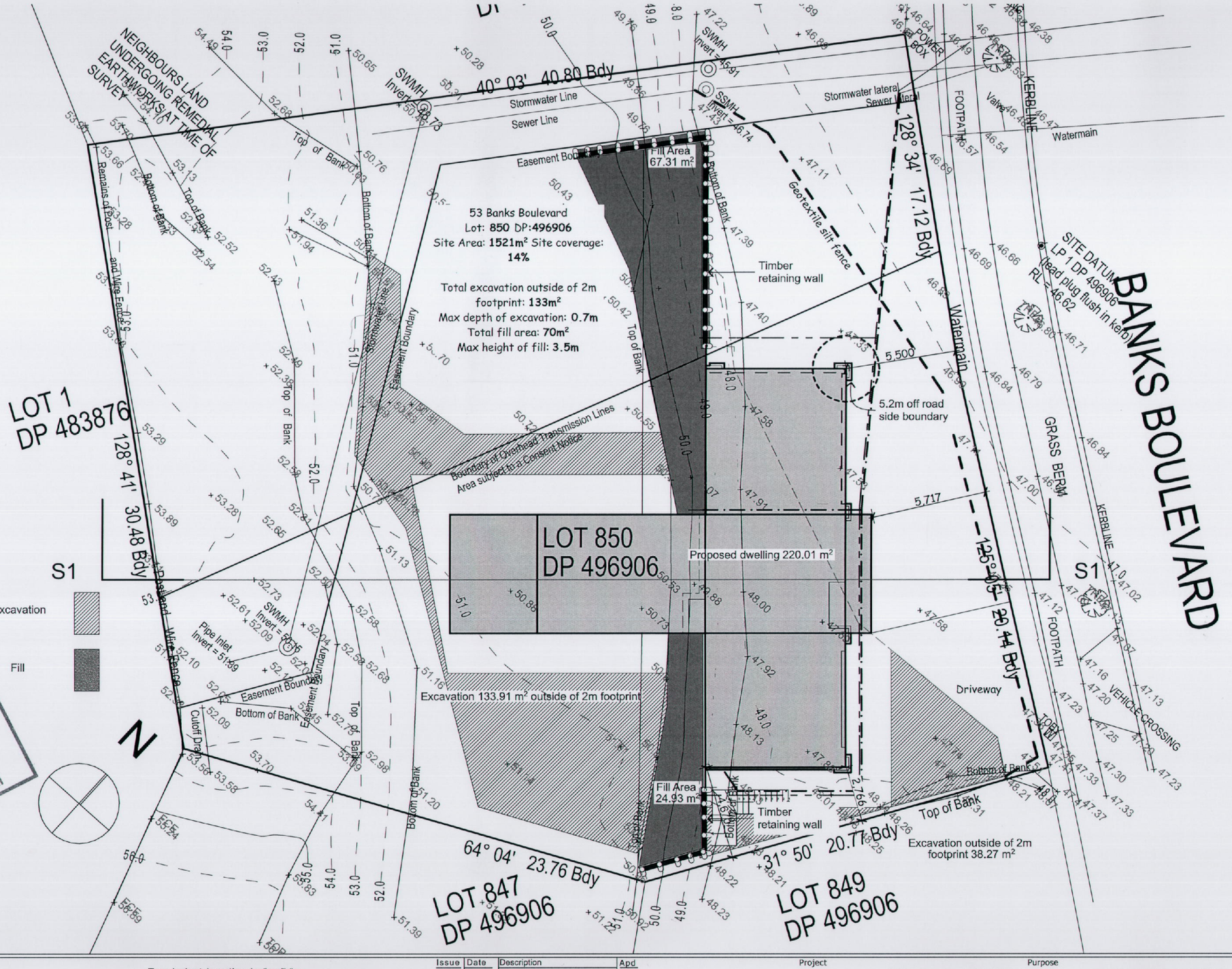

Porirua City Council
Approved Consent Document
24 NOV 2017
0560/17
BCA Number
David Nolan
On behalf of Porirua City Council

Aartra
Design and Draughting

Aaran Judd B.Des (Int)
583 Paremata Haywards Road, RD1 Porirua, 5381
P 2377 919 F 2377 920 M 027 2345 672
LBP 108509

These drawings to be read in conjunction with the specification.
Use figured dimensions only.
Contractor to verify all dimensions prior to commencement of work.
Any doubt, ambiguity or omission of any part of the drawing or the specifications shall be referred to the designer for clarification prior to commencement of work.
Submit shop drawings of all assemblies for review prior to manufacture

Issue	Date	Description	Apd

Project
TIMMINS HOUSE
ROPOSED NEW DWELLING
53 BANKS BOULEVARD
WHITBY

Dwg Title
SITE PLAN

Purpose
BUILDING CONSENT

Date 19-Oct-17	Earthquake 3	Drawn A.K.J.	
Scale 1:200, 1:1	Wind - H		
Job No. 1716	Exposure C		
Dwg No. A1-01		Issue A	

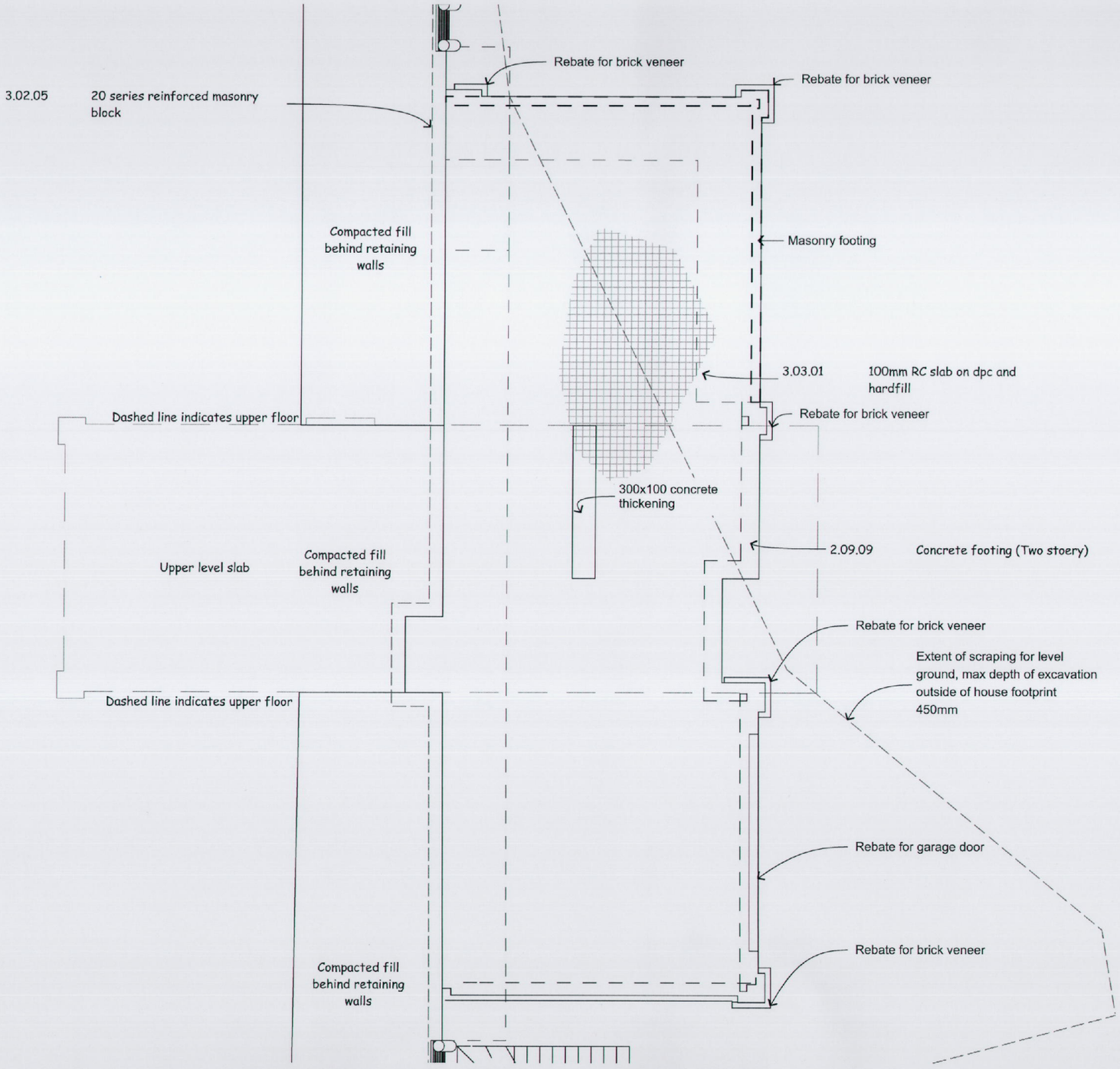

Porirua City Council
Approved Consent Document
24 NOV 2017
0560/17
BCA Number
David Nolan
On behalf of Porirua City Council

Aartra
Design and Draughting

Aaran Judd B.Des (Int)
583 Paremata Haywards Road, RD1 Porirua, 5381
P 2377 919 F 2377 920 M 027 2345 672
LBP 108509

These drawings to be read in conjunction with the specification.
Use figured dimensions only.
Contractor to verify all dimensions prior to commencement of work.
Any doubt, ambiguity or omission of any part of the drawing or the specifications shall be referred to the designer for clarification prior to commencement of work.
Submit shop drawings of all assemblies for review prior to manufacture

Issue	Date	Description	Apd

Project
TIMMINS HOUSE
ROPOSED NEW DWELLING
53 BANKS BOULEVARD
WHITBY

Dwg Title
SUBFLOOR PLAN

Purpose
BUILDING CONSENT

Date 19-Oct-17	Earthquake 3	Drawn A.K.J.	
Scale 1:100	Wind - H		
Job No. 1716	Exposure C		
Dwg No. A1-02		Issue A	

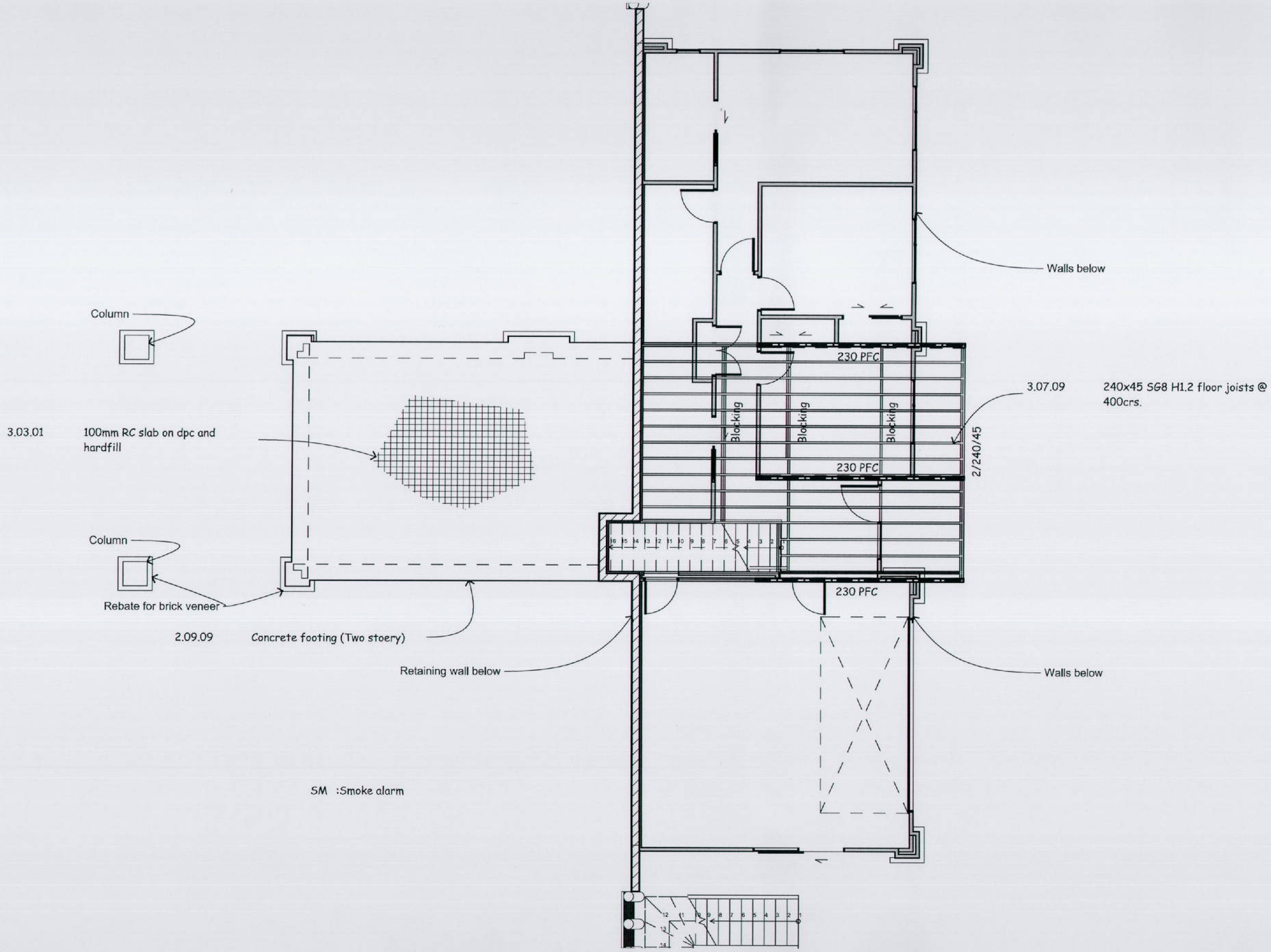

Notes

2 Site

2.09.09 **Concrete footing (Two stoery)**
240 Wide concrete footing 300 deep into solid ground. 1D12 to top, 2D12 to bottom, R10 starters @ 600crs.

3 Structure

3.03.01 **100mm RC slab on dpc and hardfill**
100mm thick reinforced in-situ slab on grade with 500E mesh, on damp-proof membrane (250 micron), over sand blinding or 50mm site concrete and 75min compacted granular fill. 20MPa concrete

3.07.09 **240x45 SG8 H1.2 floor joists @ 400crs.**
240x45 SG8 H1.2 floor joists @ 400crs.

Porirua City Council
Approved Consent Document
24 NOV 2017
0560/17
BCA Number
David Nolan
On behalf of Porirua City Council

Aartra
Design and Draughting

Aaran Judd B.Des (Int)
583 Paremata Haywards Road, RD1 Porirua, 5381
P 2377 919 F 2377 920 M 027 2345 672
LBP 108509

These drawings to be read in conjunction with the specification.
Use figured dimensions only.
Contractor to verify all dimensions prior to commencement of work.
Any doubt, ambiguity or omission of any part of the drawing or the specifications shall be referred to the designer for clarification prior to commencement of work.
Submit shop drawings of all assemblies for review prior to manufacture

Issue	Date	Description	Apd

Project
TIMMINS HOUSE
ROPOSED NEW DWELLING
53 BANKS BOULEVARD
WHITBY

Dwg Title
FOUNDATION PLAN

Purpose
BUILDING CONSENT

Date 19-Oct-17	Earthquake 3	Drawn A.K.J.	
Scale 1:100	Wind - H		
Job No. 1716	Exposure C		
Dwg No. A1-03		Issue A	

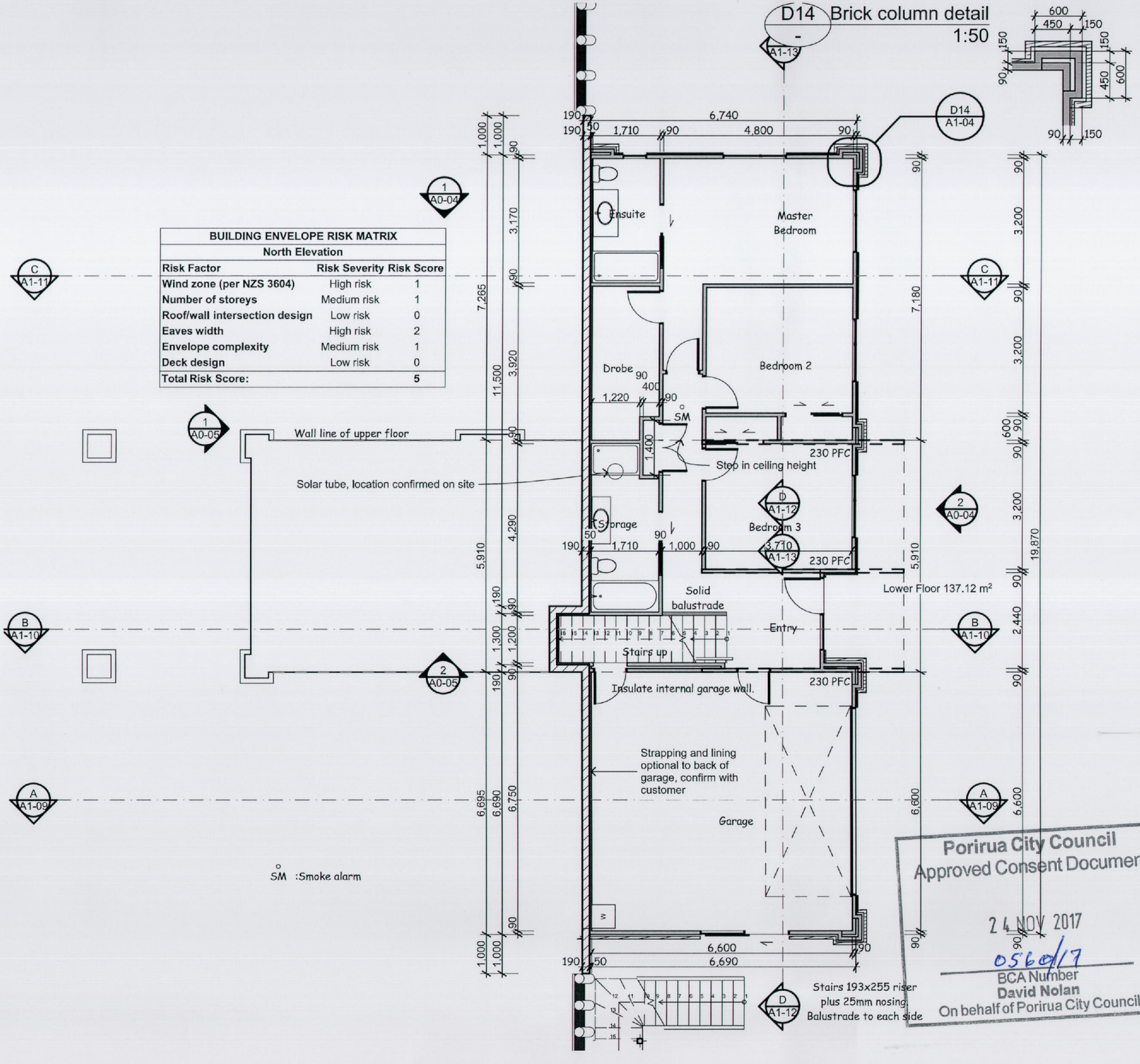

BUILDING ENVELOPE RISK MATRIX		
North Elevation		
Risk Factor	Risk Severity	Risk Score
Wind zone (per NZS 3604)	High risk	1
Number of storeys	Medium risk	1
Roof/wall intersection design	Low risk	0
Eaves width	High risk	2
Envelope complexity	Medium risk	1
Deck design	Low risk	0
Total Risk Score:		5

Porirua City Council
Approved Consent Document
24 NOV 2017
0560/17
BCA Number
David Nolan
On behalf of Porirua City Council

Notes

0 General Notes

0.05.02 Contractor notes
The contractor is to liase with the building inspectors for the required inspections. All work to comply with nzs 3604: 2011 new zealand building code, local teritorial authority and other relevant standards.building is designed for a high wind zone and outside the sea spray zone. All external fixings to be stainless steel.

2 Site

2.01.01 timber retaining walls
Timber retaining wall with 100mm dia Nova coil drain (fall to sump) wrapped in geotextile cloth, in free draining scoria.

3 Structure

3.02.03 brickwork
70 series brick veneer tied to wall framing with glav. / stainless steel brick ties as per NZS 4210. Allow for not less than 40mm wall cavity with building paper over wall framing. Allow for 75mm high by the width of the vertical mortar joint weep holes not exceeding 800mm crs. Bricks to be set on a 50mm min step x 120mm wide ledge over waterproofing membran, to comply with NZBC E2/AS1

3.02.05 20 series reinforced masonry block
20 series (200mm) reinforced masonry block. Strap with ex 50mm H1.2 battens on dpc at 600crs each way. Refer to engineers drawings for steel size and placement. Ardex Shelterseal waterproofing with protective sheeting over, with 100mm dia Nova coil drain (fall to sump) wrapped in geotextile cloth, in free draining scoria.

3.11.01 90x45 KD H1.2 internal framing
ex 90x45 KD H1.2 internal timber framing with studs @ 600crs. Nog for all fittings, fixtures, linings, bracing panels & trims. Timber floor-Fixed with 2/100x3.75 hand driven nails @ 600crs. Refer to trade literature for tie down specification where wall braces are used

3.11.02 90x45 KD H1.2 external framing enclosed walls
90x45 KD H1.2 external timber framing (enclosed walls) system. Studs @ 400crs with Thermakraft Water Gate Plus wall underlay over. Nog for all fittings, fixtures, linings, bracing panels & trims. (DPC (melthoid) between bottom plate and conc. slab and fixed with M12 trubolts at 900mm crs. Timber Floors - Fixed with 2/100x3.75 hand driven nails @ 600crs. Refer to trade literature for tie down specification where wall braces are used. R2.6 insulating batts to all external wall framing.

4 Enclosure

4.05.13 Timber weatherboards
Timber bevel beack weatherboards (direct fixed) over Water Gate Plus wall underlay . During installation seal all cuts with primer. Apply min 2 top coats of 100% acrylic timber house paint to finish the weatherboards.

Purpose: BUILDING CONSENT

Project: TIMMINS HOUSE
ROPOSED NEW DWELLING
53 BANKS BOULEVARD WHITBY

Dwg Title: PROPOSED LOWER FLOOR

Date	19-Oct-17	Earthquake	3	Drawn	A.K.J.
Scale	1:100, 1:50	Wind	-	H	-
Job No.	1716	Exposure	C		
Dwg No.	A1-04			Issue	A

Issue	Date	Description	Apd

These drawings to be read in conjunction with the specification.
Use figured dimensions only.
Contractor to verify all dimensions prior to commencement of work.
Any doubt, ambiguity or omission of any part of the drawing or the specifications shall be referred to the designer for clarification prior to commencement of work.
Submit shop drawings of all assemblies for review prior to manufacture

Aartra
Design and Draughting
Aaran Judd B.Des (Int)
583 Haywards Hill Road, RD1, Porirua, 5381
P 04 2377 919 F 04 2377 920 M 027 2345 672
BP 108509

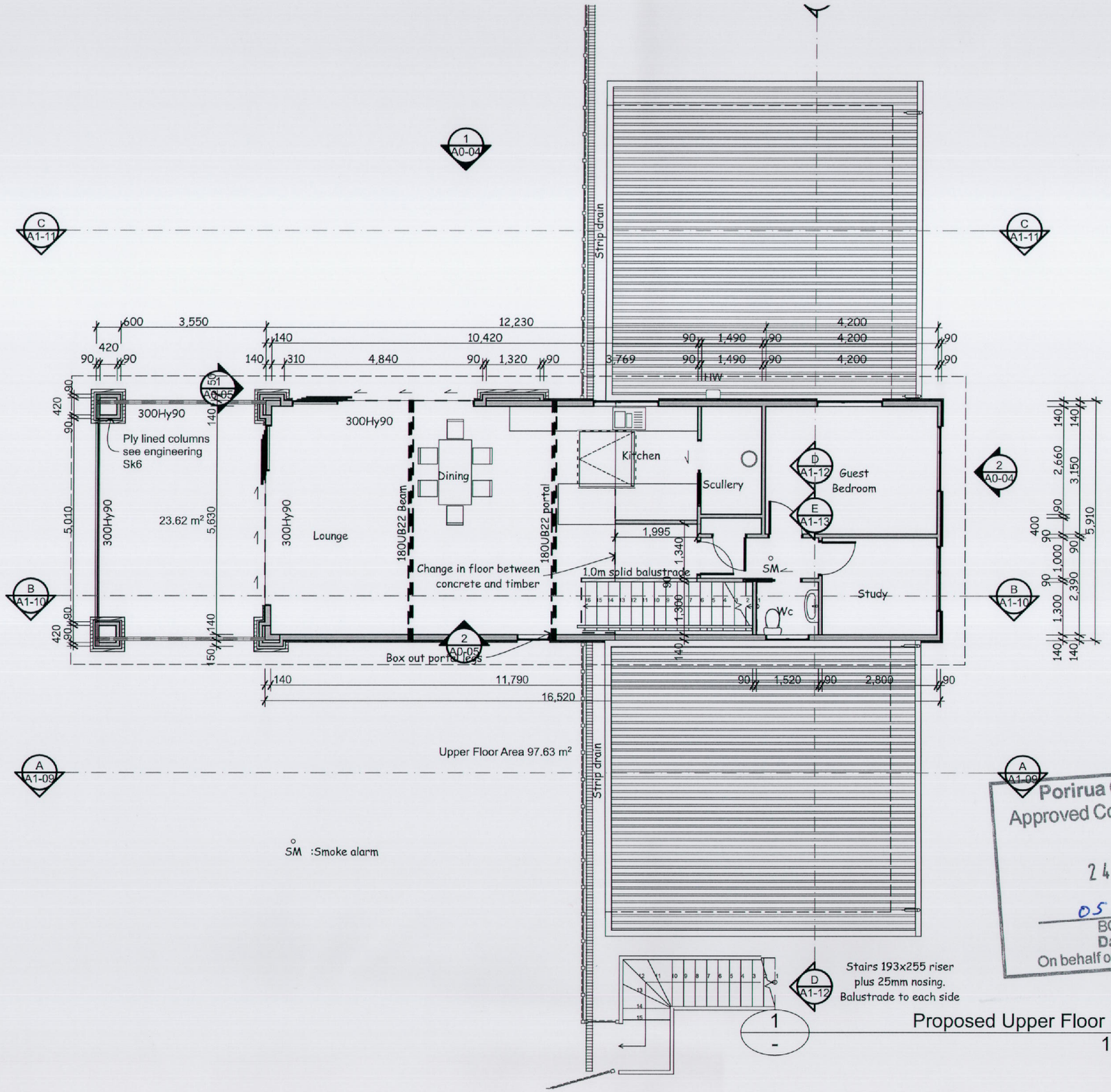

Porirua City Council
Approved Consent Document
24 NOV 2017
0560/17
BCA Number
David Nolan
On behalf of Porirua City Council

Purpose: BUILDING CONSENT

Project: TIMMINS HOUSE
ROPOSED NEW DWELLING
53 BANKS BOULEVARD WHITBY

Dwg Title: PROPOSED UPPER FLOOR

Date	19-Oct-17	Earthquake	3
Drawn	A.K.J.	Scale	1:100
Wind	-	H	-
Job No.	1716	Exposure	C
Dwg No.	A1-05	Issue	A

Issue	Date	Description	Apd

These drawings to be read in conjunction with the specification.
Use figured dimensions only.
Contractor to verify all dimensions prior to commencement of work.
Any doubt, ambiguity or omission of any part of the drawing or the specifications shall be referred to the designer for clarification prior to commencement of work.
Submit shop drawings of all assemblies for review prior to manufacture

Aartra
Design and Draughting
Aaran Judd B.Des (Int)
583 Haywards Hill Road, RD1, Porirua, 5381
P 04 2377 919 F 04 2377 920 M 027 2345 672
BP 108509

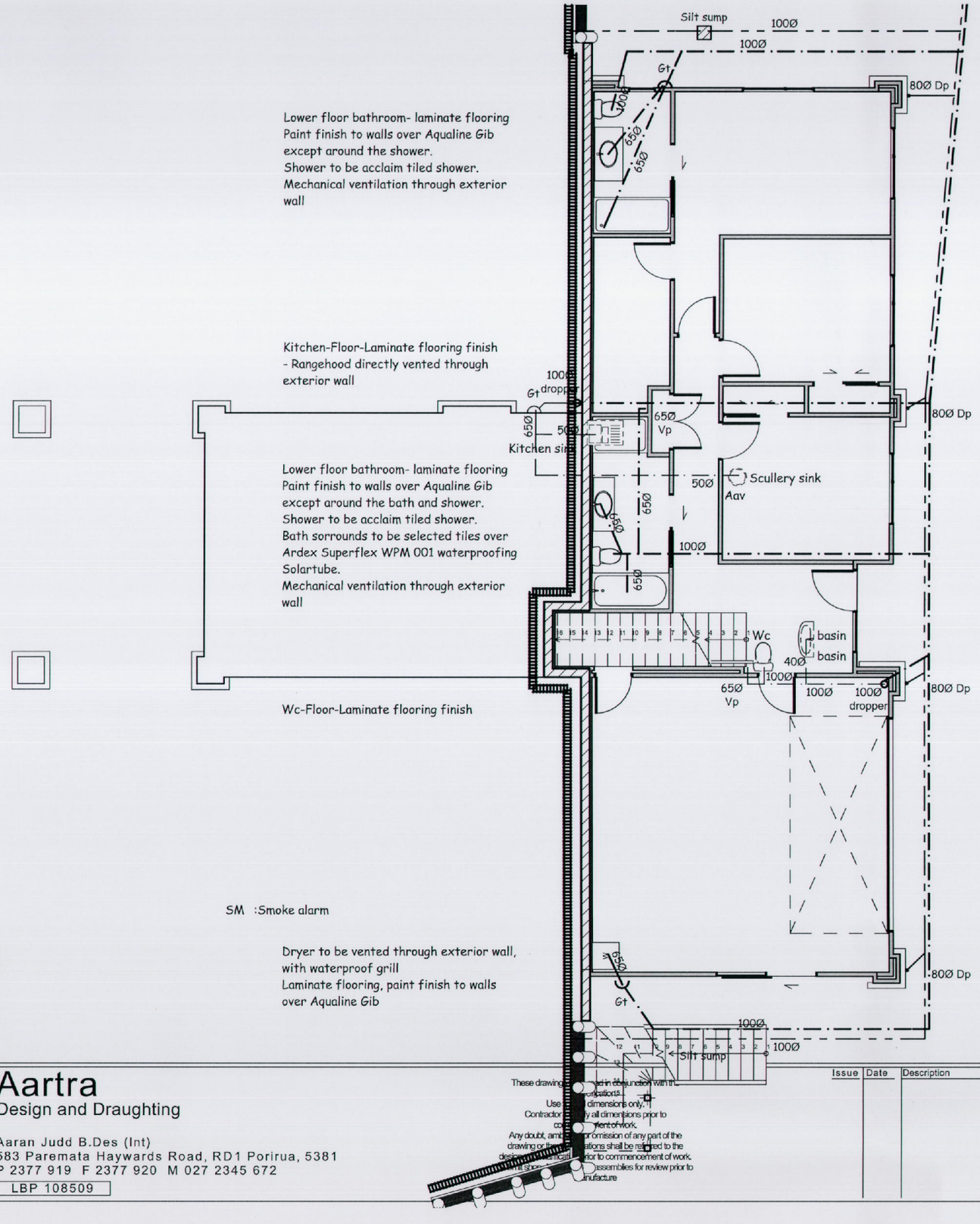

Notes

7 Services

7.01.01 General Drainage and Services notes (Part 1)
Locate existing power, water, telephone and sanitary drainage services. Allow to inform network operators as necessary. Comply with all relevant provisions and recommendations of the New Zealand Building Code, AS.NZS 3500.2:2003 and related codes, and with relevant product manufacturers recommendations.Carry out all required works to leave the water, waste and vent systems serving the plumbing fittings shown on the drawings in correct working order complete with all ancillary systems (floor drains, overflows, relief valves, etc.) required, and complete with all normal incidentals customarily installed by this trade.Comply with TA By-laws and other Regulations as required. Obtain all necessary permits and consents serve all notices, arrange all tests, and pay all fees and-customary charges. Co-operate with and attend upon all other trades to set out positions of all pipe runs, etc. to ensure the plumbing items are correctly incorporated as the works proceed.

7.01.02 General Drainage and Services notes (Part 2)
All work shall be carried out by, or under the direct control of, properly qualified tradesmen, and shall be to recognised high standards. Adequately protect all surfaces. Any damage to fittings or surfaces shall be made good by the appropriate trade at the Plumber's expense. The cutting away and checking of timbers shall be limited to such dimensions as will not prejudice the purpose of the timber. Permanently weatherseal wherever pipes, screws, bolts or other fastenings penetrate an external surface, and particularly roofing; seal with gaskets, flashings (and over flashings if necessary) or mastics as appropriate.

7.01.03 General Drainage and Services notes (Part 3)
All pipework shall be concealed except where specifically approved. Arrange all pipework (and particularly traps) in a manner that will allow for maximum future accessibility for repairs or maintenance. Where pipes are covered with nail fixed linings and trim mark the positions on the linings to minimise risk of subsequent nailings penetrating. Set out all pipework in straight runs to even gradients. Polybutylene pipework shall be arranged and fixed so that all joints are in a fully 'relaxed' condition, without any stress. Hosecocks always supplied from highest pressure in the system.All materials shall be delivered with the packaging and labelling intact. Incidentals (jointing products, PTFE tape, seals, washers, solvent cements, fixings, etc.) shall all be completely appropriate for the application involved.

7.01.04 General Drainage and Services notes (Part 4)
Separate dissimilar metals in circumstances that could produce electrolytic action. Pipes in contact with or built into concrete to be fully spiral wrapped in Denso tape. Respect in full all probable thermal movements - layouts, fixings and jointings shall be arranged to allow for full thermal movement without risk of prejudice to watertight conditions, or risk of damage from straining to pipes which will generate failures. Plumbing services completed in stages which allow for proper testing under normal working pressures prior to concealment or enclosure.

7.01.05 General Drainage and Services notes (Part 5)
The water heater is to be sited in accordance with the requirements of Energy Efficiency H1/AS1 Clause 5.0 Hot Water Systems. The requirements of NZS 4305 clause 3.2 Pipe – runs are stated.The developed length of pipe run allowable between the water heater and the kitchen sink outlet are as set below. Nominal pipe size 10mm 15mm 20mm. Developed length 25m 12m 7m. Hot water pipework shall be thermally insulated to comply with the requirements of Energy Efficiency H1/AS1 Clause 5.0 Hot Water Systems. All hot and cold water pipework shall be in polybutylene or copper. Where polybutylene or similar pipe is used to pipe hot water from a water heater, the water temperature shall be limited by an acceptable and approved method. Copper pipework shall be installed for hot water 1 meter to and from the hot water heater to comply with G12/AS1. Water Services shall comply with New Zealand Building Code Clause G12/AS1 Water Services. The delivered hot water temperature to be 55deg

Porirua City Council
Approved Consent Document
24 NOV 2017
0560/17
BCA Number
David Nolan
On behalf of Porirua City Council

Aartra
Design and Draughting
Aaran Judd B.Des (Int)
583 Paremata Haywards Road, RD1 Porirua, 5381
P 2377 919 F 2377 920 M 027 2345 672
LBP 108509

These drawing... in conjunction with th... specifications.
Use ... dimensions only.
Contractor ... all dimensions prior to co... ment of work.
Any doubt, ambi... or omission of any part of the drawing or ... ations shall be referred to the designer ... prior to commencement of work.
Shop drawings ... assemblies for review prior to manufacture

Issue	Date	Description	Apd

Project
TIMMINS HOUSE
ROPOSED NEW DWELLING
53 BANKS BOULEVARD
WHITBY

Dwg Title
PLUMBING PLAN

Purpose
BUILDING CONSENT

Date 19-Oct-17	Earthquake 3	Drawn A.K.J.	
Scale 1:100	Wind - H		
Job No. 1716	Exposure C		
Dwg No. A1-06		Issue A	

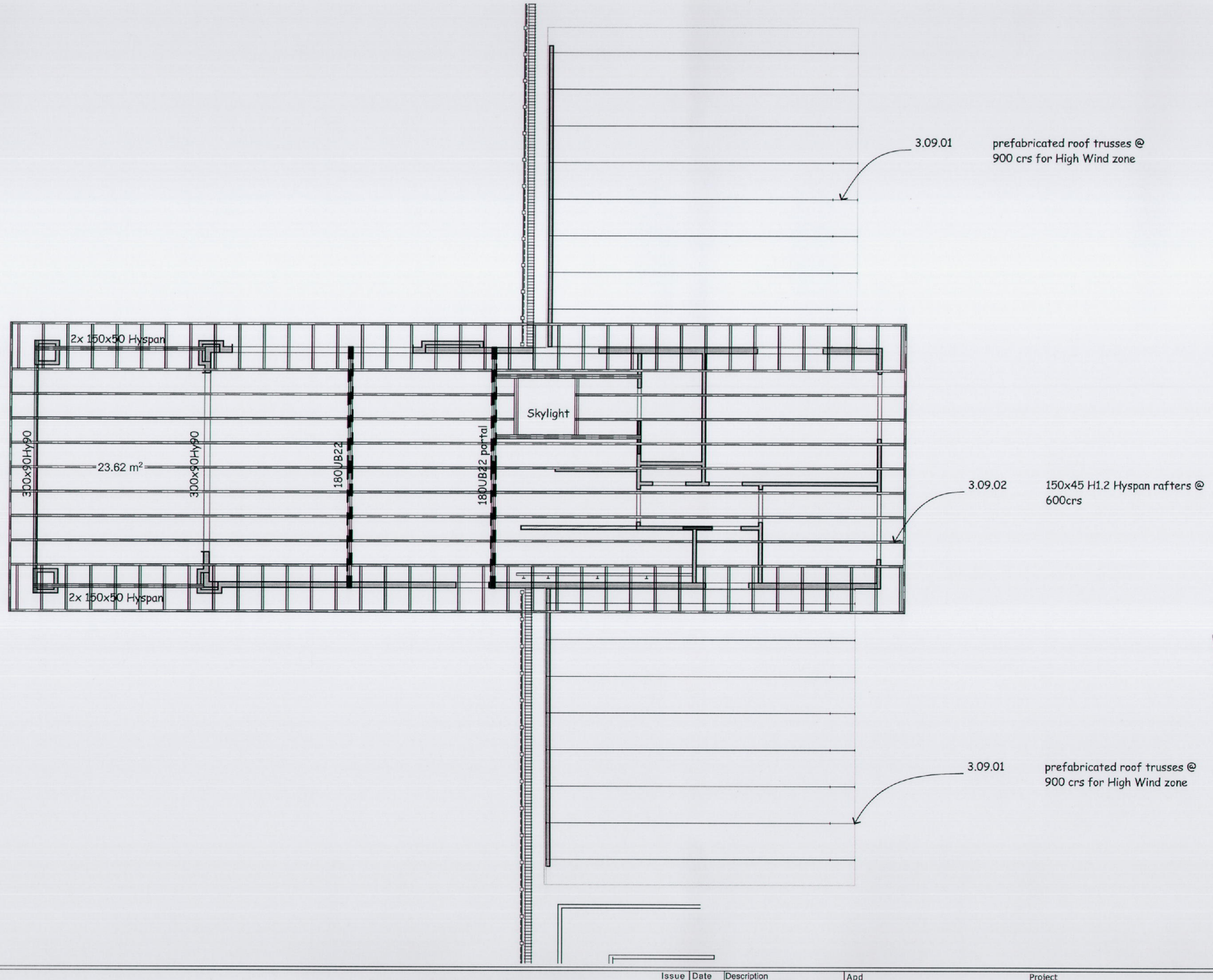

Notes

3 Structure

3.09.01 **prefabricated roof trusses @ 900 crs for High Wind zone**
prefabricated roof trusses at 900 crs to manufacturers specification. Manufacturer to supply producer statement. Allow for 20mm birds mouth. Site measure prior to fabrication to confirm pitch and size. 2/100x3.75 skewed nails + 2 wire dogs.

3.09.02 **150x45 H1.2 Hyspan rafters @ 600crs**
150x45 H1.2 Hyspan rafters @ 600crs fixed with 2/100x3.75 skewed nails + 2 wire dogs.

3.15.01 **Top Plate, Rafter and Purlin Fixing**
Top Plate to stud connection- 2/90x3.15 end nails + 2 wire dogs @ 600crs(4.7kN).
Truss/ Rafters to top plate connection - 2/90x3.15 skew nails + 2 wire dogs (4.7kN),
Purlin to rafter connection - On flat-1/10g self- drilling screw, 80mm long. (2.4kN)

Porirua City Council
Approved Consent Document
24 NOV 2017
0560/17
BCA Number
David Nolan
On behalf of Porirua City Council

Aartra
Design and Draughting

Aaran Judd B.Des (Int)
583 Paremata Haywards Road, RD1 Porirua, 5381
P 2377 919 F 2377 920 M 027 2345 672
LBP 108509

These drawings to be read in conjunction with the specification.
Use figured dimensions only.
Contractor to verify all dimensions prior to commencement of work.
Any doubt, ambiguity or omission of any part of the drawing or the specifications shall be referred to the designer for clarification prior to commencement of work.
Submit shop drawings of all assemblies for review prior to manufacture

Issue	Date	Description	Apd

Project
TIMMINS HOUSE
ROPOSED NEW DWELLING
53 BANKS BOULEVARD
WHITBY

Dwg Title
ROOF FRAMING

Purpose
BUILDING CONSENT

Date	19-Oct-17	Earthquake	3	Drawn	A.K.J.
Scale	1:100	Wind	H		
Job No.	1716	Exposure	C		
Dwg No.	A1-07			Issue	A

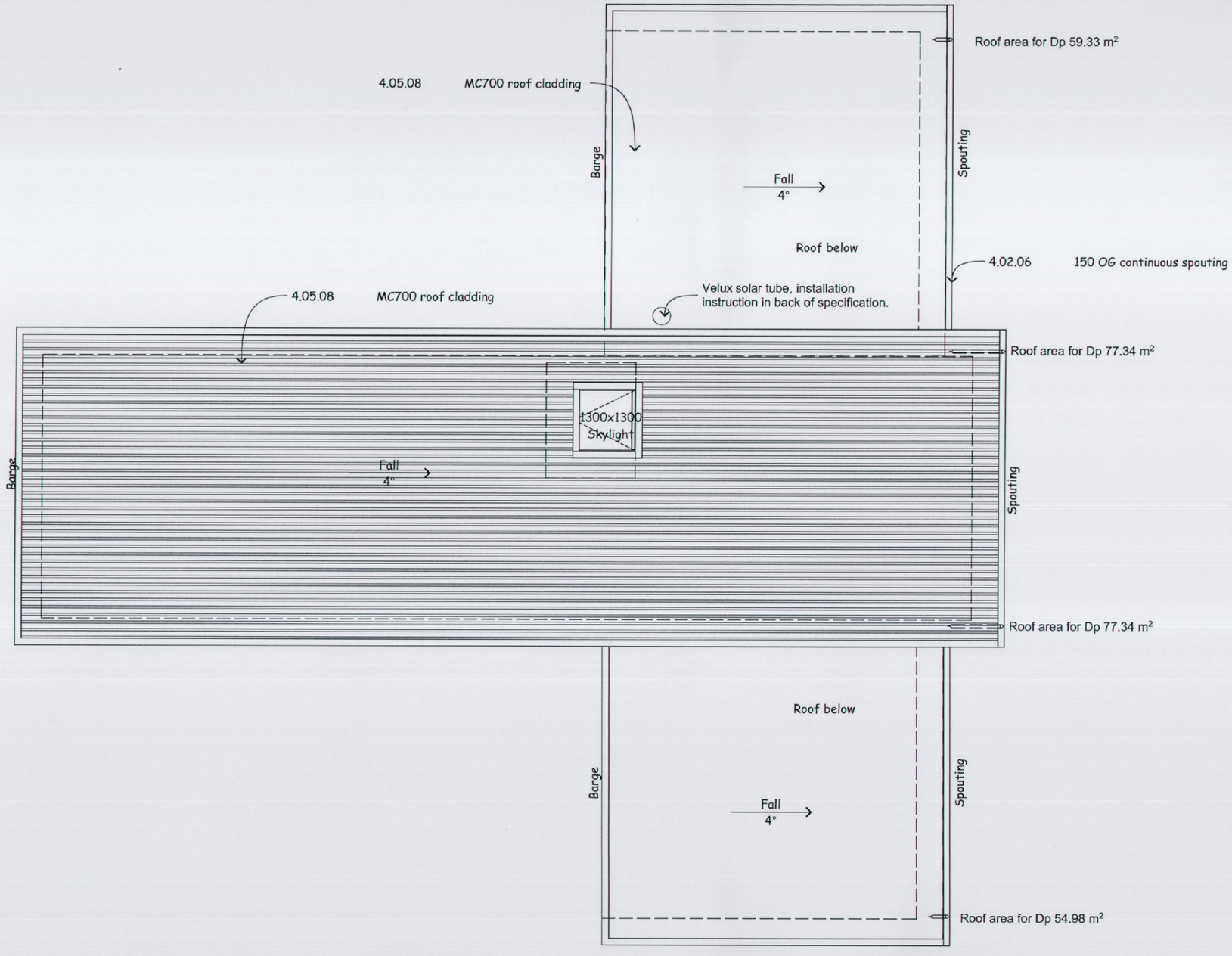

Notes

4 Enclosure

4.02.06 **150 OG continuous spouting**
150 OG continuous spouting with prefinished colorsteel Max Thunder Grey and fixed in accordance with manufacturers recommendations on ex 35 H3.1 pine fascia board - paint finish

4.05.08 **MC700 roof cladding**
MC700 COLORSTEEL MAX roofing system, on ex 75x50 H1.2 purlins at 800crs, THERMAKRAFT 215 roofing underlay and mesh.

Porirua City Council
Approved Consent Document
24 NOV 2017
0560/17
BCA Number
David Nolan
On behalf of Porirua City Council

Aartra
Design and Draughting

Aaran Judd B.Des (Int)
583 Paremata Haywards Road, RD1 Porirua, 5381
P 2377 919 F 2377 920 M 027 2345 672
LBP 108509

These drawings to be read in conjunction with the specification.
Use figured dimensions only.
Contractor to verify all dimensions prior to commencement of work.
Any doubt, ambiguity or omission of any part of the drawing or the specifications shall be referred to the designer for clarification prior to commencement of work.
Submit shop drawings of all assemblies for review prior to manufacture

Issue	Date	Description	Apd

Project
TIMMINS HOUSE
ROPOSED NEW DWELLING
53 BANKS BOULEVARD
WHITBY

Dwg Title
ROOF PLAN

Purpose
BUILDING CONSENT

Date 19-Oct-17	Earthquake 3	Drawn A.K.J.	
Scale 1:100	Wind - H		
Job No. 1716	Exposure C		
Dwg No. A1-08		Issue A	

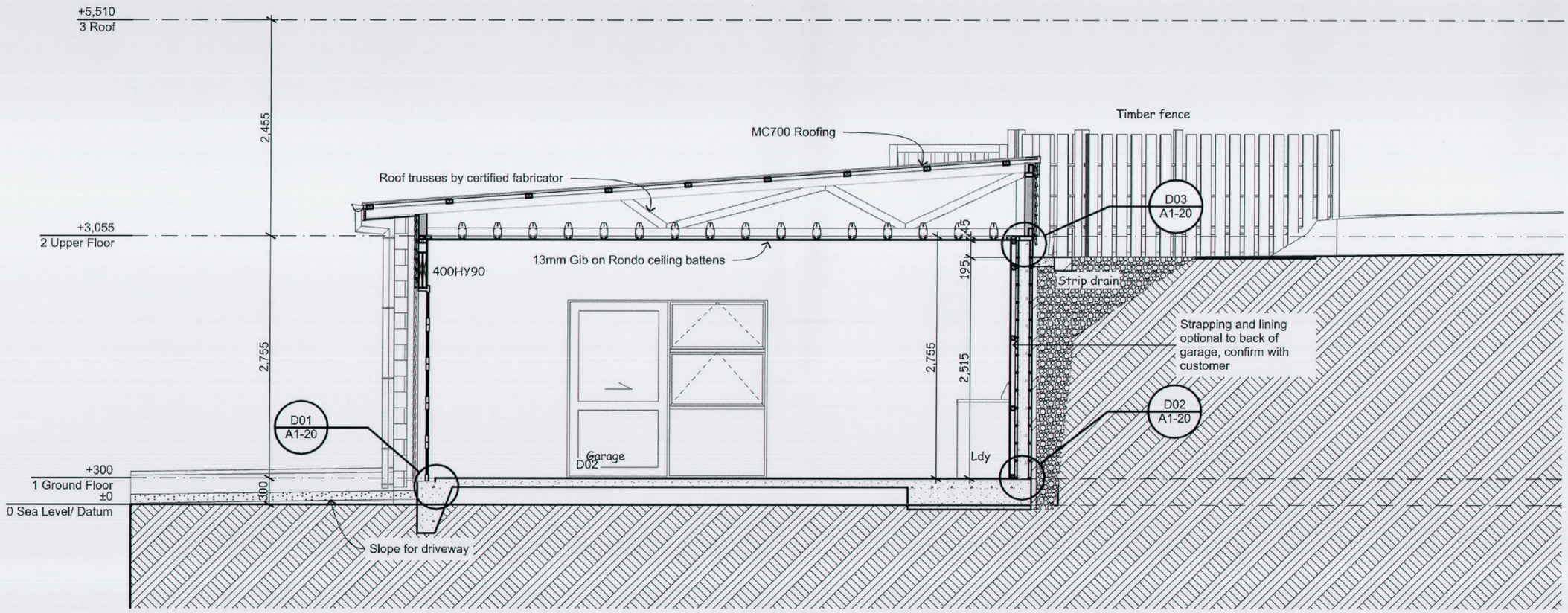

1
-

Section AA
1:50

Porirua City Council
Approved Consent Document

24 NOV 2017

0560/17
BCA Number
David Nolan
On behalf of Porirua City Council

Aartra
Design and Draughting

Aaran Judd B.Des (Int)
583 Paremata Haywards Road, RD1 Porirua, 5381
P 2377 919 F 2377 920 M 027 2345 672
LBP 108509

These drawings to be read in conjunction with the specification.
Use figured dimensions only.
Contractor to verify all dimensions prior to commencement of work.
Any doubt, ambiguity or omission of any part of the drawing or the specifications shall be referred to the designer for clarification prior to commencement of work.
Submit shop drawings of all assemblies for review prior to manufacture

Issue	Date	Description	Apd

Project
TIMMINS HOUSE
ROPOSED NEW DWELLING
53 BANKS BOULEVARD
WHITBY

Dwg Title
SECTION AA

Purpose
BUILDING CONSENT

Date 19-Oct-17	Earthquake 3	Drawn A.K.J.	
Scale 1:50	Wind - H		
Job No. 1716	Exposure C		
Dwg No. A1-09		Issue A	

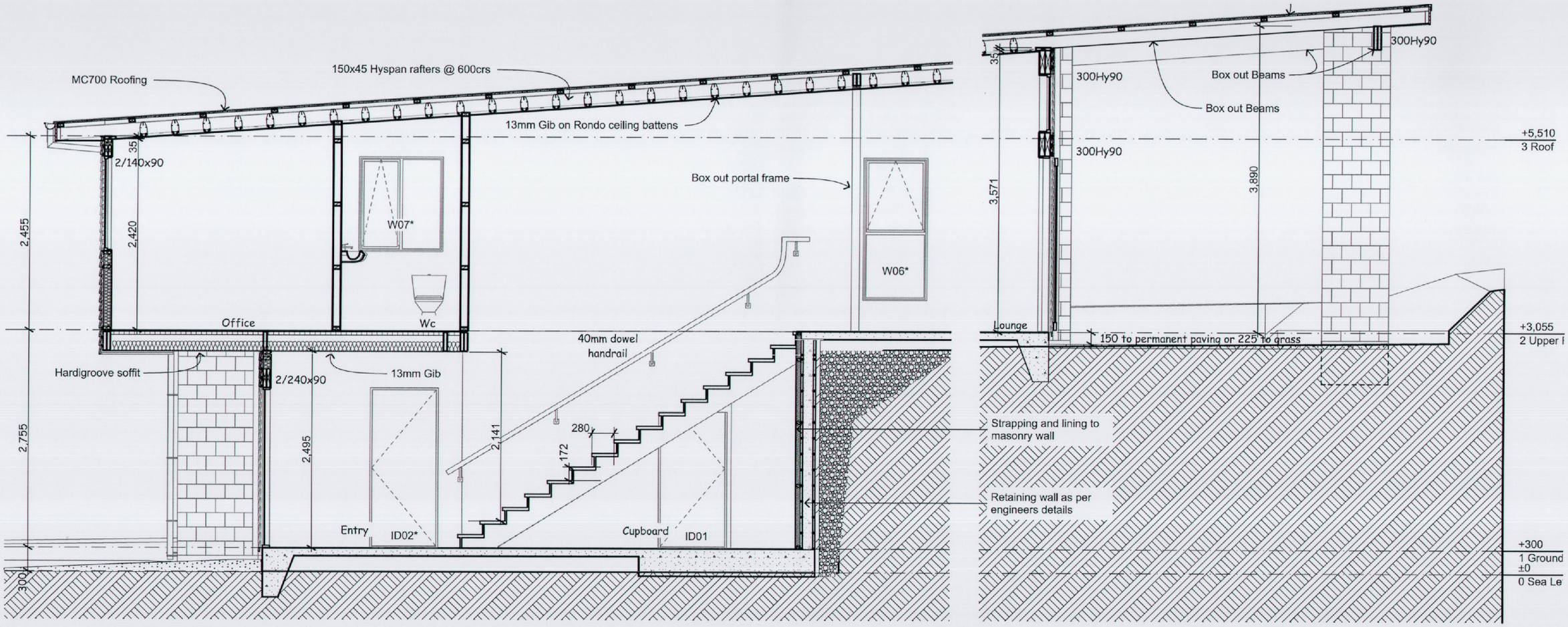

1
-

Section BB
1:50

2
-

Porirua City Council
Approved Consent Document
24 NOV 2017
0560/17
BCA Number
David Nolan
On behalf of Porirua City Council

Aartra
Design and Draughting

Aaran Judd B.Des (Int)
583 Paremata Haywards Road, RD1 Porirua, 5381
P 2377 919 F 2377 920 M 027 2345 672
LBP 108509

These drawings to be read in conjunction with the specification.
Use figured dimensions only.
Contractor to verify all dimensions prior to commencement of work.
Any doubt, ambiguity or omission of any part of the drawing or the specifications shall be referred to the designer for clarification prior to commencement of work.
Submit shop drawings of all assemblies for review prior to manufacture

Issue	Date	Description	Apd

Project
TIMMINS HOUSE
ROPOSED NEW DWELLING
53 BANKS BOULEVARD
WHITBY

Dwg Title
SECTION BB

Purpose
BUILDING CONSENT

Date 19-Oct-17	Earthquake 3	Drawn A.K.J.	
Scale 1:50	Wind - H		
Job No. 1716	Exposure C		
Dwg No. A1-10		Issue A	

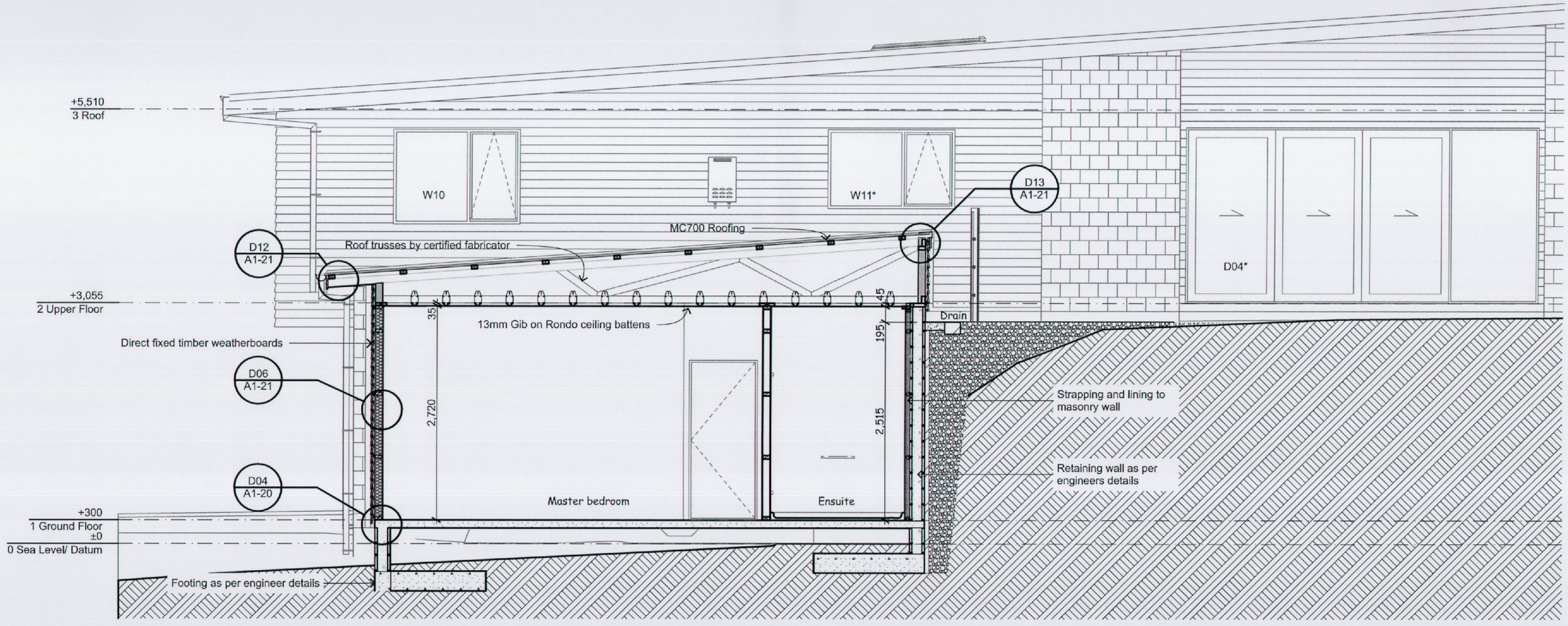

1 - Section CC
1:50

Porirua City Council
Approved Consent Document
24 NOV 2017
0560/17
BCA Number
David Nolan
On behalf of Porirua City Council

Aartra
Design and Draughting

Aaran Judd B.Des (Int)
583 Paremata Haywards Road, RD1 Porirua, 5381
P 2377 919 F 2377 920 M 027 2345 672
LBP 108509

These drawings to be read in conjunction with the specification.
Use figured dimensions only.
Contractor to verify all dimensions prior to commencement of work.
Any doubt, ambiguity or omission of any part of the drawing or the specifications shall be referred to the designer for clarification prior to commencement of work.
Submit shop drawings of all assemblies for review prior to manufacture

Issue	Date	Description	Apd

Project
TIMMINS HOUSE
ROPOSED NEW DWELLING
53 BANKS BOULEVARD
WHITBY

Dwg Title
SECTION CC

Purpose
BUILDING CONSENT

Date 19-Oct-17	Earthquake 3	Drawn A.K.J.	
Scale 1:50	Wind - H		
Job No. 1716	Exposure C		
Dwg No. A1-11		Issue A	

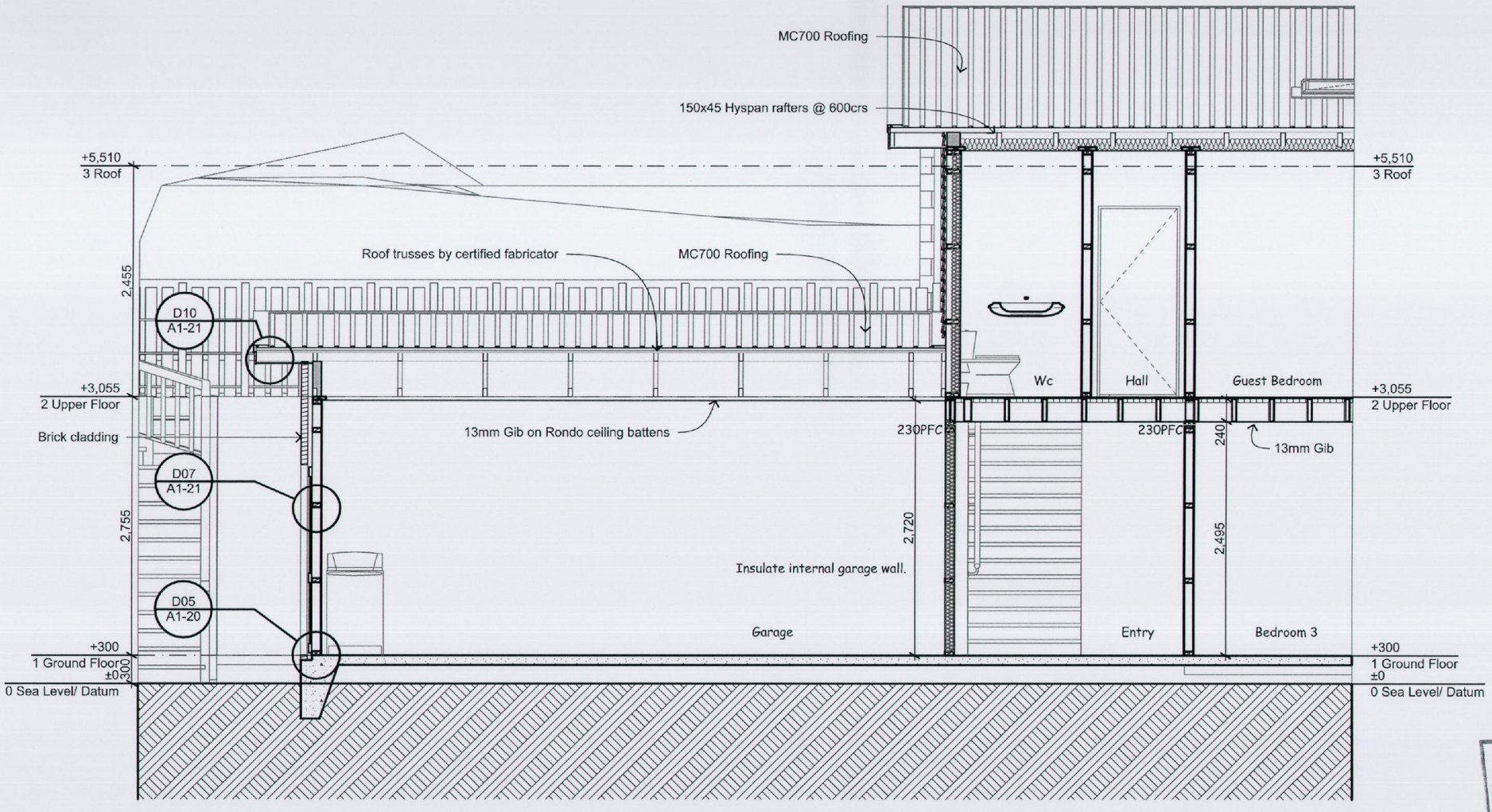

Porirua City Council
Approved Consent Document

24 NOV 2017

0560/17
BCA Number
David Nolan
On behalf of Porirua City Council

Aartra
Design and Draughting

Aaran Judd B.Des (Int)
583 Paremata Haywards Road, RD1 Porirua, 5381
P 2377 919 F 2377 920 M 027 2345 672
LBP 108509

These drawings to be read in conjunction with the specification.
Use figured dimensions only.
Contractor to verify all dimensions prior to commencement of work.
Any doubt, ambiguity or omission of any part of the drawing or the specifications shall be referred to the designer for clarification prior to commencement of work.
Submit shop drawings of all assemblies for review prior to manufacture

Issue	Date	Description	Apd

Project
TIMMINS HOUSE
ROPOSED NEW DWELLING
53 BANKS BOULEVARD
WHITBY

Dwg Title
SECTION DD

Purpose
BUILDING CONSENT

Date	19-Oct-17	Earthquake	3	Drawn	A.K.J.
Scale	1:50	Wind	- H		
Job No.	1716	Exposure	C		
Dwg No.	A1-12			Issue	A

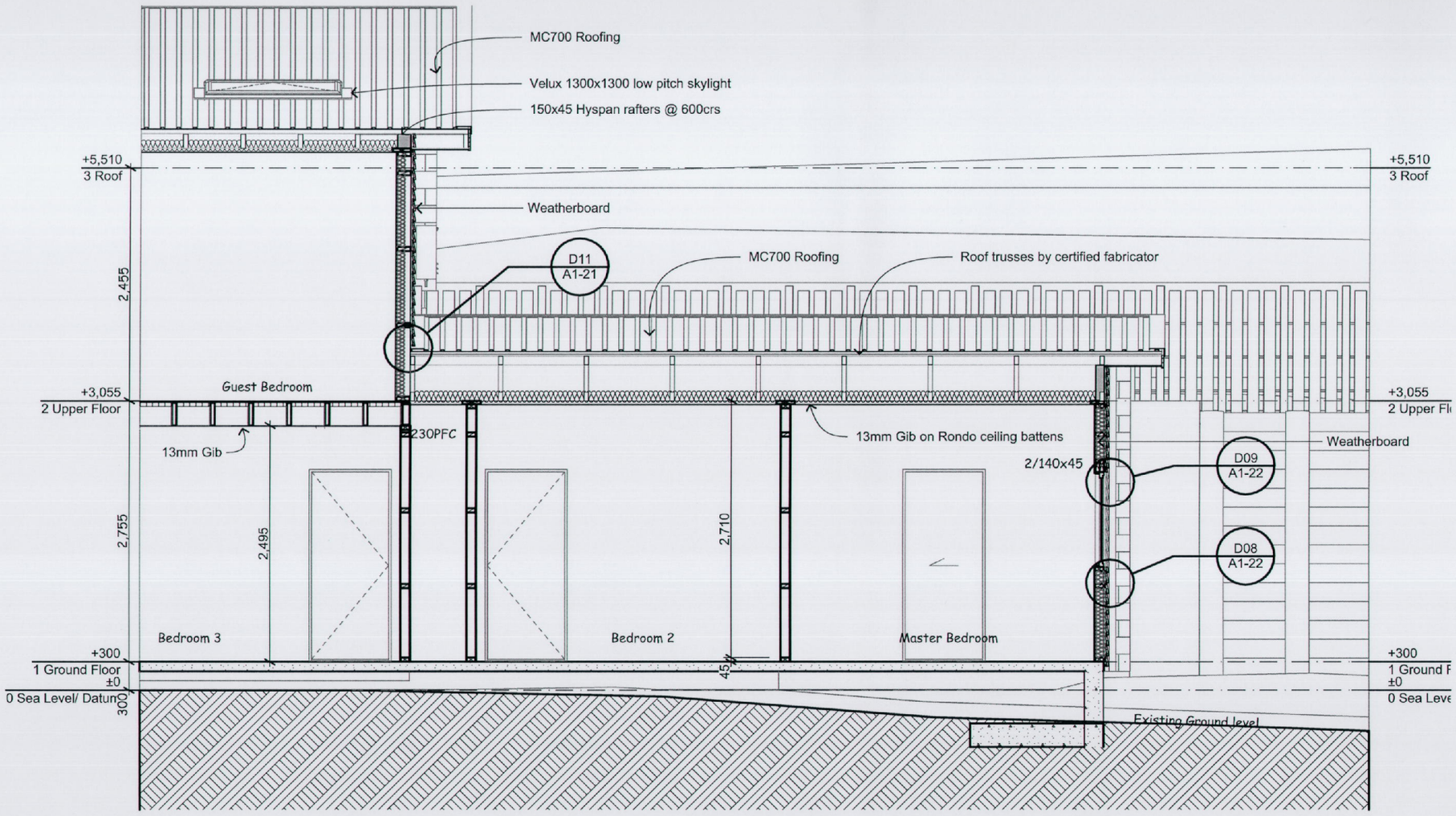

1 Section EE 1:50

Porirua City Council
Approved Consent Document
24 NOV 2017
0560/17
BCA Number
David Nolan
On behalf of Porirua City Council

Aartra
Design and Draughting

Aaran Judd B.Des (Int)
583 Paremata Haywards Road, RD1 Porirua, 5381
P 2377 919 F 2377 920 M 027 2345 672
LBP 108509

These drawings to be read in conjunction with the specification.
Use figured dimensions only.
Contractor to verify all dimensions prior to commencement of work.
Any doubt, ambiguity or omission of any part of the drawing or the specifications shall be referred to the designer for clarification prior to commencement of work.
Submit shop drawings of all assemblies for review prior to manufacture

Issue	Date	Description	Apd

Project
TIMMINS HOUSE
ROPOSED NEW DWELLING
53 BANKS BOULEVARD
WHITBY

Dwg Title
SECTION EE

Purpose
BUILDING CONSENT

Date	19-Oct-17	Earthquake	3	Drawn	A.K.J.
Scale	1:50	Wind	- H		
Job No.	1716	Exposure	C		
Dwg No.	A1-13			Issue	A

1
-

North Elevation
1:100

2
-

East Elevation
1:100

Porirua City Council
Approved Consent Document
24 NOV 2017
0560/17
BCA Number
David Nolan
On behalf of Porirua City Council

Aartra
Design and Draughting

Aaran Judd B.Des (Int)
583 Paremata Haywards Road, RD1 Porirua, 5381
P 2377 919 F 2377 920 M 027 2345 672
LBP 108509

These drawings to be read in conjunction with the specification.
Use figured dimensions only.
Contractor to verify all dimensions prior to commencement of work.
Any doubt, ambiguity or omission of any part of the drawing or the specifications shall be referred to the designer for clarification prior to commencement of work.
Submit shop drawings of all assemblies for review prior to manufacture

Issue	Date	Description	Apd

Project
TIMMINS HOUSE
ROPOSED NEW DWELLING
53 BANKS BOULEVARD
WHITBY

Dwg Title
ELEVATIONS

Purpose
BUILDING CONSENT

Date 19-Oct-17	Earthquake 3	Drawn A.K.J.	
Scale 1:100	Wind - H		
Job No. 1716	Exposure C		
Dwg No. A1-14		Issue A	

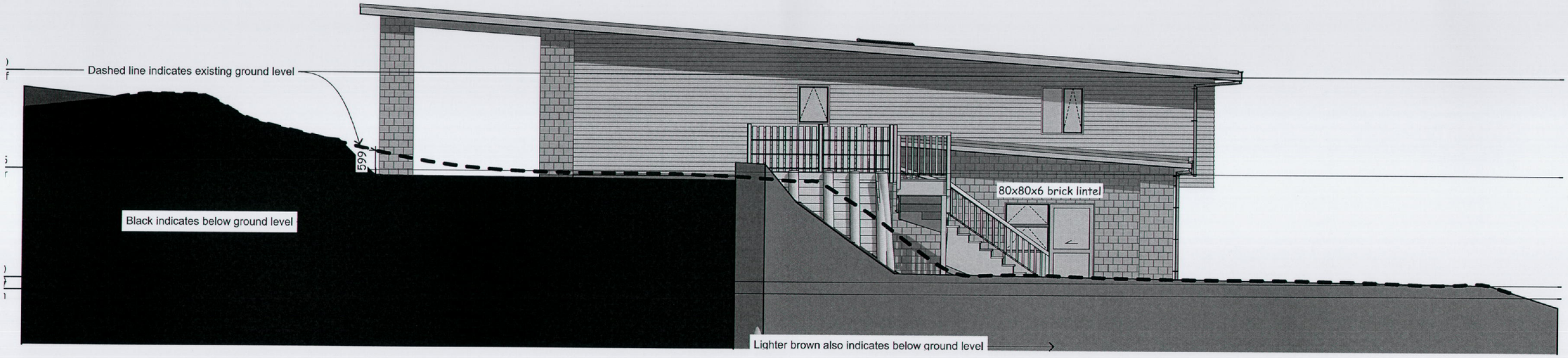

1
-

South Elevation
1:100

Porirua City Council
Approved Consent Document
24 NOV 2017
0560/17
BCA Number
David Nolan
On behalf of Porirua City Council

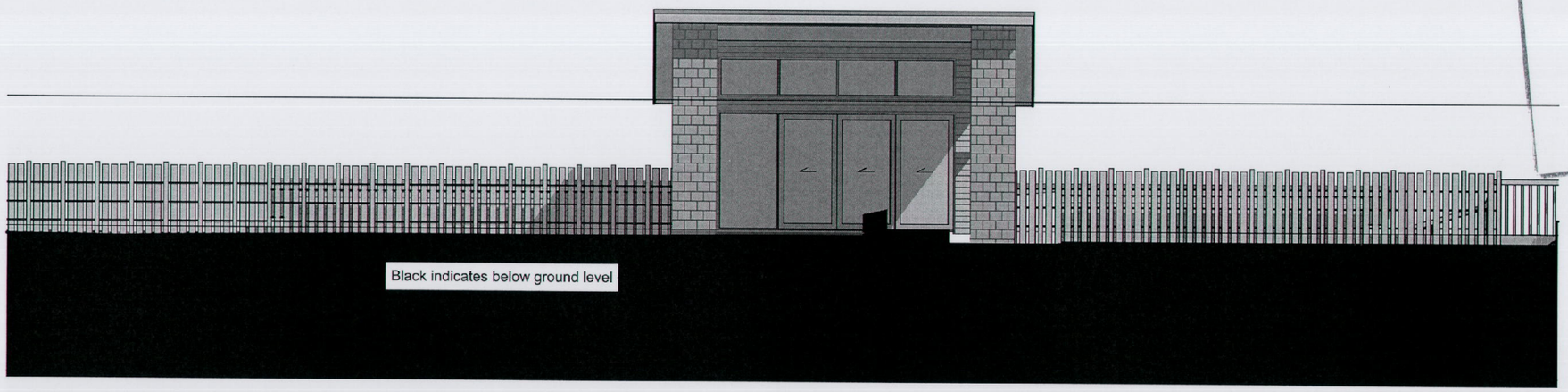

2
-

West Elevation
1:100

Aartra
Design and Draughting

Aaran Judd B.Des (Int)
583 Paremata Haywards Road, RD1 Porirua, 5381
P 2377 919 F 2377 920 M 027 2345 672
LBP 108509

These drawings to be read in conjunction with the specification.
Use figured dimensions only.
Contractor to verify all dimensions prior to commencement of work.
Any doubt, ambiguity or omission of any part of the drawing or the specifications shall be referred to the designer for clarification prior to commencement of work.
Submit shop drawings of all assemblies for review prior to manufacture

Issue	Date	Description	Apd

Project
TIMMINS HOUSE
ROPOSED NEW DWELLING
53 BANKS BOULEVARD
WHITBY

Dwg Title
ELEVATIONS

Purpose
BUILDING CONSENT

Date 19-Oct-17	Earthquake 3	Drawn A.K.J.	
Scale 1:100	Wind - H		
Job No. 1716	Exposure C		
Dwg No. A1-15		Issue A	

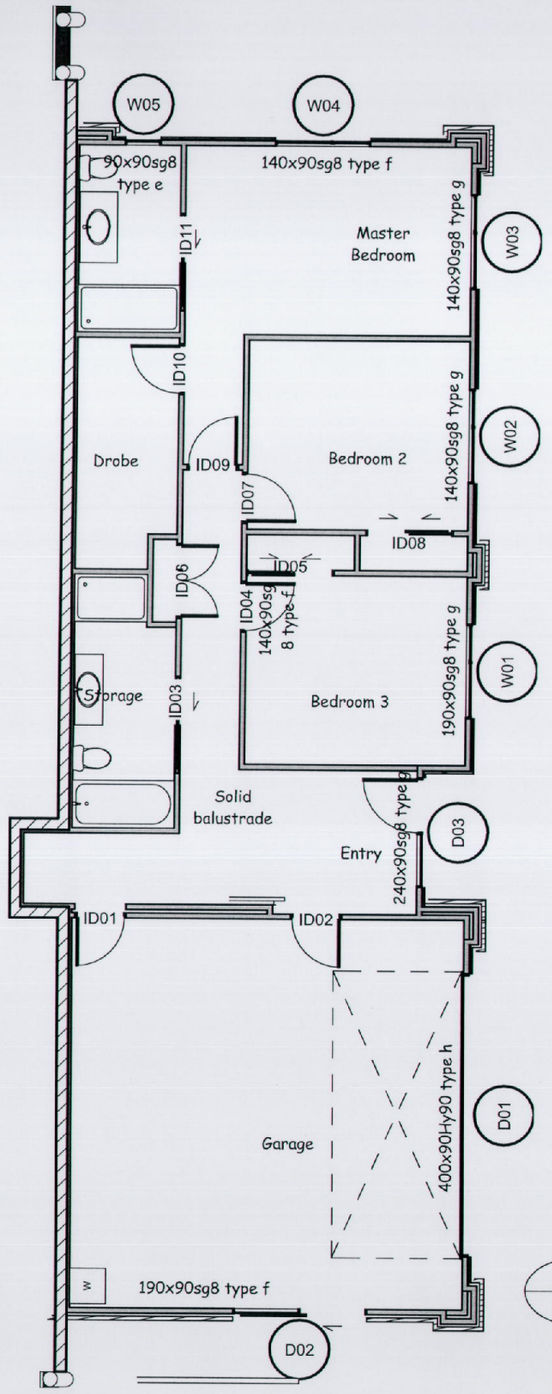

1
-
Lower Floor
1:100

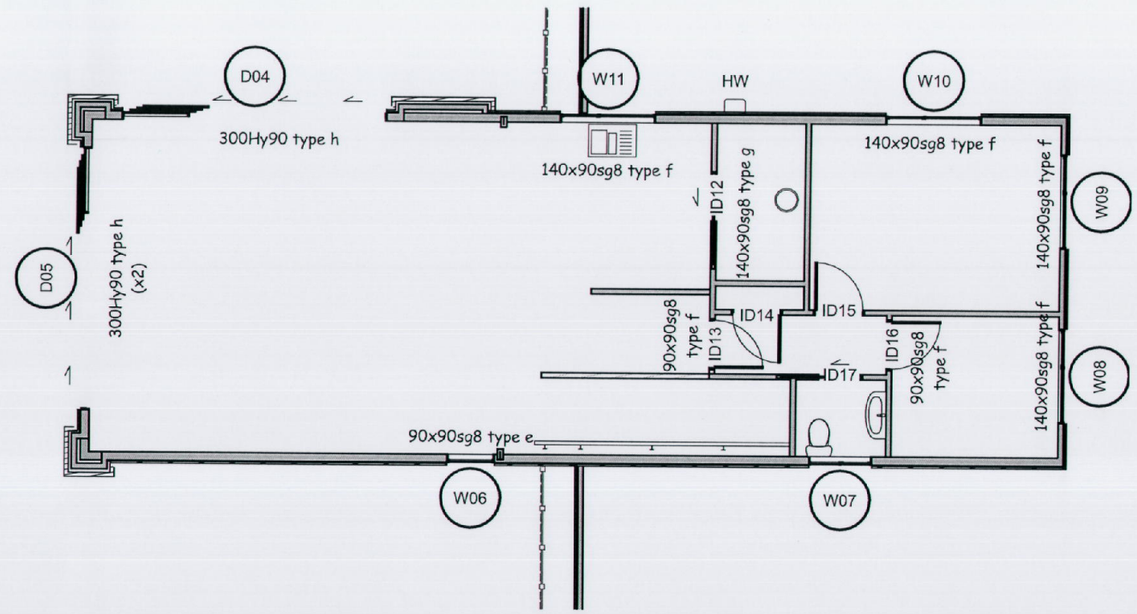

2
-
Upper Floor
1:100

Porirua City Council
Approved Consent Document
24 NOV 2017
0560/17
BCA Number
David Nolan
On behalf of Porirua City Council

Aartra
Design and Draughting

Aaran Judd B.Des (Int)
583 Paremata Haywards Road, RD1 Porirua, 5381
P 2377 919 F 2377 920 M 027 2345 672
LBP 108509

These drawings to be read in conjunction with the specification.
Use figured dimensions only.
Contractor to verify all dimensions prior to commencement of work.
Any doubt, ambiguity or omission of any part of the drawing or the specifications shall be referred to the designer for clarification prior to commencement of work.
Submit shop drawings of all assemblies for review prior to manufacture

Issue	Date	Description	Apd

Project
TIMMINS HOUSE
ROPOSED NEW DWELLING
53 BANKS BOULEVARD
WHITBY

Dwg Title
FLOOR PLANS

Purpose
BUILDING CONSENT

Date 19-Oct-17	Earthquake 3	Drawn A.K.J.	
Scale 1:100	Wind - H		
Job No. 1716	Exposure C		
Dwg No. A1-16		Issue A	

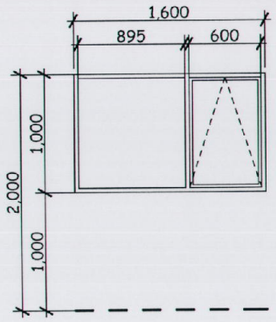

items as shown (W01, W02, W03); item handed (W04)

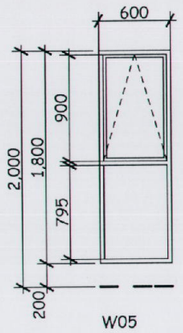

W05

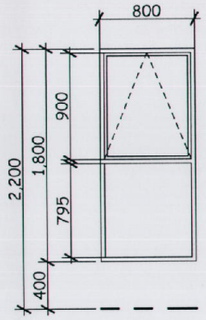

W06

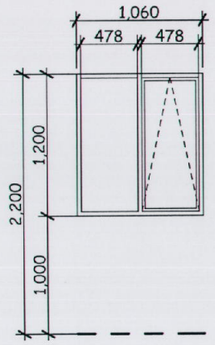

W07

Notes

4 Enclosure

4.07.18 **Exterior Door and windows specification**

All jamb liners to be paint quality finger jointed pine.-All hardware to client approval.-All glazing to be double glazed. Glazing to comply with NZS 4223 -All exterior openings to be flashed with Thermakraft flashing system.-Install all head, sill and air seals as necessary to provide the best possible weatherseal in accordance with NZBC E2/AS1.-All joinery units are shown from the outside.-All door sidelights, glass panels to doorsand bathroom windows to be safety glazed to NZS 4223. All upper floor and bathroom windows to have restrictor stays.

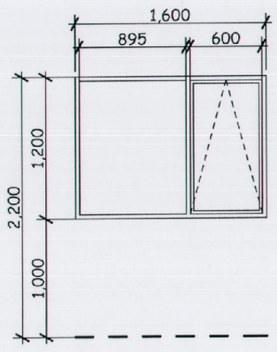

W08, W09

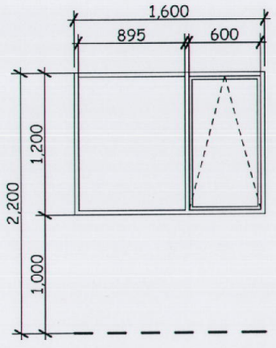

W10

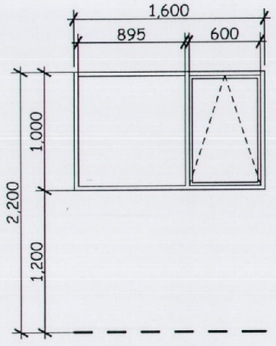

W11

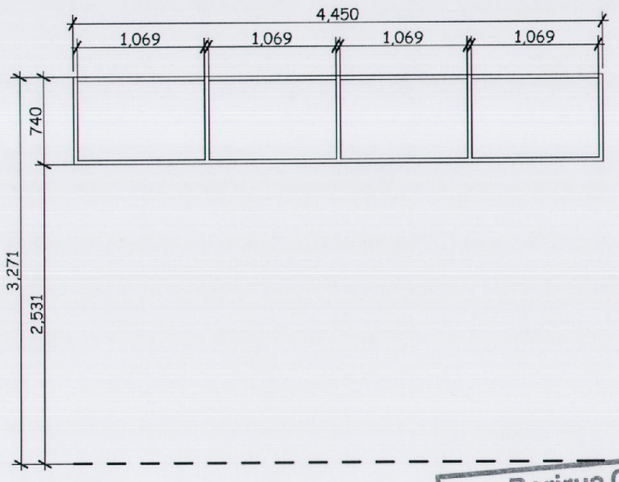

W12

Porirua City Council
Approved Consent Document
24 NOV 2017
0560/17
BCA Number
David Nolan
On behalf of Porirua City Council

Aartra
Design and Draughting

Aaran Judd B.Des (Int)
583 Paremata Haywards Road, RD1 Porirua, 5381
P 2377 919 F 2377 920 M 027 2345 672
LBP 108509

These drawings to be read in conjunction with the specification.
Use figured dimensions only.
Contractor to verify all dimensions prior to commencement of work.
Any doubt, ambiguity or omission of any part of the drawing or the specifications shall be referred to the designer for clarification prior to commencement of work.
Submit shop drawings of all assemblies for review prior to manufacture

Issue	Date	Description	Apd

Project
TIMMINS HOUSE
ROPOSED NEW DWELLING
53 BANKS BOULEVARD
WHITBY

Dwg Title
WINDOW SCHEDULE

Purpose
BUILDING CONSENT

Date	19-Oct-17	Earthquake	3	Drawn	A.K.J.
Scale	1:50	Wind	- H		
Job No.	1716	Exposure	C		
Dwg No.	A1-17			Issue	A

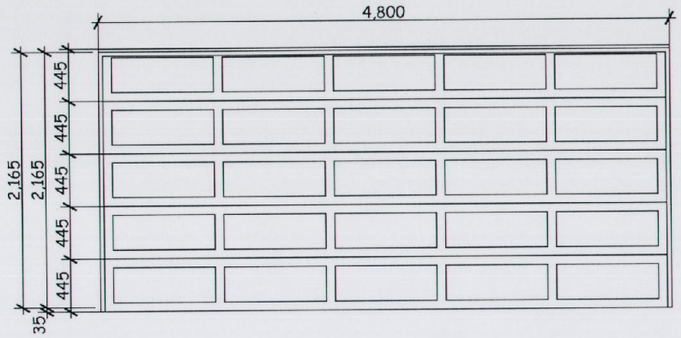

D01

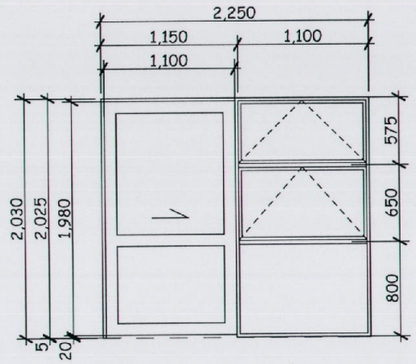

D02

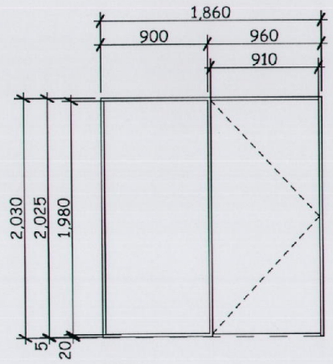

D03

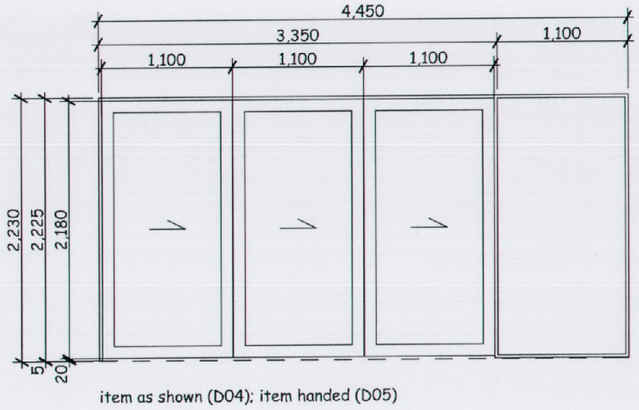

item as shown (D04); item handed (D05)

1
-

Door Schecdule
1:50

Porirua City Council
Approved Consent Document
24 NOV 2017
0560/17
BCA Number
David Nolan
On behalf of Porirua City Council

Aartra
Design and Draughting

Aaran Judd B.Des (Int)
583 Paremata Haywards Road, RD1 Porirua, 5381
P 2377 919 F 2377 920 M 027 2345 672
LBP 108509

These drawings to be read in conjunction with the specification.
Use figured dimensions only.
Contractor to verify all dimensions prior to commencement of work.
Any doubt, ambiguity or omission of any part of the drawing or the specifications shall be referred to the designer for clarifcation prior to commencement of work.
Submit shop drawings of all assemblies for review prior to manufacture

Issue	Date	Description	Apd

Project
TIMMINS HOUSE
ROPOSED NEW DWELLING
53 BANKS BOULEVARD
WHITBY

Dwg Title
DOOR SCHEDULE

Purpose
BUILDING CONSENT

Date 19-Oct-17	Earthquake 3	Drawn A.K.J.	
Scale 1:50	Wind - H		
Job No. 1716	Exposure C		
Dwg No. A1-18		Issue A	

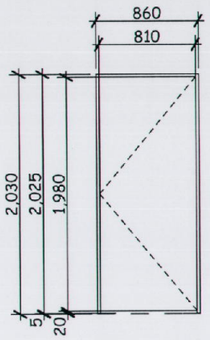

items as shown (ID02, ID04, ID14, ID15, ID16); items handed (ID01, ID07, ID09, ID10, ID13)

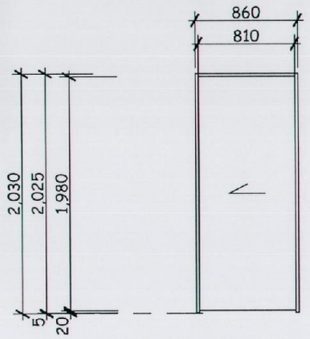

item as shown (ID03); item handed (ID12)

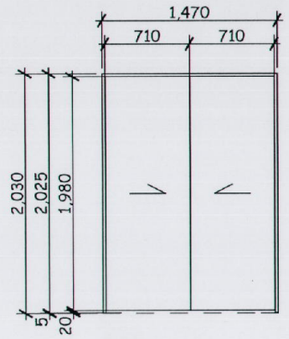

ID05

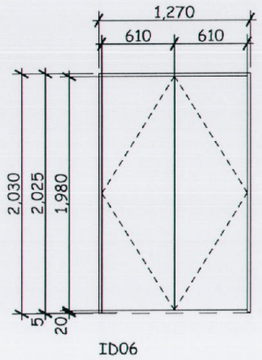

ID06

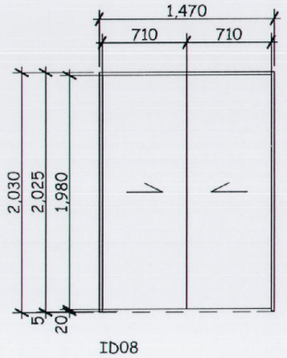

ID08

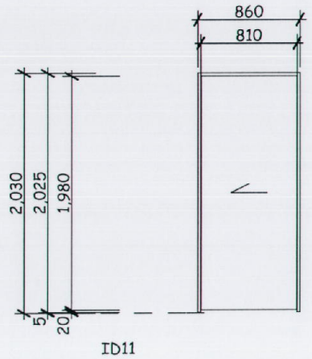

ID11

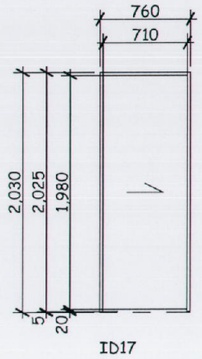

ID17

Porirua City Council
Approved Consent Document
24 NOV 2017
0560/17
BCA Number
David Nolan
On behalf of Porirua City Council

1
-

Interior Door Schecdule
1:50

Aartra
Design and Draughting

Aaran Judd B.Des (Int)
583 Paremata Haywards Road, RD1 Porirua, 5381
P 2377 919 F 2377 920 M 027 2345 672
LBP 108509

These drawings to be read in conjunction with the specification.
Use figured dimensions only.
Contractor to verify all dimensions prior to commencement of work.
Any doubt, ambiguity or omission of any part of the drawing or the specifications shall be referred to the designer for clarification prior to commencement of work.
Submit shop drawings of all assemblies for review prior to manufacture

Issue	Date	Description	Apd

Project
TIMMINS HOUSE
ROPOSED NEW DWELLING
53 BANKS BOULEVARD
WHITBY

Dwg Title
INTERIOR DOOR SCHEDULE

Purpose
BUILDING CONSENT

Date 19-Oct-17	Earthquake 3	Drawn A.K.J.	
Scale 1:50	Wind - H		
Job No. 1716	Exposure C		
Dwg No. A1-19		Issue A	

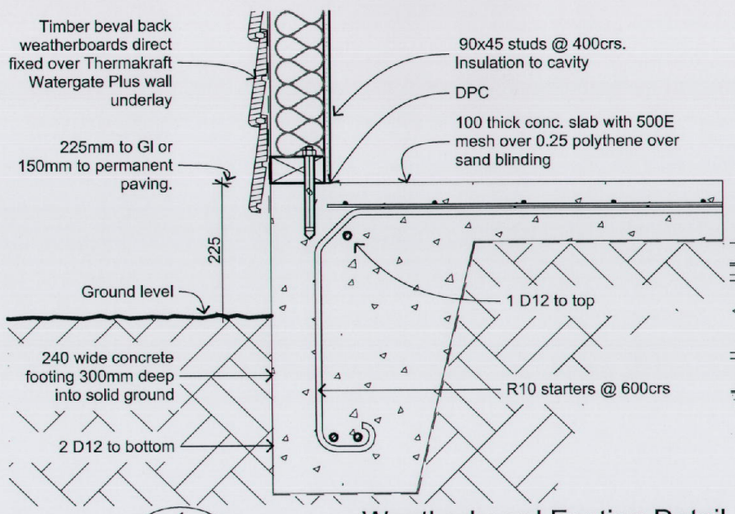

1
-
Weatherboard Footing Detail
1:10

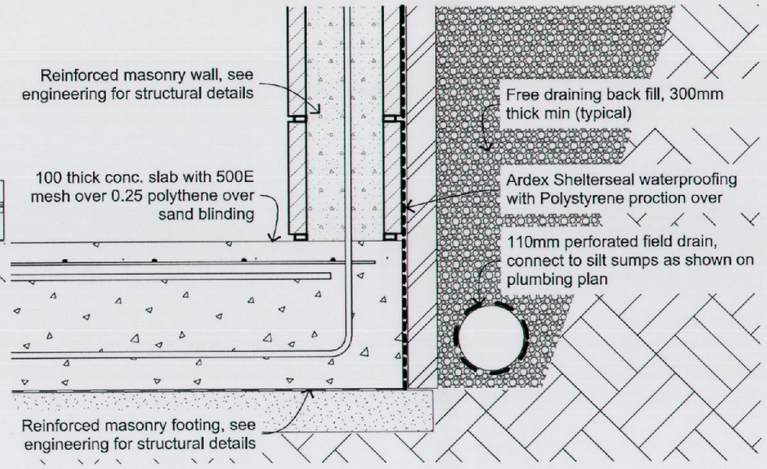

2
-
Masonry (typ) Detail
1:10

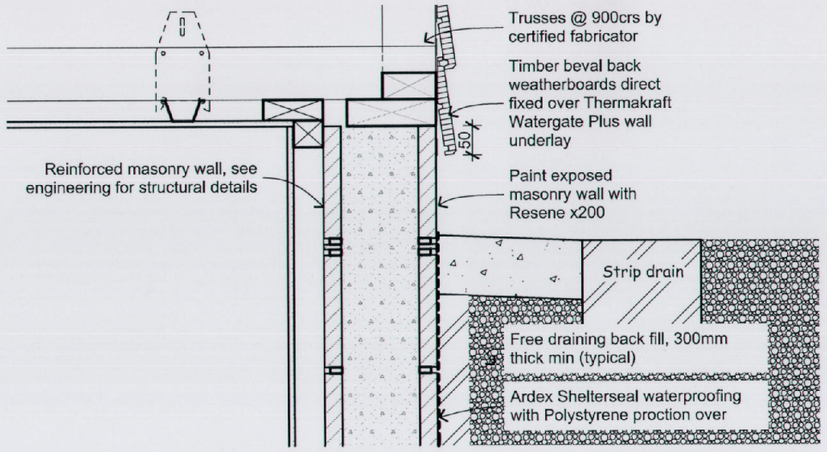

3
-
Top of Masonry Wall Detail
1:10

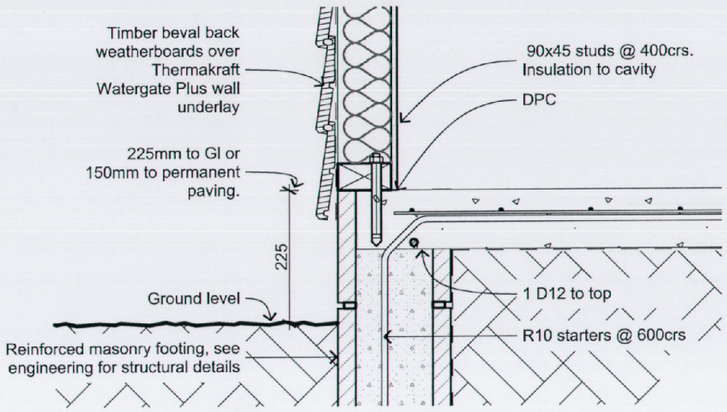

4
-
Foundation Wall/ Slab Detail
1:10

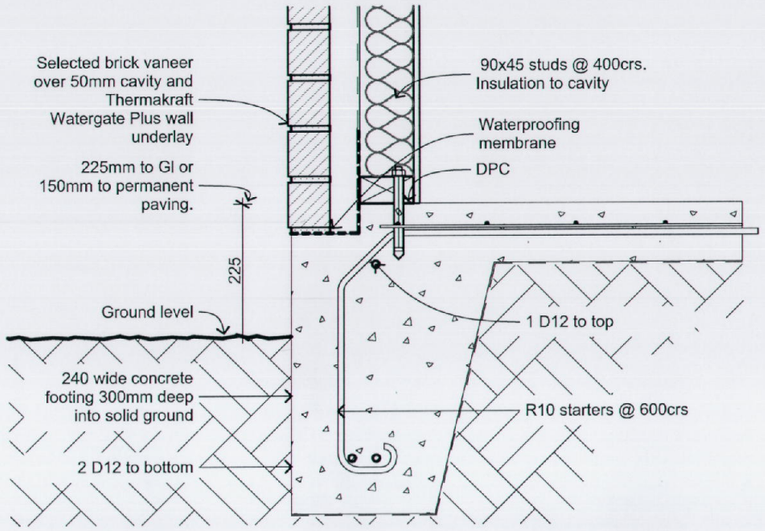

5
-
Brick Footing Detail
1:10

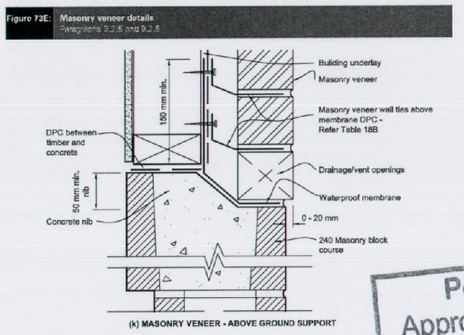

Porirua City Council
Approved Consent Document
24 NOV 2017
0560/17
BCA Number
David Nolan
On behalf of Porirua City Council

Aartra
Design and Draughting

Aaran Judd B.Des (Int)
583 Paremata Haywards Road, RD1 Porirua, 5381
P 2377 919 F 2377 920 M 027 2345 672
LBP 108509

These drawings to be read in conjunction with the specification.
Use figured dimensions only.
Contractor to verify all dimensions prior to commencement of work.
Any doubt, ambiguity or omission of any part of the drawing or the specifications shall be referred to the designer for clarification prior to commencement of work.
Submit shop drawings of all assemblies for review prior to manufacture

Issue	Date	Description	Apd

Project
TIMMINS HOUSE
ROPOSED NEW DWELLING
53 BANKS BOULEVARD
WHITBY

Dwg Title
DETAILS

Purpose
BUILDING CONSENT

Date 19-Oct-17	Earthquake 3	Drawn A.K.J.	
Scale 1:10	Wind - H		
Job No. 1716	Exposure C		
Dwg No. A1-20		Issue A	

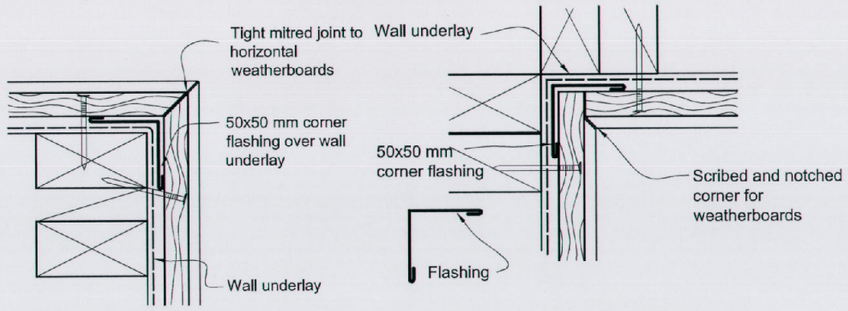

(b) DIRECT FIX MITRED EXTERNAL CORNER

(a) DIRECT FIX — INTERNAL BUTT CORNER

1 / - Weatherboard Details 1:5

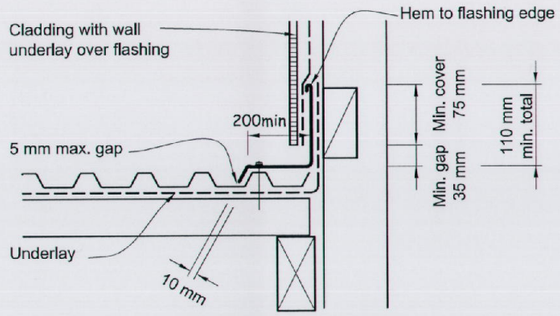

(b) TRAPEZOIDAL PROFILE

4 / - Apron Detail 1:10

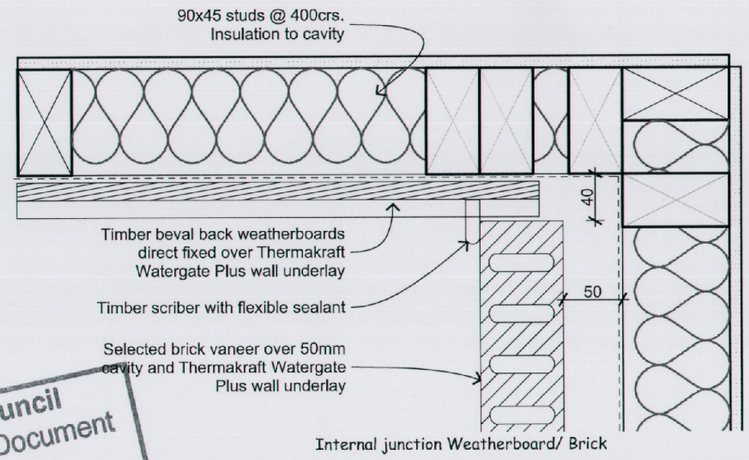

Figure 8B: Gutter/wall junction
Paragraphs 5.1 and 5.2

NOTE: (1) The upstand at the lower edge of the *apron flashing* may be preformed to a larger size and then trimmed on site to suit.
(2) The transition *flashing* bridges gap at the end of the fascia to protect the soffit *framing*.
(3) *Wall underlay* omitted for clarity.

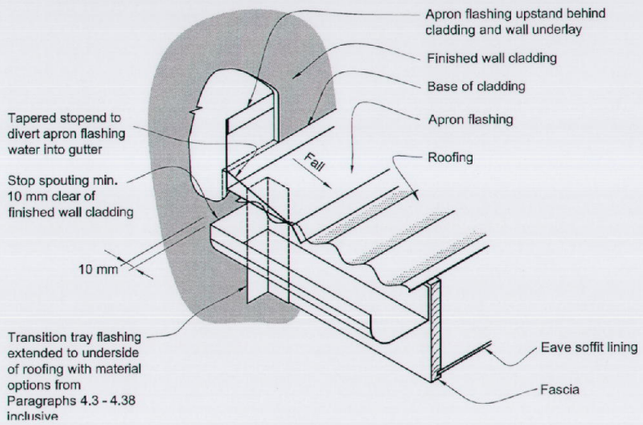

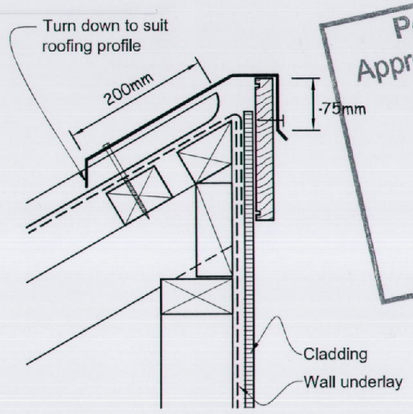

(b) ROOF / WALL RIDGE

6 / - Barge Detail 1:10

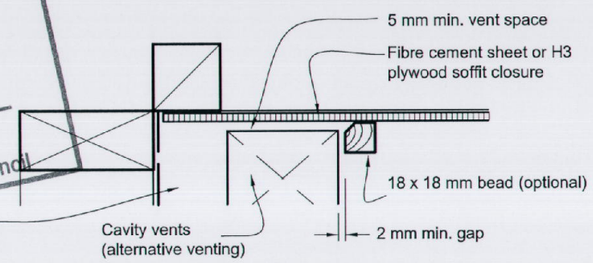

(l) MASONRY VENEER - SOFFIT DETAIL

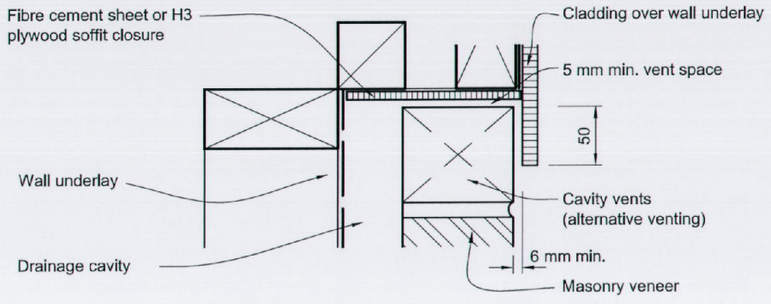

(m) MASONRY VENEER - CANTILEVER UPPER FLOOR

2 / - Brick Detail 1:5

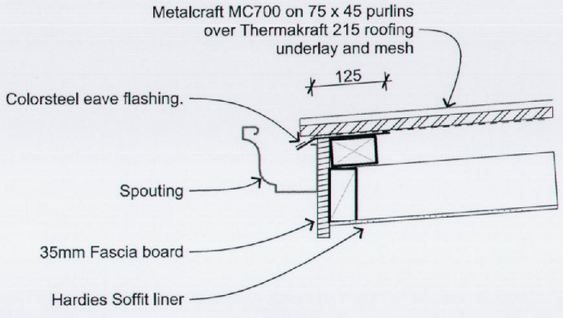

5 / - Eave Detail 1:10

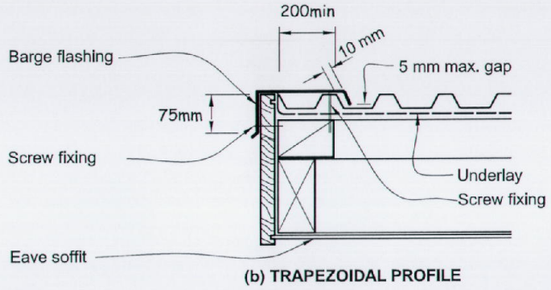

(b) TRAPEZOIDAL PROFILE

3 / - Barge Detail 1:10

Porirua City Council
Approved Consent Document
24 NOV 2017
0560/17
BCA Number
David Nolan
On behalf of Porirua City Council

Aartra
Design and Draughting
Aaran Judd B.Des (Int)
583 Paremata Haywards Road, RD1 Porirua, 5381
P 2377 919 F 2377 920 M 027 2345 672
LBP 108509

These drawings to be read in conjunction with the specification.
Use figured dimensions only.
Contractor to verify all dimensions prior to commencement of work.
Any doubt, ambiguity or omission of any part of the drawing or the specifications shall be referred to the designer for clarification prior to commencement of work.
Submit shop drawings of all assemblies for review prior to manufacture

Issue	Date	Description	Apd

Project: TIMMINS HOUSE
ROPOSED NEW DWELLING
53 BANKS BOULEVARD
WHITBY

Dwg Title: DETAILS

Purpose: BUILDING CONSENT

Date 19-Oct-17	Earthquake 3	Drawn A.K.J.	
Scale 1:5, 1:10	Wind - H		
Job No. 1716	Exposure C		
Dwg No. A1-21		Issue A	

Figure 81: Windows and doors for direct fixed bevel-back weatherboards
Paragraph 9.4.6

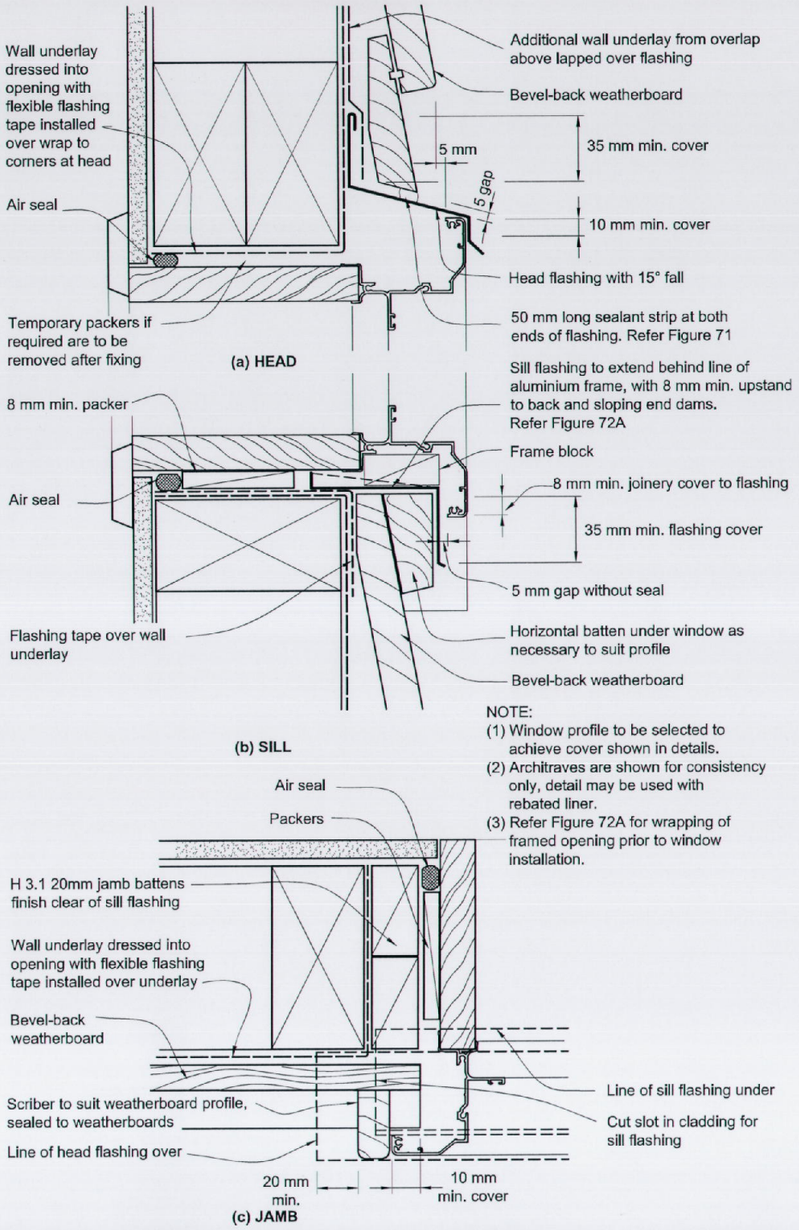

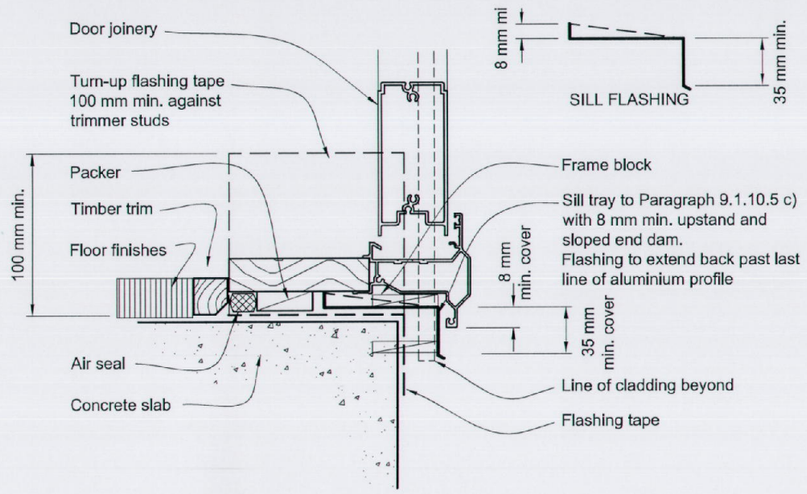

(a) CONCRETE SLAB

Porirua City Council
Approved Consent Document
24 NOV 2017
0560/17
BCA Number
David Nolan
On behalf of Porirua City Council

Aartra
Design and Draughting
Aaran Judd B.Des (Int)
583 Paremata Haywards Road, RD1 Porirua, 5381
P 2377 919 F 2377 920 M 027 2345 672
LBP 108509

These drawings to be read in conjunction with the specification.
Use figured dimensions only.
Contractor to verify all dimensions prior to commencement of work.
Any doubt, ambiguity or omission of any part of the drawing or the specifications shall be referred to the designer for clarification prior to commencement of work.
Submit shop drawings of all assemblies for review prior to manufacture

Issue	Date	Description	Apd

Project
TIMMINS HOUSE
ROPOSED NEW DWELLING
53 BANKS BOULEVARD
WHITBY

Dwg Title
DETAILS

Purpose
BUILDING CONSENT

Date 19-Oct-17	Earthquake 3	Drawn A.K.J.	
Scale 1:5	Wind H		
Job No. 1716	Exposure C		
Dwg No. A1-22		Issue A	

Figure 73C: Masonry veneer window and door installation
Paragraphs 9.2.4, 9.2.6 and 9.2.9

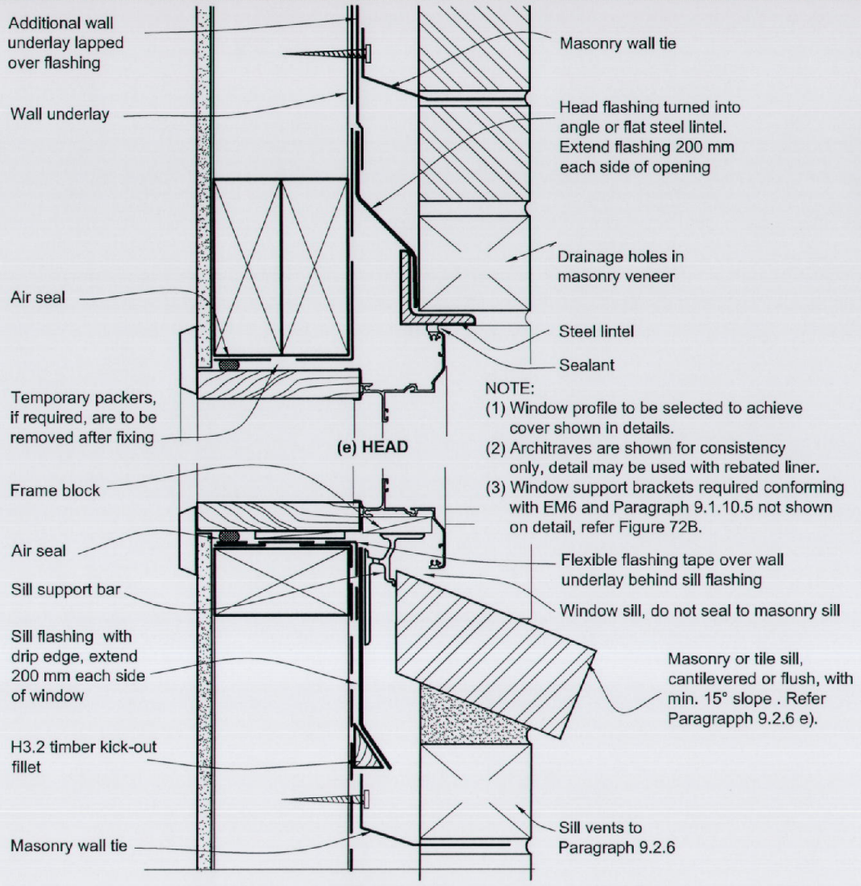

NOTE:
(1) Window profile to be selected to achieve cover shown in details.
(2) Architraves are shown for consistency only, detail may be used with rebated liner.
(3) Window support brackets required conforming with EM6 and Paragraph 9.1.10.5 not shown on detail, refer Figure 72B.

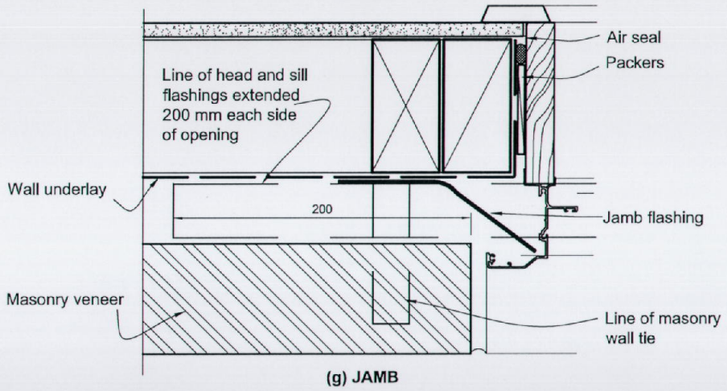

Figure 73D: Masonry veneer details
Paragraph 9.2.5

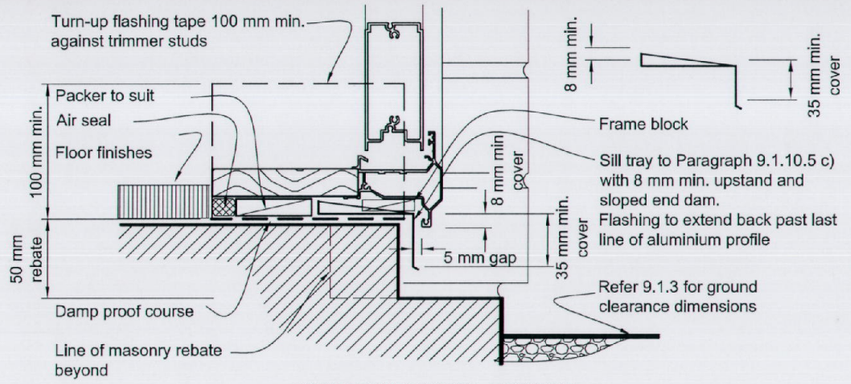

(h) MASONRY VENEER - DOOR SILL

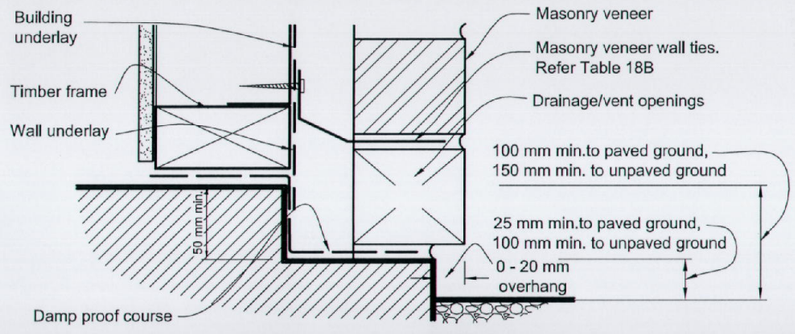

(i) MASONRY VENEER - FLOOR REBATE DETAIL

Porirua City Council
Approved Consent Document
24 NOV 2017
0560/17
BCA Number
David Nolan
On behalf of Porirua City Council

Aartra
Design and Draughting
Aaran Judd B.Des (Int)
583 Paremata Haywards Road, RD1 Porirua, 5381
P 2377 919 F 2377 920 M 027 2345 672
LBP 108509

These drawings to be read in conjunction with the specification.
Use figured dimensions only.
Contractor to verify all dimensions prior to commencement of work.
Any doubt, ambiguity or omission of any part of the drawing or the specifications shall be referred to the designer for clarification prior to commencement of work.
Submit shop drawings of all assemblies for review prior to manufacture

Issue	Date	Description	Apd

Project
TIMMINS HOUSE
ROPOSED NEW DWELLING
53 BANKS BOULEVARD
WHITBY

Dwg Title
DETAILS

Purpose
BUILDING CONSENT

Date 19-Oct-17	Earthquake 3	Drawn A.K.J.	
Scale 1:5	Wind - H		
Job No. 1716	Exposure C		
Dwg No. A1-23		Issue A	

GIB EzyBrace® System Specification – GS1-N

JUNE 2011

Specification Code	Minimum Length (m)	Lining requirement
GS1-N	0.4	Any 10mm or 13mm GIB® Standard Plasterboard to one side only

WALL FRAMING

Wall framing to comply with;

- NZBC B1 - Structure; AS1 Clause 3 Timber (NZS 3604:2011)
- NZBC B2 - Durability AS1 Clause 3.2 Timber (NZS 3602)

Framing dimensions and height as determined by NZS 3604 stud and top plate tables for load bearing and non-bearing walls. The use of kiln dried stress graded timber is recommended.

BOTTOM PLATE FIXING

Timber Floor

Pairs of hand driven 100 x 3.75mm nails at 600mm centres;
or
Three power driven 90 x 3.15 nails at 600mm centres.

Concrete floor

INTERNAL WALL BRACING LINES

In accordance with the requirements of NZS 3604:2011 for internal wall plate fixing or 75 x 3.8mm shot fired fasteners with 16mm discs spaced at 150mm and 300mm from end studs and 600mm centres thereafter.

EXTERNAL WALL BRACING LINES

In accordance with the requirements of NZS 3604 for external plate fixing.

WALL LINING

Any 10mm or 13mm GIB® Plasterboard lining.
Sheets can be fixed vertically or horizontally.
Sheet joints shall be touch fitted.
Use full length sheets where possible.

PERMITTED SUBSTITUTION

For permitted GIB® Plasterboard substitutions refer to Page 21 in GIB Ezybrace® Systems 2011.

FASTENING THE LINING

Fasteners

32mm x 6g GIB® Grabber® high thread screws; or 30mm GIB® Nails.

Fastener centres

50,100,150, 225, 300mm from each corner and 150mm thereafter around the perimeter of the bracing element.
For vertically fixed sheets place fasteners at 300mm centres to intermediate sheet joints.
For horizontally fixed sheets place single fasteners to the sheet edge where it crosses the stud.
Use daubs of GIB Fix® adhesive at 300mm centres to intermediate studs.
Place fasteners no closer than 12mm from paper bound sheet edges and 18mm from any sheet end or cut edge.

JOINTING

All fastener heads stopped and all sheet joints paper tape reinforced and stopped in accordance with the GIB® Site Guide.

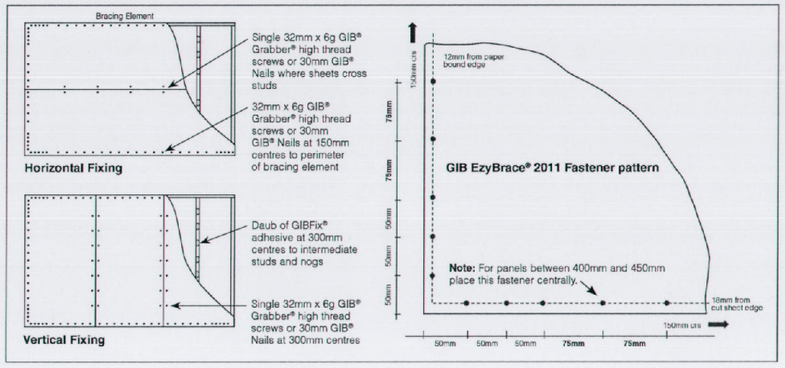

In order for GIB® systems to perform as tested, all components must be installed exactly as prescribed. Substituting components produces an entirely different system and may seriously compromise performance. Follow the specifications. This Specification sheet is issued in conjunction with the publication GIB EzyBrace® Systems 2011 and has been appraised in accordance with the BRANZ Appraisal No. 294 (2011).

BRANZ Appraised
Appraisal No.294 [2011]

Construction

Construction

GIB EzyBrace® System Specification – BL1-H

JUNE 2011

Specification Code	Minimum Length (m)	Lining requirement	Other requirements
BL1-H	0.4	10mm or 13mm GIB Braceline® to one side only	Hold downs

WALL FRAMING

Wall framing to comply with;

- NZBC B1 - Structure; AS1 Clause 3 Timber (NZS 3604:2011)
- NZBC B2 - Durability AS1 Clause 3.2 Timber (NZS 3602)

Framing dimensions and height as determined by NZS 3604 stud and top plate tables for load bearing and non-bearing walls. The use of kiln dried stress graded timber is recommended.

BOTTOM PLATE FIXING

Timber Floor

Use panel hold downs at each end of the bracing element. The GIB HandiBrac® is recommended. See details in GIB Ezybrace® Systems 2011 or GIB® Site Guide.
Pairs of hand driven 100 x 3.75mm nails at 600mm centres;
or
Three power driven 90 x 3.15 nails at 600mm centres.

Concrete floor

Use panel hold downs at each end of the bracing element. The GIB HandiBrac® is recommended. See details in GIB Ezybrace® Systems 2011 or GIB® Site Guide. Within the length of the bracing element bottom plates are to be fixed in accordance with the requirements of NZS 3604.

WALL LINING

One layer 10mm or 13mm GIB® Braceline.
Sheets can be fixed vertically or horizontally.
Sheet joints shall be touch fitted.
Use full length sheets where possible.

PERMITTED SUBSTITUTION

For permitted GIB® Plasterboard substitutions refer to Page 21 in GIB Ezybrace® Systems 2011.

FASTENING THE LINING

Fasteners

32mm x 6g GIB® Grabber® high thread screws.
(GIB Braceline® Nails may be used with 10mm GIB Braceline® only.)

Fastener centres

50,100,150, 225, 300mm from each corner and 150mm thereafter around the perimeter of the bracing element.
For vertically fixed sheets place fasteners at 300mm centres to the sheet joint.
For horizontally fixed sheets place single fasteners to the sheet edge where it crosses the stud.
Use daubs of GIB Fix® adhesive at 300mm centres to intermediate studs.
Place fasteners no closer than 12mm from paper bound sheet edges and 18mm from any sheet end or cut edge.

JOINTING

All fastener heads stopped and all sheet joints paper tape reinforced and stopped in accordance with the GIB® Site Guide.

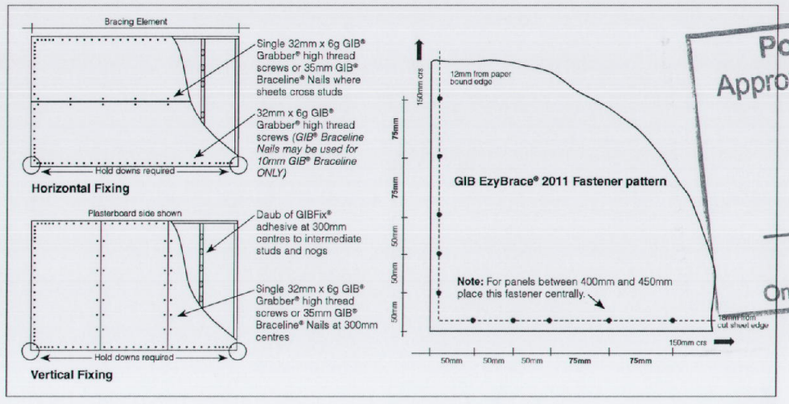

Porirua City Council
Approved Consent Document
24 NOV 2017
0566/17
BCA Number
David Nolan
On behalf of Porirua City Council

In order for GIB® systems to perform as tested, all components must be installed exactly as prescribed. Substituting components produces an entirely different system and may seriously compromise performance. Follow the specifications. This Specification sheet is issued in conjunction with the publication GIB EzyBrace® Systems 2011 and has been appraised in accordance with the BRANZ Appraisal No. 294 (2011).

BRANZ Appraised
Appraisal No.294 [2011]

Aartra
Design and Draughting

Aaran Judd B.Des (Int)
583 Paremata Haywards Road, RD1 Porirua, 5381
P 2377 919 F 2377 920 M 027 2345 672
LBP 108509

These drawings to be read in conjunction with the specification.
Use figured dimensions only.
Contractor to verify all dimensions prior to commencement of work.
Any doubt, ambiguity or omission of any part of the drawing or the specifications shall be referred to the designer for clarification prior to commencement of work.
Submit shop drawings of all assemblies for review prior to manufacture

Issue	Date	Description	Apd

Project
TIMMINS HOUSE
ROPOSED NEW DWELLING
53 BANKS BOULEVARD
WHITBY

Dwg Title
BRACING DETAILS

Purpose
BUILDING CONSENT

Date 19-Oct-17	Earthquake 3	Drawn A.K.J.	
Scale 1:10	Wind - H		
Job No. 1716	Exposure C		
Dwg No. A1-24		Issue A	

3.3 ECOPLY® BRACING SPECIFICATION - EP1

Table 10: Singled Sided Structural Plywood Brace

Specification No.	Minimum Wall Length	Lining Requirements	BUs/m Wind	BUs/m Earthquake
EP1_0.4	0.4 m	Ecoply one side	80	95
EP1_0.6	0.6 m	Ecoply one side	95	105
EP1_1.2	1.2 m	Ecoply one side	120	135

Framing

Wall framing must comply with:

- NZBC B1 - Structure: AS1 Clause 3 Timber (NZS 3604)
- NZBC B2 - Durability: AS1 Clause 3.2 Timber (NZS 3602)

Framing dimensions and height are as determined by the NZS 3604 stud and top plate tables for load bearing and non load bearing walls. Kiln dried verified structural grade timber must be used. Machine stress graded timber, such as Laserframe® of SG8 stress grade minimum, is recommended.

Bottom plate fixing

Use GIB Handibrac® hold-down connections at each end of the bracing element. Refer to manufacturer installation instructions supplied with the connectors for correct installation instructions and bolt types to be used for either concrete or timber floors. Within the length of the bracing element, bottom plates are fixed in accordance with the requirements of NZS 3604.

Lining

One layer of 7 mm, 9 mm or 12 mm Ecoply plywood fixed directly to framing or over cavity battens. If part sheets are used, ensure nailing at required centres is carried out around the perimeter of each sheet or part sheet. A 2-3 mm expansion gap should be left between sheets.

Fastening the Ecoply® panels

Fasten with 50 x 2.8 mm hot dipped galvanised or stainless steel flat head nails for direct fix, or 60 x 2.8 mm over cavity battens. Place fasteners no less than 7 mm or 3 fastener diameters from sheet edges. Screws cannot be used. Power driven nails are suitable. Do not overdrive, nails must be full round head.

Fasteners for H3.2 CCA treated Ecoply® panels

Where fasteners are in contact with H3.2 CCA treated timber or plywood, fasteners shall be a minimum of hot dip galvanised.

In certain circumstances stainless steel fasteners may be required. Refer to Table 8 of the Ecoply Specification and Installation Guide for these circumstances and further fastener selection advice. Where stainless steel nails are required, annular grooved nails must be used.

Fastening centres

Fasteners are placed at 150 mm centres around the perimeter of each sheet and 300 mm centres to intermediate studs. Where more than one sheet forms the brace element each sheet must be nailed off independently.

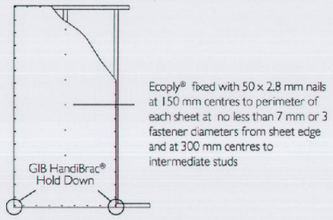

Ecoply® Bracing Systems are designed to meet the requirements of the NZBC and have been tested and analysed using the P21 method referenced in NZS 3604:2011 listed as an acceptable solution B1/AS1 Structure. Testing was carried out using Ecoply manufactured by Carter Holt Harvey and SG8 timber framing, and GIB® products manufactured by Winstone Wallboards Ltd. Substituting materials may compromise performance of the system. GIB® and GIB HandiBrac® are registered trade marks of Fletcher Building Holdings Ltd.

SEPTEMBER 2015

Porirua City Council
Approved Consent Document
24 NOV 2017
0560/17
BCA Number
David Nolan
On behalf of Porirua City Council

Aartra
Design and Draughting

Aaran Judd B.Des (Int)
583 Paremata Haywards Road, RD1 Porirua, 5381
P 2377 919 F 2377 920 M 027 2345 672
LBP 108509

These drawings to be read in conjunction with the specification.
Use figured dimensions only.
Contractor to verify all dimensions prior to commencement of work.
Any doubt, ambiguity or omission of any part of the drawing or the specifications shall be referred to the designer for clarification prior to commencement of work.
Submit shop drawings of all assemblies for review prior to manufacture

Issue	Date	Description	Apd

Project
TIMMINS HOUSE
ROPOSED NEW DWELLING
53 BANKS BOULEVARD
WHITBY

Dwg Title
BRACING DETAILS

Purpose
BUILDING CONSENT

Date	19-Oct-17	Earthquake	3	Drawn	A.K.J.
Scale	1:10	Wind	H		
Job No.	1716	Exposure	C		
Dwg No.	A1-25			Issue	A

LUMBERLOK®

LINTEL FIXING SCHEDULE

ALTERNATIVE TO TABLE 8.14 & FIGURE 8.12 NZS 3604:2011

NOTE:

- ★ All fixings are designed for vertical loads only. Dead loads include the roof weight and standard ceiling weight of 0.20 kPa.
- ★ Refer to Table 8.19 NZS 3604:2011 for nailing schedule to resist horizontal loads.
- ★ These fixings assume the correct choice of rafter/truss to top plate connections have been made.
- ★ All fixings assume bottom plate thickness of 45mm maximum. Note: TYLOK options on timber species.
- ★ Wall framing arrangements under girder trusses are not covered in this schedule.
- ★ All timber selections are as per NZS 3604:2011.

DEFINITIONS

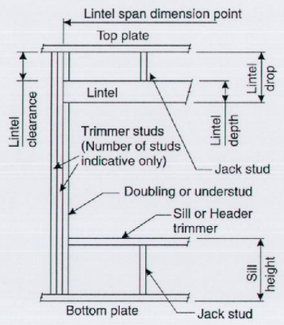

Lintel Supporting Girder Trusses:

Roof Tributary Area	Light Roof Wind Zone L, M, H	Light Roof Wind Zone VH	Light Roof Wind Zone EH	Heavy Roof Wind Zone L, M, H	Heavy Roof Wind Zone VH	Heavy Roof Wind Zone EH
8.6 m²	G	G	H	G	G	H
11.6 m²	G	H	H	G	G	H
12.1 m²	G	H	H	G	H	H
15.3 m²	H	H	-	G	H	H
19.1 m²	H	-	-	G	H	-
20.9 m²	H	-	-	H	H	-
21.8 m²	H	-	-	H	-	-
34.3 m²	-	-	-	H	-	-

Notes:
1) Roof Tributary Area = approx. 1/2 x (Total roof area on girder and rafter trusses supported by lintel)
2) Assumed girder truss is at mid-span or middle third span of lintel
3) Use similar fixings for both ends of lintel
4) All other cases require specific engineering design

SELECTION CHART FOR LINTEL FIXING

Lintel Span	Loaded Dimension (See Fig. 1.3 NZS 3604:2011)	Light Roof Wind Zone L	M	H	VH	EH	Heavy Roof Wind Zone L	M	H	VH	EH
0.7	2.0	E	E	E	E	F	E	E	E	E	E
	3.0	E	E	E	F	F	E	E	E	E	F
	4.0	E	E	F	F	F	E	E	E	F	F
	5.0	E	F	F	F	G	E	E	F	F	F
	6.0	E	F	F	G	G	E	E	F	F	G
0.9	2.0	E	E	E	F	F	E	E	E	E	F
	3.0	E	E	F	F	F	E	E	E	F	F
	4.0	E	E	F	F	F	E	E	F	F	F
	5.0	E	F	F	F	G	E	E	F	F	F
	6.0	E	F	F	G	G	E	E	F	F	G
1.0	2.0	E	E	E	F	F	E	E	E	E	F
	3.0	E	E	F	F	F	E	E	E	F	F
	4.0	E	F	F	F	G	E	E	F	F	F
	5.0	E	F	F	G	G	E	E	F	F	G
	6.0	E	F	F	G	G	E	E	F	F	G
1.2	2.0	E	E	F	F	F	E	E	E	F	F
	3.0	E	E	F	F	F	E	E	F	F	F
	4.0	E	F	F	G	G	E	E	F	F	G
	5.0	E	F	F	G	G	E	E	F	F	G
	6.0	F	E	G	G	H	E	E	F	G	G
1.5	2.0	E	E	F	F	F	E	E	E	F	F
	3.0	E	F	F	F	G	E	E	F	F	F
	4.0	E	F	F	G	G	E	E	F	F	G
	5.0	F	F	G	G	H	E	E	F	G	G
	6.0	F	F	G	H	H	E	E	F	G	H
2.0	2.0	E	F	F	F	G	E	E	F	F	F
	3.0	E	F	F	G	G	E	E	F	F	G
	4.0	F	F	G	G	H	E	E	F	G	G
	5.0	F	F	G	H	H	E	E	F	G	H
	6.0	F	G	G	H	H	E	F	G	H	H
2.4	2.0	E	F	F	G	G	E	E	F	F	G
	3.0	F	F	G	G	H	E	E	F	G	G
	4.0	F	F	G	H	H	E	E	F	G	H
	5.0	F	G	G	H	H	E	F	G	H	H
	6.0	F	G	H	H	-	E	F	G	H	H
3.0	2.0	E	F	F	G	G	E	E	F	F	G
	3.0	F	F	G	H	H	E	E	F	G	H
	4.0	F	G	G	H	H	E	F	G	H	H
	5.0	F	G	H	H	-	E	F	G	H	H
	6.0	F	G	H	-	-	E	F	G	H	-
3.6	2.0	F	F	G	G	H	E	E	F	G	G
	3.0	F	F	G	H	H	E	F	G	G	H
	4.0	F	G	H	H	-	E	F	G	H	H
	5.0	F	G	H	-	-	E	F	G	H	-
	6.0	G	H	H	-	-	E	F	H	-	-
4.2	2.0	F	F	G	G	H	E	E	F	G	G
	3.0	F	G	H	H	-	E	F	G	H	H
	4.0	F	G	H	-	-	E	F	G	H	-
	5.0	G	H	H	-	-	E	F	H	-	-
	6.0	G	H	-	-	-	E	F	H	-	-
4.5	2.0	F	F	G	H	H	E	E	F	G	H
	3.0	F	G	H	H	-	E	F	G	H	H
	3.4	F	G	H	H	-	E	F	G	H	-
	4.0	F	G	H	-	-	E	F	G	H	-
	5.0	G	H	-	-	-	E	F	H	-	-
	6.0	G	H	-	-	-	E	F	H	-	-
4.8	2.0	F	F	G	H	H	E	E	F	G	H
	3.0	F	G	H	H	-	E	F	G	H	H
	3.2	F	G	H	H	-	F	F	G	H	-
	4.0	F	G	H	-	-	E	F	H	H	-
	5.0	G	H	-	-	-	E	F	H	-	-
	6.0	G	H	-	-	-	E	F	H	-	-

8. WALLS

© Copyright 2011 MiTek Holdings, Inc. All rights reserved.

LINTEL FIXING OPTIONS

LUMBERLOK®

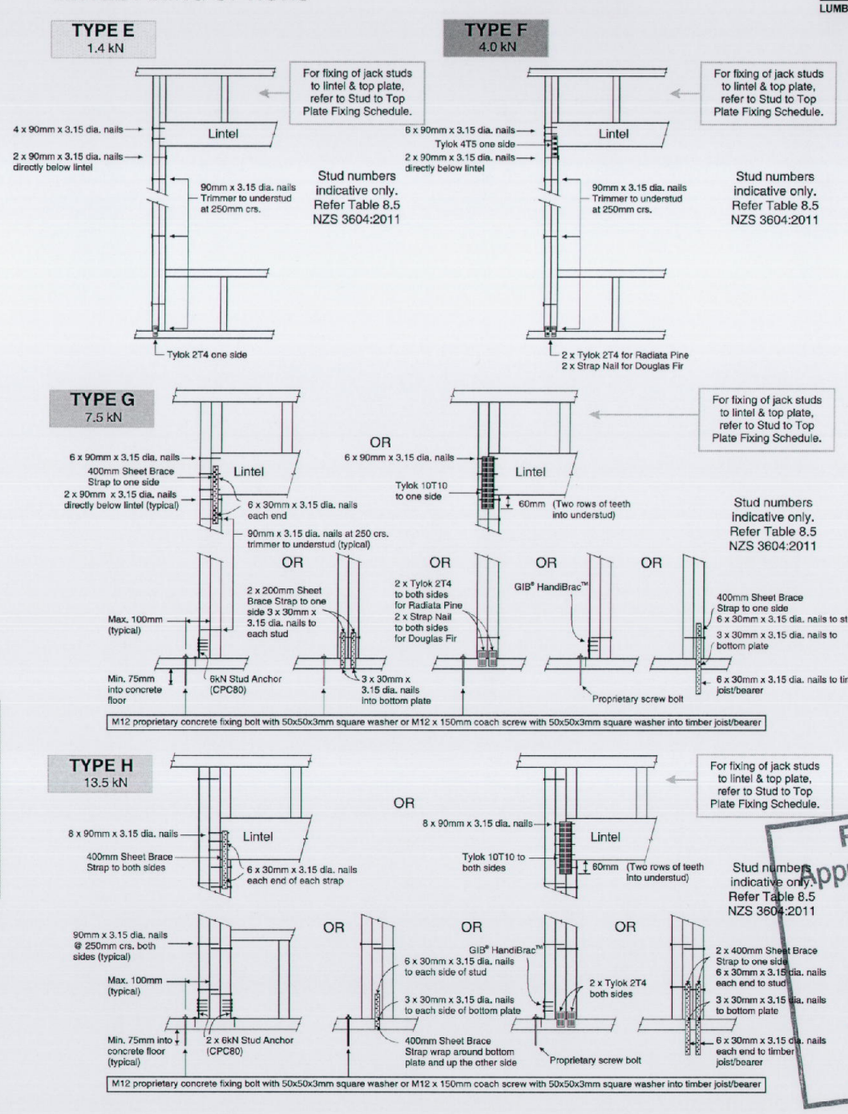

Porirua City Council
Approved Consent Document
24 NOV 2017
0560/17
BCA Number
David Nolan
On behalf of Porirua City Council

© Copyright 2011 MiTek Holdings, Inc. All rights reserved.

Aartra
Design and Draughting

Aaran Judd B.Des (Int)
583 Paremata Haywards Road, RD1 Porirua, 5381
P 2377 919 F 2377 920 M 027 2345 672
LBP 108509

These drawings to be read in conjunction with the specification.
Use figured dimensions only.
Contractor to verify all dimensions prior to commencement of work.
Any doubt, ambiguity or omission of any part of the drawing or the specifications shall be referred to the designer for clarification prior to commencement of work.
Submit shop drawings of all assemblies for review prior to manufacture

Issue	Date	Description	Apd

Project
TIMMINS HOUSE
ROPOSED NEW DWELLING
53 BANKS BOULEVARD
WHITBY

Dwg Title
LINTEL DETAILS

Purpose
BUILDING CONSENT

Date 19-Oct-17	Earthquake 3	Drawn A.K.J.	
Scale 1:10	Wind - H		
Job No. 1716	Exposure C		
Dwg No. A1-26		Issue A	

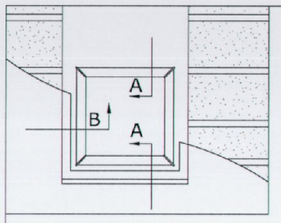

Please note:
Below 15 degrees:
- Any condensation that forms on the glass due to high humidity may drip

FCM

0°-60°

ELEVATION

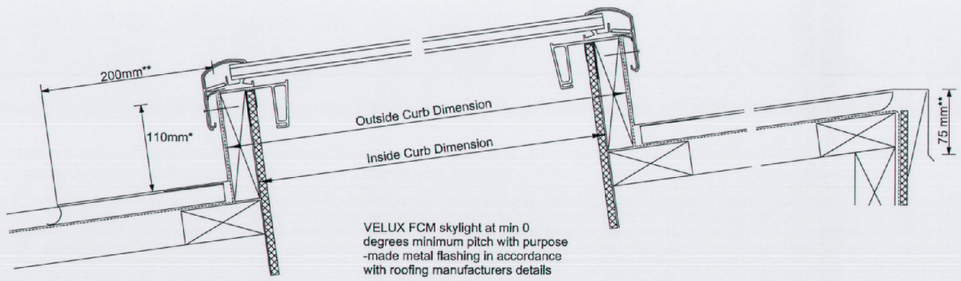

SECTION A-A

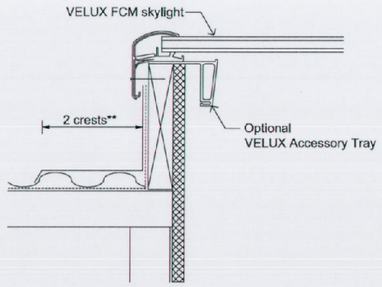

SECTION B-B

* The upstand shall be in accordance with the minimum requirements as set out in the Approved Document for New Zealand Building Code - External Moisture, clause E2

** All flashings for FCM skylights are to be purpose-made to suit the roofing material, and subject to Approved Document for NZ Building Code - External Moisture, clause E2

PRODUCT DIMENSIONS METRIC UNITS (MILLIMETERS)		
SIZE	OUTSIDE CURB DIMENSION	INSIDE CURB DIMENSION
2222	548 x 548	572 x 572
2246	548 x 1257	572 x 1181
2270	548 x 1867	572 x 1791
3030	851 x 851	775 x 775
3434	952 x 952	876 x 876
4646	1257 x 1257	1181 x 1181

Porirua City Council
Approved Consent Document
24 NOV 2017
0560/17
BCA Number
David Nolan
On behalf of Porirua City Council

VELUX
Sky-Product Management
NEW ZEALAND LTD.
0800 650 445

	Name	Date
Drawn by		May 12
Checked by		May 12
Drawing No.		

FCM - Fixed Skylight in Profiled Metal Roof (pitch <15 degrees)

This drawing is an instrument of service and is provided for informational use only.

© 2012 VELUX GROUP

® VELUX is a registered trademark

Aartra
Design and Draughting

Aaran Judd B.Des (Int)
583 Paremata Haywards Road, RD1 Porirua, 5381
P 2377 919 F 2377 920 M 027 2345 672
LBP 108509

These drawings to be read in conjunction with the specification.
Use figured dimensions only.
Contractor to verify all dimensions prior to commencement of work.
Any doubt, ambiguity or omission of any part of the drawing or the specifications shall be referred to the designer for clarification prior to commencement of work.
Submit shop drawings of all assemblies for review prior to manufacture

Issue	Date	Description	Apd

Project
TIMMINS HOUSE
ROPOSED NEW DWELLING
53 BANKS BOULEVARD
WHITBY

Dwg Title
SKYLIGHT

Purpose
BUILDING CONSENT

Date	19-Oct-17	Earthquake	3	Drawn	A.K.J.
Scale	1:10	Wind	- H		
Job No.	1716	Exposure	C		
Dwg No.	A1-27			Issue	A

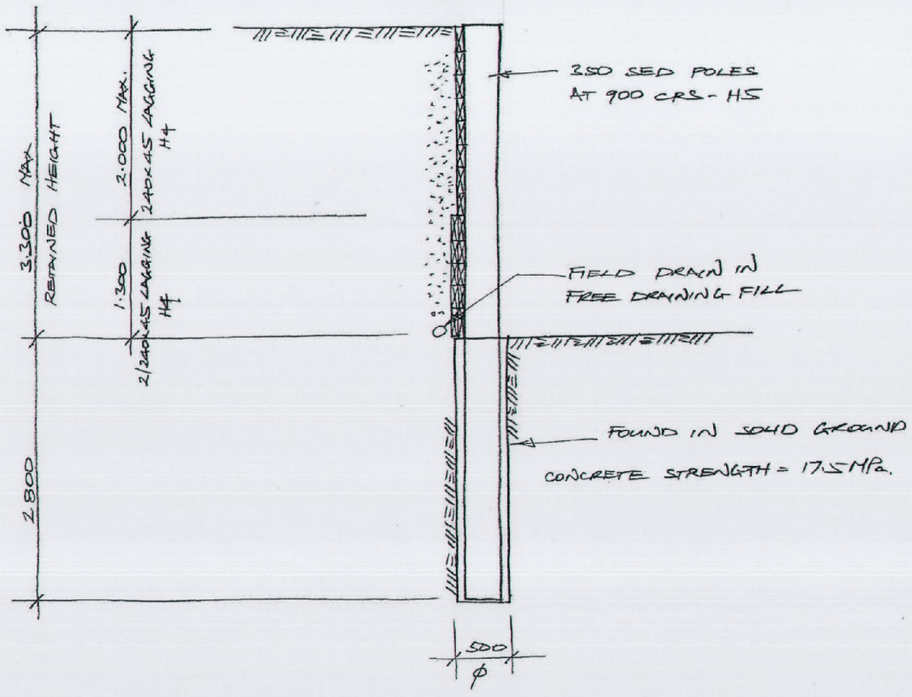

3.3m RETAINING WALL

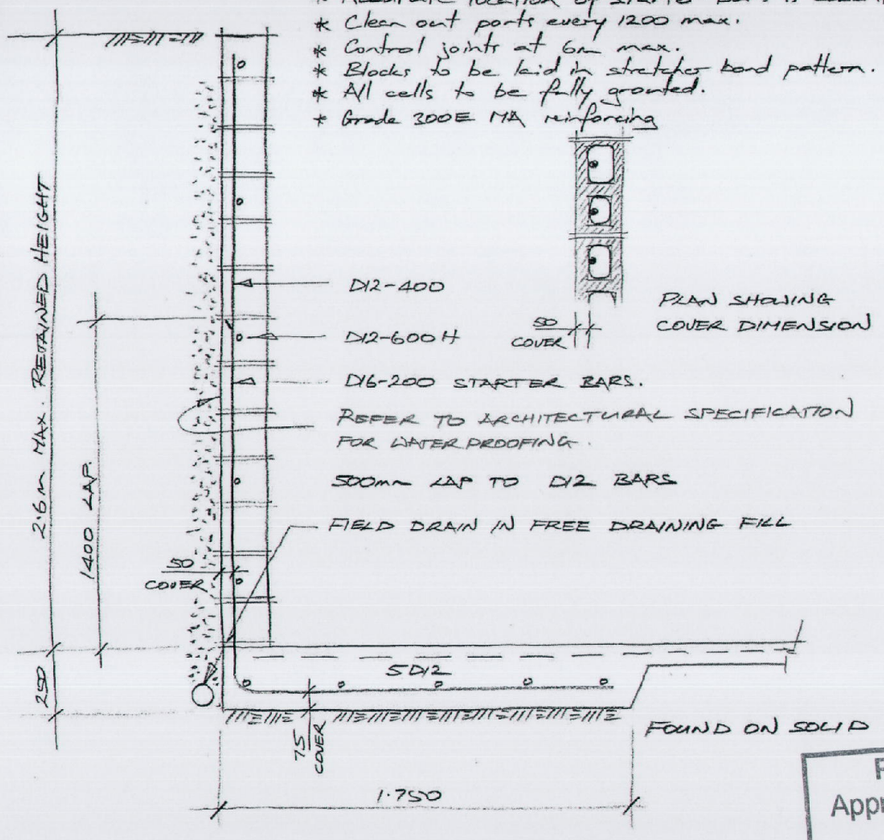

CANTILEVERED MASONRY WALL

200 SERIES BLOCK WORK:

* All work by expert blocklayer in accordance with NZS 4210
* Accurate location of starter bars is essential
* Clean out ports every 1200 max.
* Control joints at 6m max.
* Blocks to be laid in stretcher bond pattern.
* All cells to be fully grouted.
* Grade 300E MA reinforcing

Porirua City Council
Approved Consent Document
24 NOV 2017
05 60/17
BCA Number
David Nolan
On behalf of Porirua City Council

53 BANKS BOULEVARD

STRUCTURAL DETAILS

1721/SK1 A.

24/6/17 DN

A. 15/7/17 Retained height amended.

53 BANKS BOULEVARD

STRUCTURAL DETAILS

1721/SK2

24/6/17 DN

Aartra
Design and Draughting

Aaran Judd B.Des (Int)
583 Paremata Haywards Road, RD1 Porirua, 5381
P 2377 919 F 2377 920 M 027 2345 672
LBP 108509

These drawings to be read in conjunction with the specification.
Use figured dimensions only.
Contractor to verify all dimensions prior to commencement of work.
Any doubt, ambiguity or omission of any part of the drawing or the specifications shall be referred to the designer for clarification prior to commencement of work.
Submit shop drawings of all assemblies for review prior to manufacture

Issue	Date	Description	Apd

Project: TIMMINS HOUSE
ROPOSED NEW DWELLING
53 BANKS BOULEVARD
WHITBY

Dwg Title: ENGINEERING

Purpose: BUILDING CONSENT

Date 19-Oct-17	Earthquake 3	Drawn A.K.J.	
Scale 1:10	Wind - H		
Job No. 1716	Exposure C		
Dwg No. A1-28		Issue A	

200 SERIES BLOCKWORK:

* All work by expert blocklayer in accordance with NZS4210
* Accurate location of starter bars is essential
* Clean out ports every 1200 max.
* Control joints (with densotape) at 6m max
* Blocks to be laid in stretcher bond
* All cells to be fully grouted.
* Grade 300E MA reinforcing

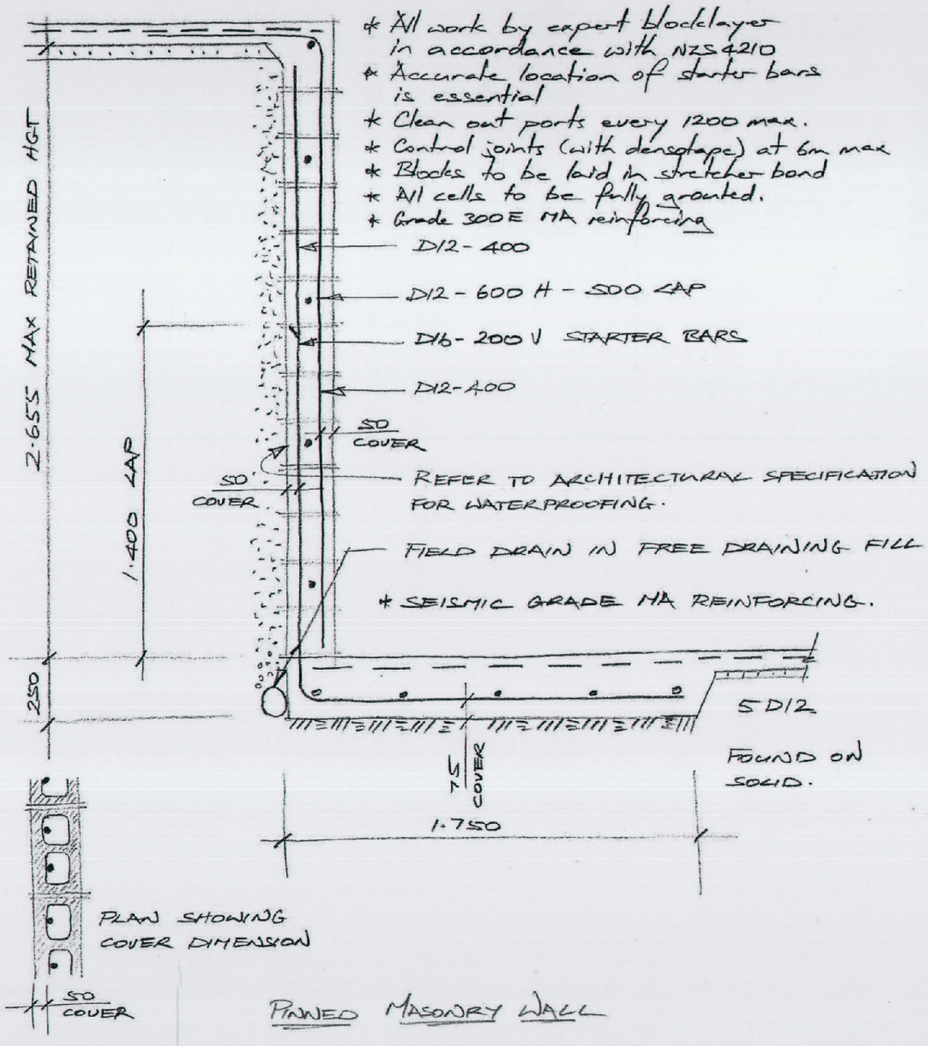

PINNED MASONRY WALL

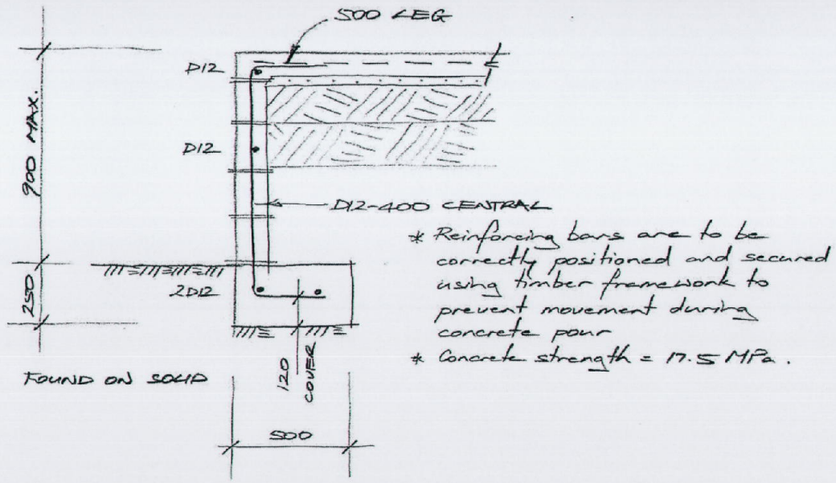

* Reinforcing bars are to be correctly positioned and secured using timber framework to prevent movement during concrete pour
* Concrete strength = 17.5 MPa.

ISO SERIES BLOCKWORK

- All work by expert blocklayer in accordance with NZS4210
- Clean out ports every 1200mm max.
- Control joints with densotape on horizontal bars at 6m max.
- Reinforcing to be seismic grade 300E MA
- Blocks to be laid in stretcher bond pattern
- All cells to be fully grouted.

FOUNDATION WALL

Porirua City Council
Approved Consent Document
24 NOV 2017
0560/17
BCA Number
David Nolan
On behalf of Porirua City Council

53 BANKS BOULEVARD — 1721/SK3A.

STRUCTURAL DETAILS — 24/6/17 DN

A. 9/7/17 retained height

53 BANKS BOULEVARD — 1721/SK4

STRUCTURAL DETAILS — 24/6/17 DN

Aartra
Design and Draughting

Aaran Judd B.Des (Int)
583 Paremata Haywards Road, RD1 Porirua, 5381
P 2377 919 F 2377 920 M 027 2345 672
LBP 108509

These drawings to be read in conjunction with the specification.
Use figured dimensions only.
Contractor to verify all dimensions prior to commencement of work.
Any doubt, ambiguity or omission of any part of the drawing or the specifications shall be referred to the designer for clarification prior to commencement of work.
Submit shop drawings of all assemblies for review prior to manufacture

Issue	Date	Description	Apd

Project: TIMMINS HOUSE
ROPOSED NEW DWELLING
53 BANKS BOULEVARD
WHITBY

Dwg Title: ENGINEERING

Purpose: BUILDING CONSENT

Date 19-Oct-17	Earthquake 3	Drawn A.K.J.	
Scale 1:10	Wind H		
Job No. 1716	Exposure C		
Dwg No. A1-29		Issue A	

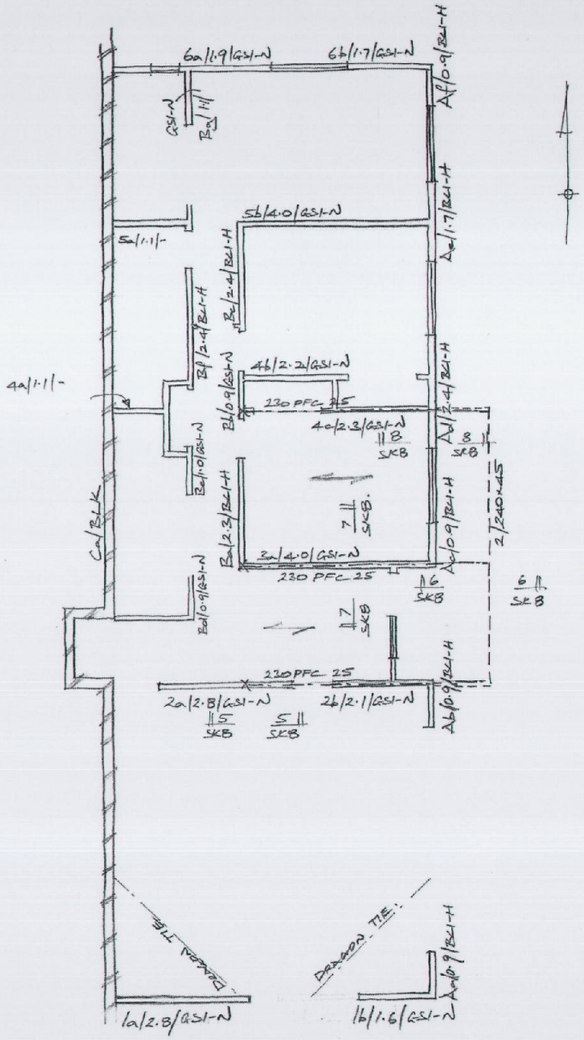

LOWER LEVEL PLAN

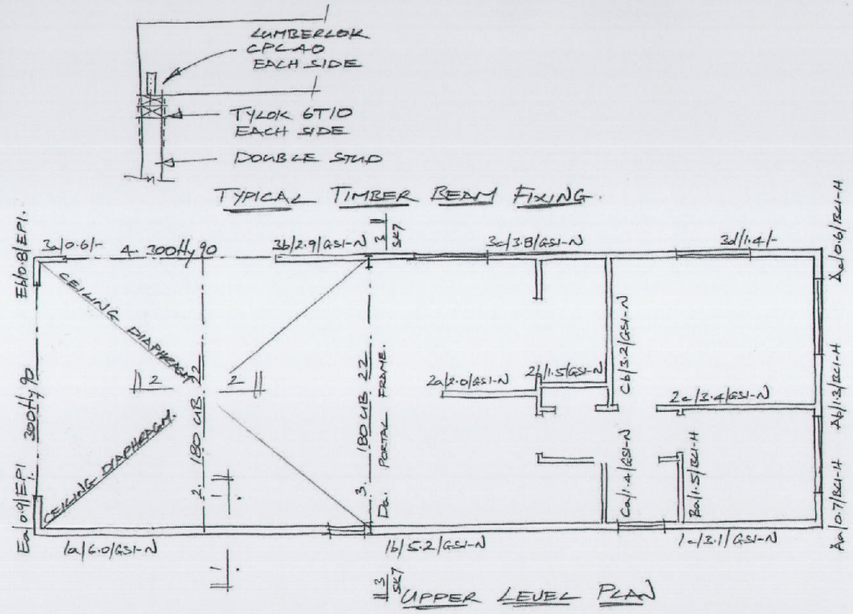

UPPER LEVEL PLAN

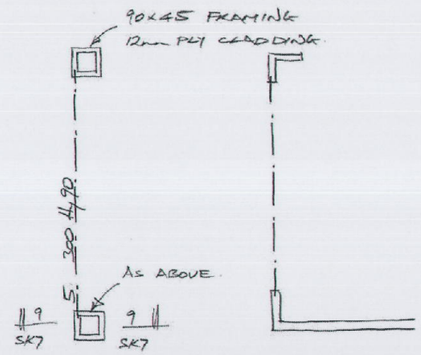

VERANDAH PLAN

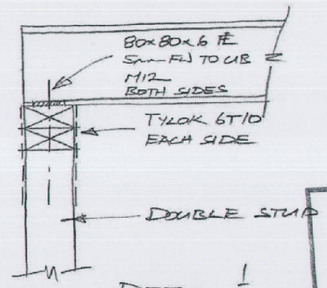

DETAIL 1

Porirua City Council
Approved Consent Document
24 NOV 2017
0560/17
BCA Number
David Nolan
On behalf of Porirua City Council

53 BANKS BOULEVARD

STRUCTURAL DETAILS

1721/SK5 B

26/6/17 RJ

A. 1/8/17 Bracing 4a + 4b amended.
B 2/8/17 Bracing 1a + 1b amended.

53 BANKS BOULEVARD

STRUCTURAL DETAILS

1721/SK6 B.

27/6/17 RJ

A. 3/7/17 Dragon ties replaced with ceiling diaphragm
B. 15/7/17 Footing detail added.

Aartra
Design and Draughting

Aaran Judd B.Des (Int)
583 Paremata Haywards Road, RD1 Porirua, 5381
P 2377 919 F 2377 920 M 027 2345 672
LBP 108509

These drawings to be read in conjunction with the specification.
Use figured dimensions only.
Contractor to verify all dimensions prior to commencement of work.
Any doubt, ambiguity or omission of any part of the drawing or the specifications shall be referred to the designer for clarification prior to commencement of work.
Submit shop drawings of all assemblies for review prior to manufacture

Issue	Date	Description	Apd

Project
TIMMINS HOUSE
ROPOSED NEW DWELLING
53 BANKS BOULEVARD
WHITBY

Dwg Title
ENGINEERING

Purpose
BUILDING CONSENT

Date 19-Oct-17	Earthquake 3	Drawn A.K.J.	
Scale 1:10	Wind - H		
Job No. 1716	Exposure C		
Dwg No. A1-30		Issue A	

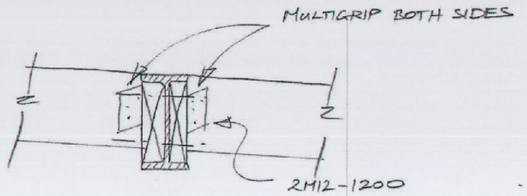

DETAIL 2/SK6

KNEE JOINT PROCEDURE:
- Cut and grind UBs to shape
- Butt weld webs, grind flush.
- 6mm FW 10mm plate stiffener to web
- Butt weld flanges + stiffener plates

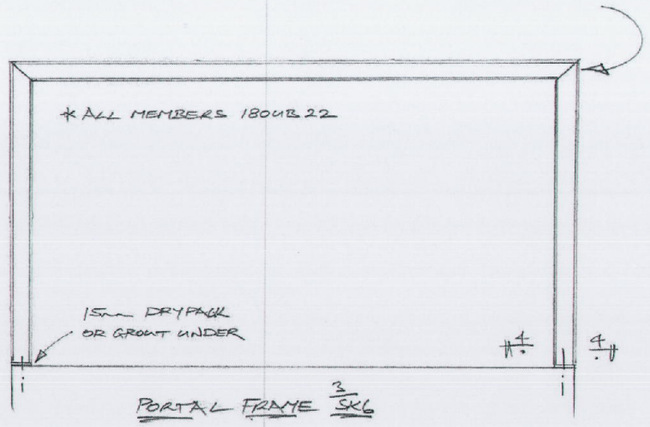

PORTAL FRAME 3/SK6

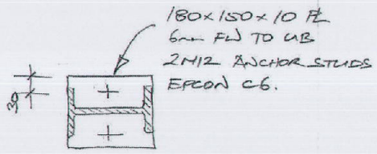

DETAIL 4/SK6

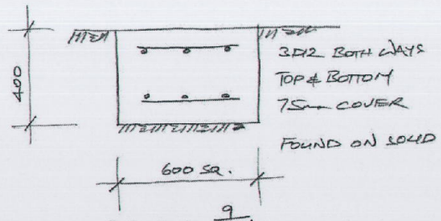

DETAIL 9/SK6

53 BANKS BOULEVARD

STRUCTURAL DETAILS

1721/SK7 A.

1/7/17 DJ

A. 15/7/17 Footing detail added.

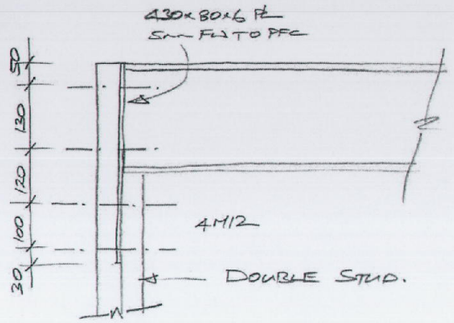

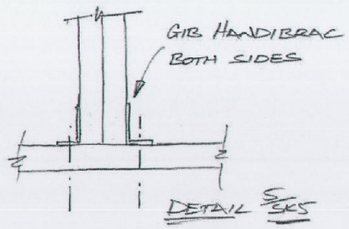

DETAIL 5/SK5

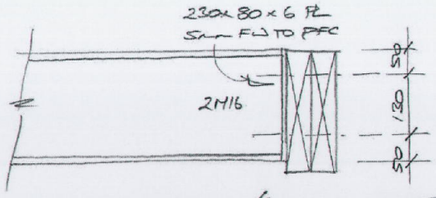

DETAIL 6/SK5

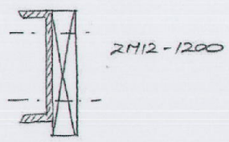

DETAIL 7/SK5

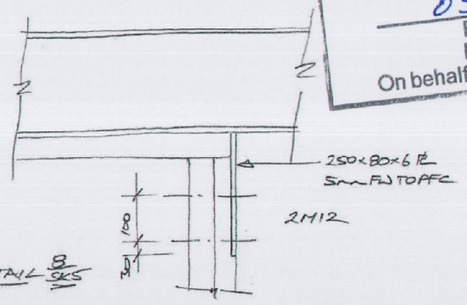

DETAIL 8/SK5

53 BANKS BOULEVARD

STRUCTURAL DETAILS

1721/SK8

1/7/17 DJ

Porirua City Council
Approved Consent Document
24 NOV 2017
0560/17
BCA Number
David Nolan
On behalf of Porirua City Council

Aartra
Design and Draughting

Aaran Judd B.Des (Int)
583 Paremata Haywards Road, RD1 Porirua, 5381
P 2377 919 F 2377 920 M 027 2345 672
LBP 108509

These drawings to be read in conjunction with the specification.
Use figured dimensions only.
Contractor to verify all dimensions prior to commencement of work.
Any doubt, ambiguity or omission of any part of the drawing or the specifications shall be referred to the designer for clarification prior to commencement of work.
Submit shop drawings of all assemblies for review prior to manufacture

Issue	Date	Description	Apd

Project
TIMMINS HOUSE
ROPOSED NEW DWELLING
53 BANKS BOULEVARD
WHITBY

Dwg Title
ENGINEERING

Purpose
BUILDING CONSENT

Date 19-Oct-17	Earthquake 3	Drawn A.K.J.	
Scale 1:10	Wind - H		
Job No. 1716	Exposure C		
Dwg No. A1-31		Issue A	

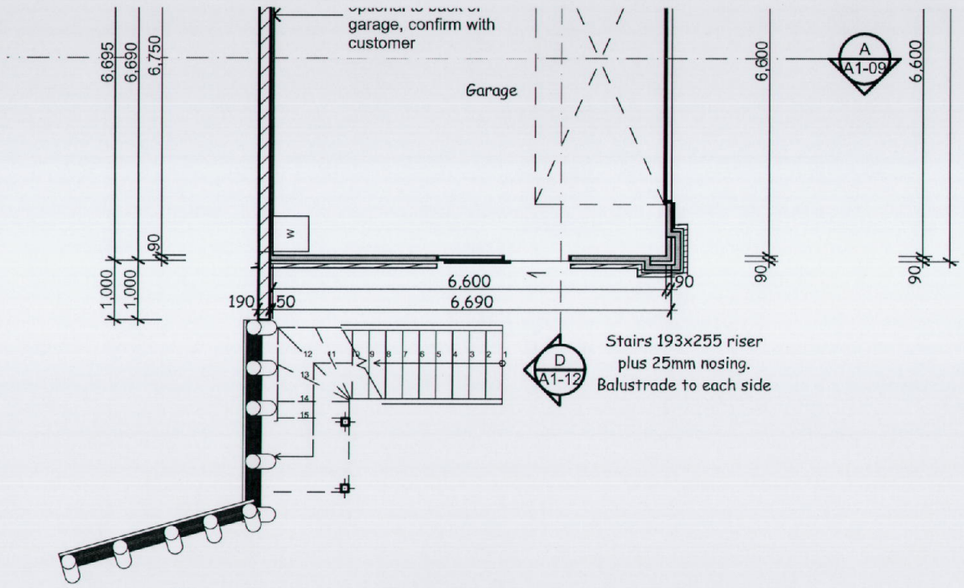

1 / - Proposed Lower Floor Plan
1:100

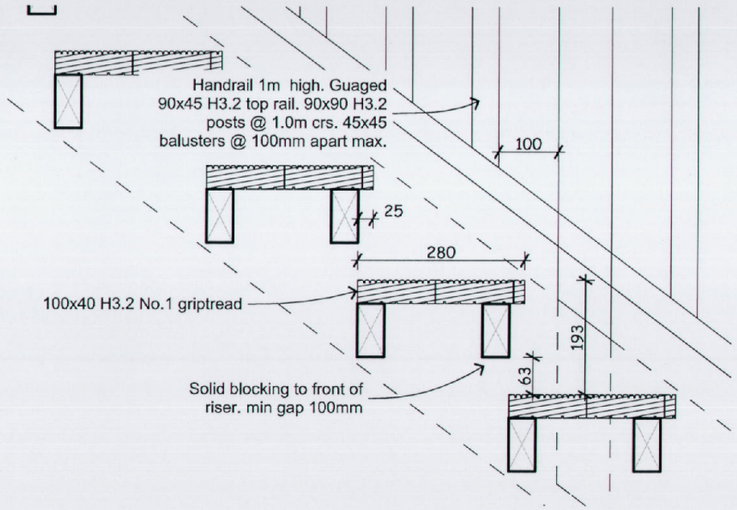

Porirua City Council
Approved Consent Document
24 NOV 2017
0560/17
BCA Number
David Nolan
On behalf of Porirua City Council

Aartra
Design and Draughting

Aaran Judd B.Des (Int)
583 Paremata Haywards Road, RD1 Porirua, 5381
P 2377 919 F 2377 920 M 027 2345 672
LBP 108509

These drawings to be read in conjunction with the specification.
Use figured dimensions only.
Contractor to verify all dimensions prior to commencement of work.
Any doubt, ambiguity or omission of any part of the drawing or the specifications shall be referred to the designer for clarification prior to commencement of work.
Submit shop drawings of all assemblies for review prior to manufacture

Issue	Date	Description	Apd

Project
TIMMINS HOUSE
ROPOSED NEW DWELLING
53 BANKS BOULEVARD
WHITBY

Dwg Title
EXTERIOR STAIR

Purpose
BUILDING CONSENT

Date 19-Oct-17	Earthquake 3	Drawn A.K.J.	
Scale 1:100, 1:10	Wind - H		
Job No. 1716	Exposure C		
Dwg No. A1-32		Issue A	

LU0143/17 - RC7436
Matthew Read
mread@pcc.govt.nz
04 237 5089

19 September 2017

D Timmins, J Timmins
146 Kahu Road
Paremata
Porirua 5024

Dear David and Josie,

APPLICATION FOR RESOURCE CONSENT TO CONSTRUCT A NEW DWELLING AT 53 BANKS BOULEVARD, WHITBY (BEING LOT 850 DP 496906).

I refer to your application for resource consent as described above.

The application was considered under delegated authority on 18 September 2017 and the following decision was made:

Pursuant to Rule D3.1.4(i) and Permitted Activity Standard D3.2.1 of the Operative Porirua City District Plan, together with Sections 95A, 95D, 95E, 104, 104B and 108 of the Resource Management Act 1991, the Porirua City Council **grants** to Dave and Josie Timmins, Discretionary Activity Land Use Consent to construct a new dwelling with associated earthworks, that does not comply with the Permitted Activity Standards relating to Earthworks and Yards as listed in the schedule below, at 53 Banks Boulevard (Lot 850 DP 496906). The property is zoned Suburban in the Porirua City District Plan.

Requirement Porirua City District Plan	**Consent**
Permitted activity standards (iii) Earthworks (a) Earthworks, in a 12 month period, shall not exceed: (ii) 100m2 in area (iii) 1.5 metres in height or depth. (c) Earthworks within a yard shall not exceed a height recession plane measured at an angle of 45 degrees from the closest boundary into the site (viii) Height recession plane All buildings must be within a building envelope of 3m height and a vertical angle of 45 degrees. into the site, measured at right angles from any point along the boundary of the site with any other site in the Zone. (xxii) Yards The minimum yard requirements for any site shall be:	The proposal includes a maximum height of fill earthworks of 3.5m. This is located behind a retaining wall that is also up to 3.5m high. Depth of cut is up to 1.1m. The proposal includes 133m^2 excavation and 100m^2 fill earthworks outside 2m building platform. A fence of 1.8m is proposed on top of retaining wall, which breaches the Height Recession Plane by approximately 0.4m near the boundary with 55 Banks Boulevard. The retaining wall at the south of the site are located within the Other Yard of 51 and 59 Banks Boulevard, and the associated earthworks there breach the 45 degree Height Recession Plane.

(c) Other yards: Minimum other yard – 1.5m	

Consent is granted for the following reasons:

a. The non-compliance with Other Yards, Height Recession Plane, Earthworks Height Recession Plane and Earthworks greater than 1.5m in height will result in visual, privacy and/or shading effects on neighbouring properties of 51, 55 and 59 Banks Boulevard. However, the owners of these properties have given written approval so the effects on these parties can be disregarded.

b. David Nolan of Building Compliance has advised that the proposed structure (retaining wall) will comfortably comply with item 9 of Consent Notice for Safe Electrical Distances in regard to clearance from the overhead National Grid transmission line. Likewise, the proposal complies with item 8 of Consent Notice for structures greater than $10m^2$ being 12m distant from centreline of National Grid transmission line.

c. The applicant has amended their application to not adversely affect the Council's surface water easement and the overland flow path through their site.

d. Compliance with item 7 of the Consent Notice will be assessed at the time a Building Consent is lodged.

e. Council's Principal Advisor of Land Use and Subdivision Engineering (PALSE) has advised that the PS1 supplied for retaining wall is suitably designed providing additional bracing, weather protection and stability to the subdivision batter and that together with a condition for an engineer's oversight of earthworks item 1 of the Consent Notice is complied with. Remaining aspects of item 1 of the Consent Notice will be assessed at Building Consent stage.

f. Council's PALSE has advised that applicant's Silt Management plan, together a silt fence located along the front boundary and returning up the boundary with Lot 851 (51 Banks Boulevard) to the toe of the batter, will prevent any silt laden water from running off the site into drains and waterways. Subject to standard earthworks conditions I concur with this evaluation.

g. Council's PALSE has advised that the fill will not require compaction due to the fill either being located within the National Grid Yard or being too small an area in close proximity to the retaining wall.

h. The proposal's very high retaining wall and fence on top of it has potential effects on the streetscape. However, Council's Landscape Architect has advised that he has no concerns in this regard due to the 11m setback of the wall from the road and the angle of enclosure. Accordingly he does not recommend a planting plan. I concur with this evaluation.

i. The proposal complies with conditions 2-4 of the Consent Notice in regard to the road frontage boundary and condition 5 in regard to vehicle crossings.

j. Due regard has been given to the objectives and policies of the District Plan and it is not inconsistent with those provisions.

k. Due regard has been given to any national policy statement, the New Zealand Coastal Policy Statement, any regional policy statement, Part 2 of the RMA, and any other matters Council considers relevant and reasonably necessary to determine this application, and deemed that there are no matters of particular relevance or concern that require address.

That this consent be subject to the following conditions:

1. That the development be in general accordance with the information and plans submitted with the application and held on Council file RC7436 and stamped 'Approved Plans for Resource Consent RC7436' (ref: Aartra Design and Drafting; Job 1716; Drawings A0-01A, A0-02A, A0-03A, A0-04A, A0-05A and A0-06A), although minor alterations may be approved upon request providing the development is not materially different, the scale and intensity of adverse effects will be no greater, and no approval from affected persons is needed.

2. That the consent holder shall contact the Council's compliance monitoring officer at least 48 hours prior to any physical work commencing on the site and advise the officer of the date upon which such works will commence.

3. The consent holder shall provide a copy of this consent and any documents referred to in this consent to each operator or contractor undertaking works authorised by this consent, before that operator or contractor starts any works.

4. The consent holder shall ensure that a copy of this consent is kept in the office on site at all times and presented to any Porirua City Council officer on request.

Prior to commencement

5. Prior to the commencement of any works on the site, the applicant shall provide evidence to the Resource Consent Monitoring and Enforcement Team that a suitably qualified chartered engineer has been appointed to carry out the design, monitoring and certification of earthworks.

6. The consent holder shall ensure that prior to the commencement of any works on the site that all silt and sediment control measures are in place in accordance with the Silt Management Plan (submitted with the application). The silt fence shall be run along the front boundary of the site (less the site access) and return up the boundary with Lot 851 (51 Banks Boulevard) to the toe of the batter.

During construction

7. The consent holder shall take all practicable steps to ensure that all storm water run-off from the site is treated so that sediment is retained on site and the discharge does not cause adverse effects on the environment by entering either the kerb and channel, the storm water system, or a natural watercourse.

8. Land disturbed by earthworks, trenching or building activities shall be regularly wetted to ensure that dust nuisance is maintained within the site.

9. The consent holder shall generally conform to the Wellington Regional Council 'Small Earthworks – Erosion and Sediment Control for small sites' (June, 2006), when designing sediment control options for the earthworks on the site.

   Note: Porirua Council's minimum expectations for erosion and sediment control on all small building sites across the City can be seen at: http://www.pcc.govt.nz/A-Z-Services/Resource-Consents/Silt-and-Sediment-Control/Small-Building-Sites-Minimum-Erosion-and-Sediment-Control-Requirements

   Please read these pages prior to commencing any works on the site.

10. If earth worked materials are carried onto the surrounding road network, the consent holder shall be responsible for cleaning and repairing the road back to its original condition each evening during the earthworks period. In doing this, the consent holder shall ensure that no materials are washed or swept into any stormwater drains or natural drainage systems.

Upon completion of works

11. All areas exposed by earthworks, trenching or building activities are to be re-grassed/hydro-seeded at the earliest possible opportunity following excavation or at the latest within 1 month after completion of the earthworks.

THE APPLICANT IS TO NOTE:

Section 357

Under section 357 of the Resource Management Act 1991 you have the right to object in writing to all or part of this decision. Notice of this objection must be received by the Council within 15 working days of your receipt of this decision letter.

Building Act

This is NOT a Building Consent. The Building Act 2004 contains provisions relating to the construction, alteration, and demolition of buildings. The Act requires building consents to be obtained where relevant, and for all such work to comply with the building code.

Section 125

This consent is subject to section 125 of the Resource Management Act 1991 which states that a resource consent lapses on the expiry of 5 years after the commencement of the consent, unless an extension on time is granted by the Council prior to lapsing of the consent.

Fees and charges

Should any additional fees charged for the processing of this application or any financial contributions, levies or bonds required by conditions of this consent not be paid within the deadlines set either through invoicing or consent conditions, this could ultimately lead to Council seeking to recover money owed through the debt collection agency. Should the need arise to use a debt collection agency then the consent holder will be liable for and charged any extra expense that the debt collection service incurs.

Traffic Management Plan

If the intended work that is covered by this consent includes any activities within the road reserve, then a Temporary Traffic Management Plan is to be prepared by a person who is certified in accordance with 'Temporary Traffic Management for Local Roads – Supplement to NZTA COPTTM', and submitted to the Manager Roading for review and approval before any physical works within the road reserve are started.

Private Covenants

This resource consent does not excuse you of any legal obligations that you may have to comply with any private (non-Council related) covenants that apply to your property. If there are any Private Covenants relevant to your property these will be listed on your Computer Freehold Register (formerly known as a Certificate of Title). These covenants may place restrictions on developments and activities that can be undertaken on your property. Please check your computer freehold register and the content of any covenants to see if there are any restrictions relevant to your proposal. Copies of your Computer Freehold Register and any private covenants that may apply can be obtained through Land Information New Zealand.

All relevant documents can be viewed at the Council's office, please find the full planning report attached.

Yours sincerely

Matthew Read
RESOURCE CONSENTS PLANNER
for **MANAGER RESOURCE CONSENTS**

PCC #5154531

NON-NOTIFIED LAND USE CONSENT
DISCRETIONARY ACTIVITY
DAVE AND JOSIE TIMMINS
53 BANKS BOULEVARD (LOT 850 DP 496906)
PORIRUA

RC7436 – LU0143/17

Pursuant to Rule D3.1.4(i) and Permitted Activity Standard D3.2.1 of the Operative Porirua City District Plan, together with Sections 95A, 95D, 95E, 104, 104B and 108 of the Resource Management Act 1991, the Porirua City Council **grants** to Dave and Josie Timmins, Discretionary Activity Land Use Consent to construct a new dwelling with associated earthworks, that does not comply with the Permitted Activity Standards relating to Earthworks and Yards as listed in the schedule below, at 53 Banks Boulevard (Lot 850 DP 496906). The property is zoned Suburban in the Porirua City District Plan.

Requirement Porirua City District Plan	**Consent**
Permitted activity standards (iii) Earthworks (a) Earthworks, in a 12 month period, shall not exceed: (ii) 100m2 in area (iii) 1.5 metres in height or depth. (c) Earthworks within a yard shall not exceed a height recession plane measured at an angle of 45 degrees from the closest boundary into the site (viii) Height recession plane All buildings must be within a building envelope of 3m height and a vertical angle of 45 degrees. into the site, measured at right angles from any point along the boundary of the site with any other site in the Zone. (xxii) Yards The minimum yard requirements for any site shall be: (c) Other yards: Minimum other yard – 1.5m	The proposal includes a maximum height of fill earthworks of 3.5m. This is located behind a retaining wall that is also up to 3.5m high. Depth of cut is up to 1.1m. The proposal includes 133m^2 excavation and 100m^2 fill earthworks outside 2m building platform. A fence of 1.8m is proposed on top of retaining wall, which breaches the Height Recession Plane by approximately 0.4m near the boundary with 55 Banks Boulevard. The retaining wall at the south of the site are located within the Other Yard of 51 and 59 Banks Boulevard, and the associated earthworks there breach the 45 degree Height Recession Plane.

Consent is granted for the following reasons:

a. The non-compliance with Other Yards, Height Recession Plane, Earthworks Height Recession Plane and Earthworks greater than 1.5m in height will result in visual, privacy and/or shading effects on neighbouring properties of 51, 55 and 59 Banks Boulevard.

However, the owners of these properties have given written approval so the effects on these parties can be disregarded.

b. David Nolan of Building Compliance has advised that the proposed structure (retaining wall) will comfortably comply with item 9 of Consent Notice for Safe Electrical Distances in regard to clearance from the overhead National Grid transmission line. Likewise, the proposal complies with item 8 of Consent Notice for structures greater than $10m^2$ being 12m distant from centreline of National Grid transmission line.

c. The applicant has amended their application to not adversely affect the Council's surface water easement and the overland flow path through their site.

d. Compliance with item 7 of the Consent Notice will be assessed at the time a Building Consent is lodged.

e. Council's Principal Advisor of Land Use and Subdivision Engineering (PALSE) has advised that the PS1 supplied for retaining wall is suitably designed providing additional bracing, weather protection and stability to the subdivision batter and that together with a condition for an engineer's oversight of earthworks item 1 of the Consent Notice is complied with. Remaining aspects of item 1 of the Consent Notice will be assessed at Building Consent stage.

f. Council's PALSE has advised that applicant's Silt Management plan, together a silt fence located along the front boundary and returning up the boundary with Lot 851 (51 Banks Boulevard) to the toe of the batter, will prevent any silt laden water from running off the site into drains and waterways. Subject to standard earthworks conditions I concur with this evaluation.

g. Council's PALSE has advised that the fill will not require compaction due to the fill either being located within the National Grid Yard or being too small an area in close proximity to the retaining wall.

h. The proposal's very high retaining wall and fence on top of it has potential effects on the streetscape. However, Council's Landscape Architect has advised that he has no concerns in this regard due to the 11m setback of the wall from the road and the angle of enclosure. Accordingly he does not recommend a planting plan. I concur with this evaluation.

i. The proposal complies with conditions 2-4 of the Consent Notice in regard to the road frontage boundary and condition 5 in regard to vehicle crossings.

j. Due regard has been given to the objectives and policies of the District Plan and it is not inconsistent with those provisions.

k. Due regard has been given to any national policy statement, the New Zealand Coastal Policy Statement, any regional policy statement, Part 2 of the RMA, and any other matters Council considers relevant and reasonably necessary to determine this application, and deemed that there are no matters of particular relevance or concern that require address.

That this consent be subject to the following conditions:

1. That the development be in general accordance with the information and plans submitted with the application and held on Council file RC7436 and stamped 'Approved Plans for Resource Consent RC7436' (ref: Aartra Design and Drafting; Job 1716; Drawings A0-01A, A0-02A, A0-03A, A0-04A, A0-05A and A0-06A), although minor alterations may be approved upon request providing the development is not materially different, the scale and intensity of adverse effects will be no greater, and no approval from affected persons is needed.

2. That the consent holder shall contact the Council's compliance monitoring officer at least 48 hours prior to any physical work commencing on the site and advise the officer of the date upon which such works will commence.

3. The consent holder shall provide a copy of this consent and any documents referred to in this consent to each operator or contractor undertaking works authorised by this consent, before that operator or contractor starts any works.

4. The consent holder shall ensure that a copy of this consent is kept in the office on site at all times and presented to any Porirua City Council officer on request.

Prior to commencement

5. Prior to the commencement of any works on the site, the applicant shall provide evidence to the Resource Consent Monitoring and Enforcement Team that a suitably qualified chartered engineer has been appointed to carry out the design, monitoring and certification of earthworks.

6. The consent holder shall ensure that prior to the commencement of any works on the site that all silt and sediment control measures are in place in accordance with the Silt Management Plan (submitted with the application). The silt fence shall be run along the front boundary of the site (less the site access) and return up the boundary with Lot 851 (51 Banks Boulevard) to the toe of the batter.

During construction

7. The consent holder shall take all practicable steps to ensure that all storm water run-off from the site is treated so that sediment is retained on site and the discharge does not cause adverse effects on the environment by entering either the kerb and channel, the storm water system, or a natural watercourse.

8. Land disturbed by earthworks, trenching or building activities shall be regularly wetted to ensure that dust nuisance is maintained within the site.

9. The consent holder shall generally conform to the Wellington Regional Council 'Small Earthworks – Erosion and Sediment Control for small sites' (June, 2006), when designing sediment control options for the earthworks on the site.

   Note: Porirua Council's minimum expectations for erosion and sediment control on all small building sites across the City can be seen at: http://www.pcc.govt.nz/A-Z-Services/Resource-Consents/Silt-and-Sediment-Control/Small-Building-Sites-Minimum-Erosion-and-Sediment-Control-Requirements

   Please read these pages prior to commencing any works on the site.

10. If earth worked materials are carried onto the surrounding road network, the consent holder shall be responsible for cleaning and repairing the road back to its original condition each evening during the earthworks period. In doing this, the consent holder shall ensure that no materials are washed or swept into any stormwater drains or natural drainage systems.

Upon completion of works

11. All areas exposed by earthworks, trenching or building activities are to be re-grassed/hydro-seeded at the earliest possible opportunity following excavation or at the latest within 1 month after completion of the earthworks.

THE APPLICANT IS TO NOTE:

Section 357
Under section 357 of the Resource Management Act 1991 you have the right to object in writing to all or part of this decision. Notice of this objection must be received by the Council within 15 working days of your receipt of this decision letter.

Building Act
This is NOT a Building Consent. The Building Act 2004 contains provisions relating to the construction, alteration, and demolition of buildings. The Act requires building consents to be obtained where relevant, and for all such work to comply with the building code.

Section 125
This consent is subject to section 125 of the Resource Management Act 1991 which states that a resource consent lapses on the expiry of 5 years after the commencement of the consent, unless an extension on time is granted by the Council prior to lapsing of the consent.

Fees and charges
Should any additional fees charged for the processing of this application or any financial contributions, levies or bonds required by conditions of this consent not be paid within the deadlines set either through invoicing or consent conditions, this could ultimately lead to Council seeking to recover money owed through the debt collection agency. Should the need arise to use a debt collection agency then the consent holder will be liable for and charged any extra expense that the debt collection service incurs.

Traffic Management Plan
If the intended work that is covered by this consent includes any activities within the road reserve, then a Temporary Traffic Management Plan is to be prepared by a person who is certified in accordance with 'Temporary Traffic Management for Local Roads – Supplement to NZTA COPTTM', and submitted to the Manager Roading for review and approval before any physical works within the road reserve are started.

Private Covenants
This resource consent does not excuse you of any legal obligations that you may have to comply with any private (non-Council related) covenants that apply to your property. If there are any Private Covenants relevant to your property these will be listed on your Computer Freehold Register (formerly known as a Certificate of Title). These covenants may place restrictions on developments and activities that can be undertaken on your property. Please check your computer freehold register and the content of any covenants to see if there are any restrictions relevant to your proposal. Copies of your Computer Freehold Register and any private covenants that may apply can be obtained through Land Information New Zealand.

Matthew Read
RESOURCE CONSENTS PLANNER

18/9/17
Date

Richard Taylor
MONITORING AND ENFORCEMENT OFFICER

19/09/17
Date

Decision of Council

Pursuant to powers delegated to Manager- Resource Consents by the Porirua City Council at its meeting on 30th March 2016, consent is granted and subject to the conditions specified above.

Adrian Ramage
MANAGER RESOURCE CONSENTS
under Delegated Authority

18/9/17
Date