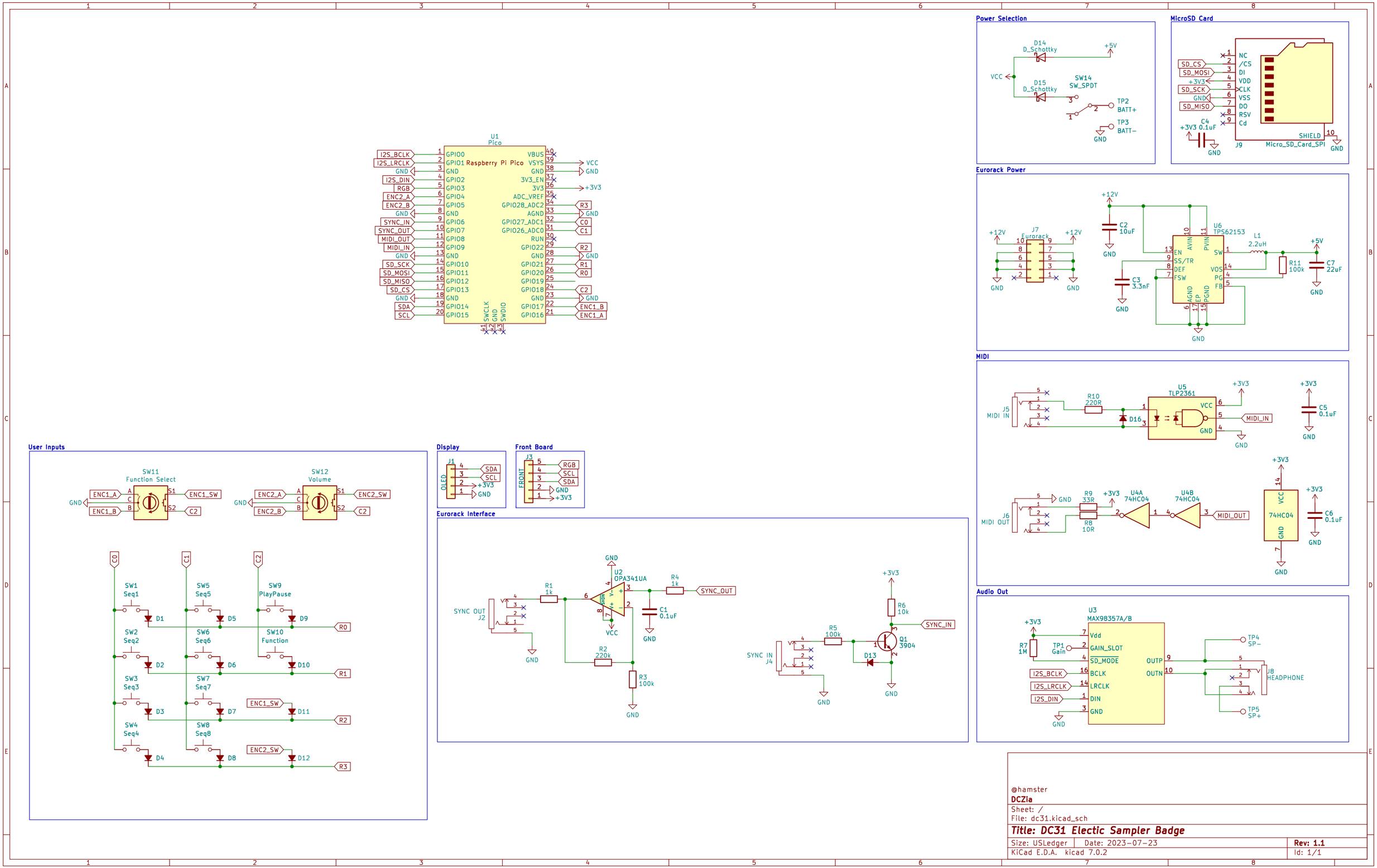

@hamster

DCZia

Sheet: /

File: dc31.kicad_sch

Title: DC31 Electic Sampler Badge

Size: USLedger	Date: 2023-07-23	**Rev: 1.1**
KiCad E.D.A. kicad 7.0.2		Id: 1/1