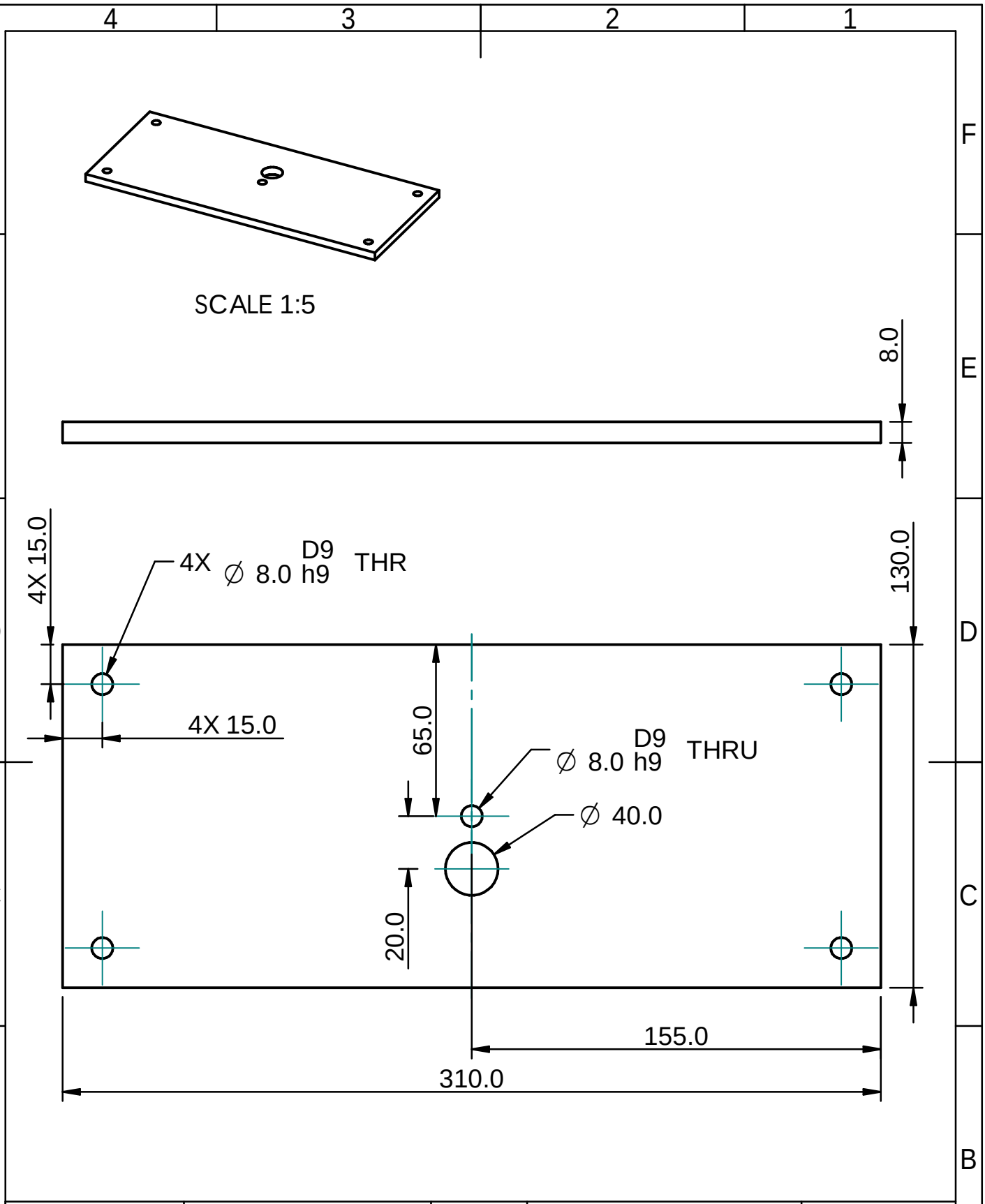

UNLESS OTHERWISE SPECIFIED: DIMENSIONS ARE IN MILLIMETERS SURFACE FINISH: TOLERANCES: LINEAR: ANGULAR:	FINISH:	DEBURR AND BREAK SHARP EDGES	DO NOT SCALE DRAWING / REVISION

	NAME	SIGNATURE	DATE
DRAWN			
CHK'D			
APPV'D			
MFG			
Q.A			

TITLE:
Slab 4
Quadruple-Tank Experimental Setup
DECENTER Project

MATERIAL: Acrylic

DWG NO. slab_4.pdf

A4

WEIGHT:

SCALE:1:2

SHEET 1 OF 1

SOLID EDGE ACADEMIC