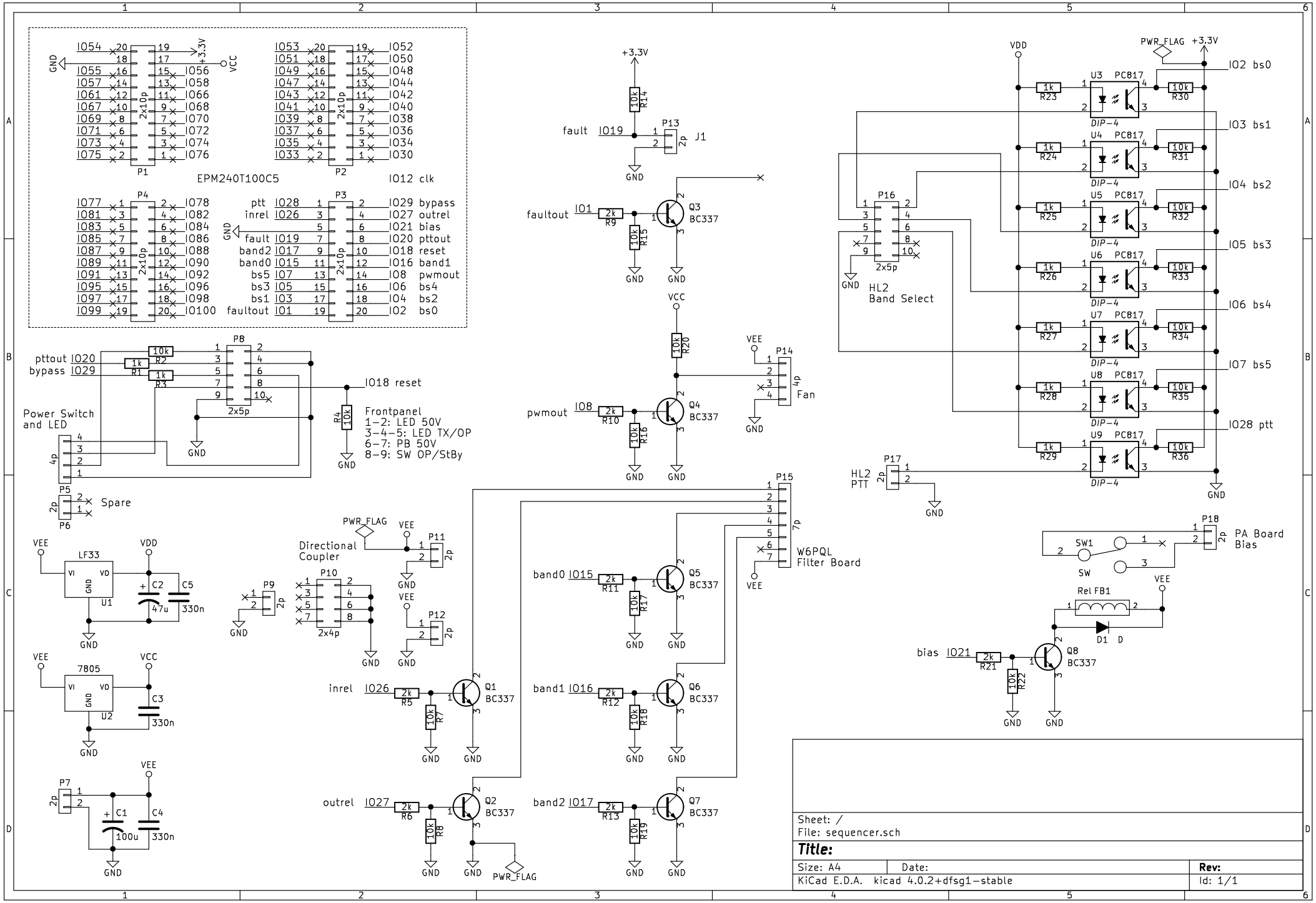
EPM240T100C5
P1
P2
P3
P4
P5
P6
P7
P8
P9
P10
P11
P12
P13
P14
P15
P16
P17
P18
J1
HL2
Band Select
HL2
PTT
Frontpanel
1-2: LED 50V
3-4-5: LED TX/OP
6-7: PB 50V
8-9: SW OP/StBy
Power Switch
and LED
Spare
Directional
Coupler
W6PQL
Filter Board
PA Board
Bias
Fan
LF33
7805
U1
U2
U3
U4
U5
U6
U7
U8
U9
PCB17
DIP-4
Q1
Q2
Q3
Q4
Q5
Q6
Q7
Q8
BC337
Rel FB1
D1
SW1
SW
PWR_FLAG
+3.3V
VDD
VCC
VEE
GND
pttout
bypass
fault
faultout
pwmout
inrel
outrel
band0
band1
band2
bias
reset
ptt
bs0
bs1
bs2
bs4
bs5
bs3
pwmout
bias
band1
band0
band2
clk
Sheet: /
File: sequencer.sch
Title:
Size: A4
Date:
Rev:
KiCad E.D.A. kicad 4.0.2+dfsg1-stable
Id: 1/1