ARE-SSR2 Seite 1

CODEC +
CONTROLLER

ARE-SSR2 Seite 1.sch

ARE-SSR2 Seite 2

MIXER

ARE-SSR2 Seite 2.sch

ARE-SSR2 Seite 3

BANDPASS

ARE-SSR2 Seite 3.sch

Sheet: /
File: ARE-SSR2.sch

Title:

Size: A4	Date: 13 dec 2018	**Rev:**
KiCad E.D.A. kicad 4.0.7		Id: 1/4

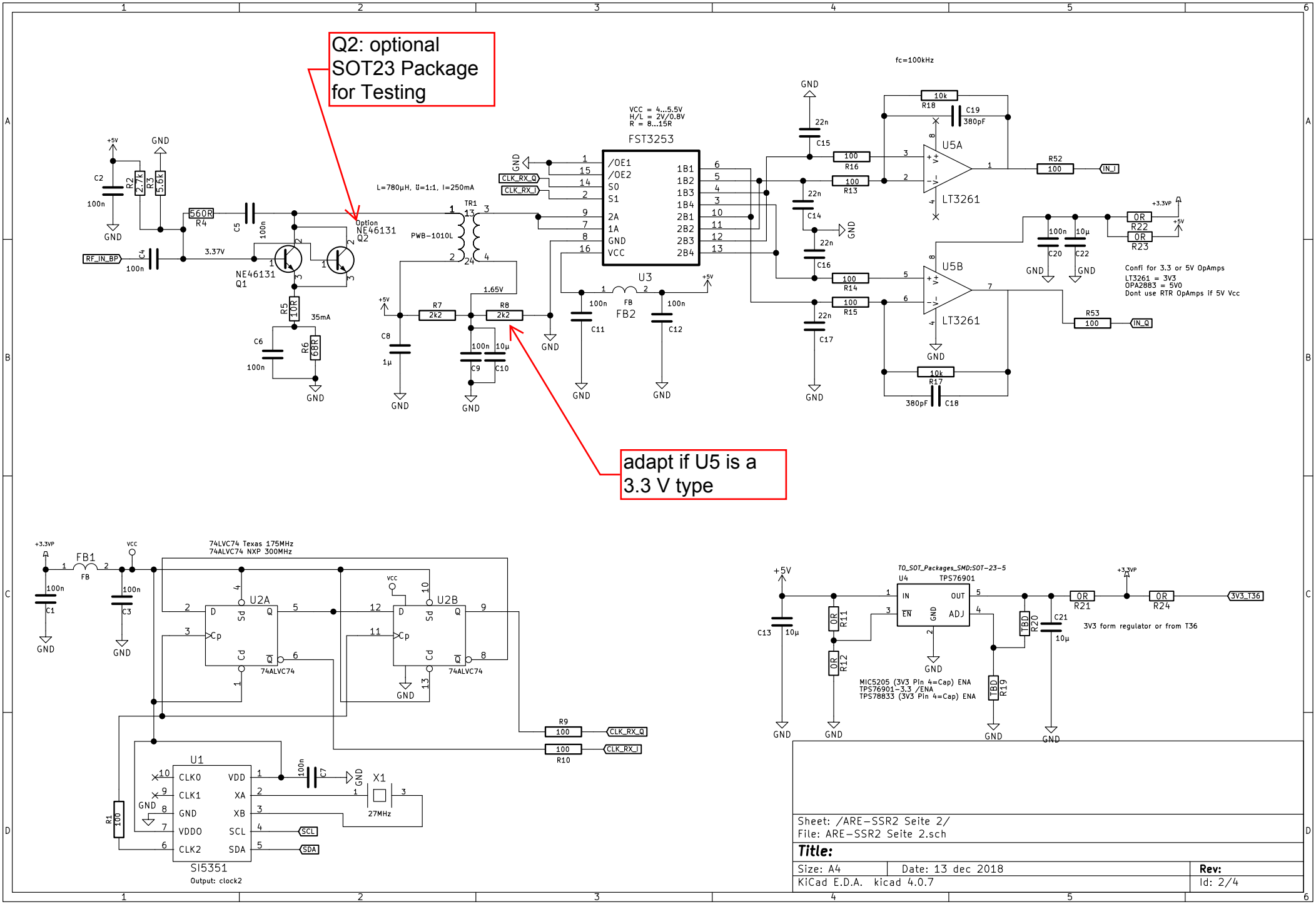
Q2: optional SOT23 Package for Testing
adapt if U5 is a 3.3 V type
FST3253
VCC = 4...5.5V
H/L = 2V/0.8V
R = 8...15R
/OE1
/OE2
S0
S1
2A
1A
GND
VCC
1B1
1B2
1B3
1B4
2B1
2B2
2B3
2B4
U3
FB2
U5A
U5B
LT3261
fc=100kHz
Confl for 3.3 or 5V OpAmps
LT3261 = 3V3
OPA2883 = 5V0
Dont use RTR OpAmps if 5V Vcc
L=780µH, Ü=1:1, I=250mA
TR1
PWB-1010L
Option
NE46131
Q2
NE46131
Q1
RF_IN_BP
CLK_RX_Q
CLK_RX_I
IN_I
IN_Q
3.37V
35mA
1.65V
74LVC74 Texas 175MHz
74ALVC74 NXP 300MHz
U2A
U2B
74ALVC74
U1
SI5351
Output: clock2
CLK0
CLK1
VDD
XA
XB
SCL
SDA
X1
27MHz
SCL
SDA
TO_SOT_Packages_SMD:SOT-23-5
U4
TPS76901
IN
OUT
EN
ADJ
MIC5205 (3V3 Pin 4=Cap) ENA
TPS76901-3.3 /ENA
TPS78833 (3V3 Pin 4=Cap) ENA
3V3 form regulator or from T36
3V3_T36
Sheet: /ARE-SSR2 Seite 2/
File: ARE-SSR2 Seite 2.sch
Title:
Size: A4
Date: 13 dec 2018
Rev:
KiCad E.D.A. kicad 4.0.7
Id: 2/4

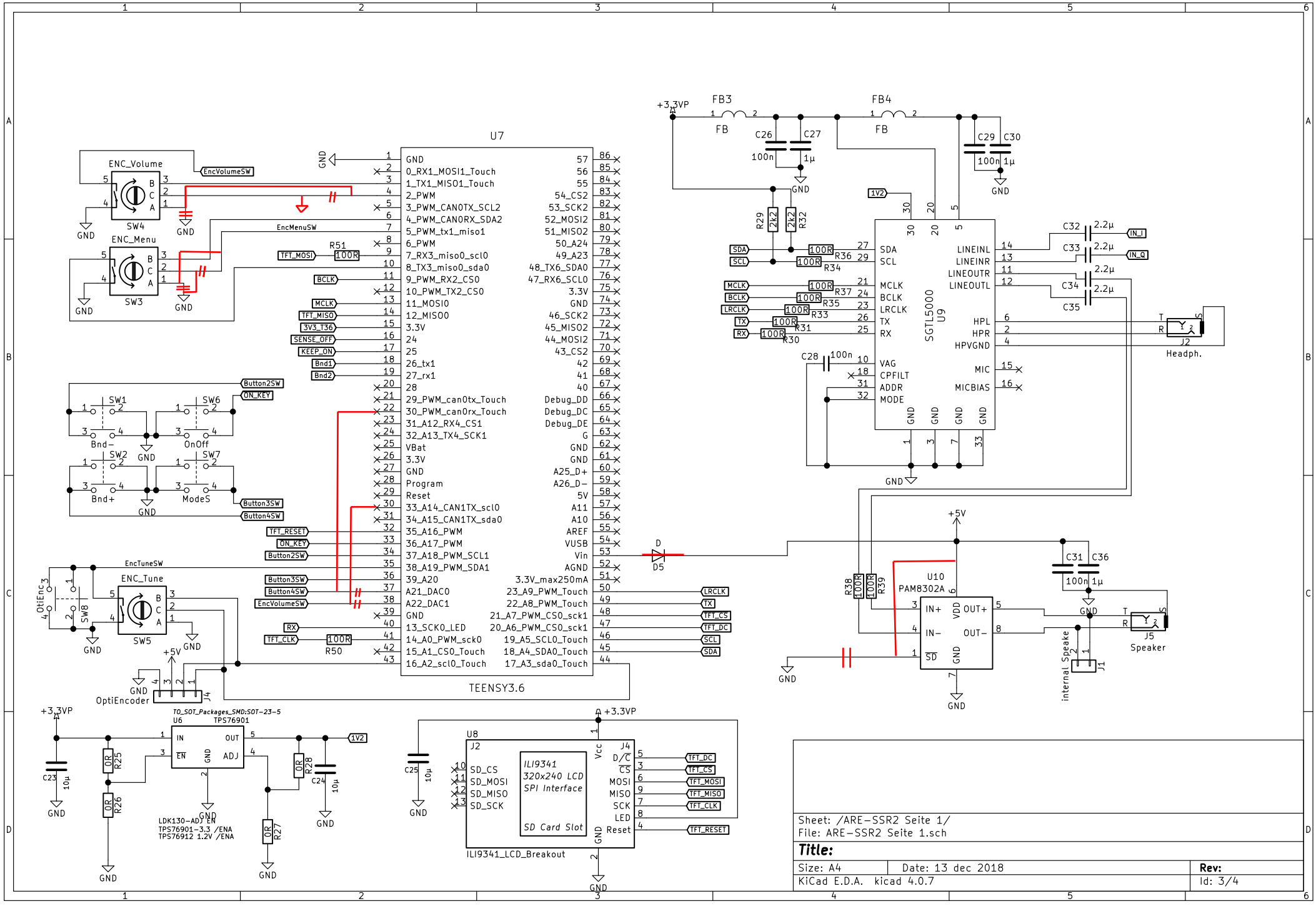
U7
TEENSY3.6
ENC_Volume
SW4
ENC_Menu
SW3
EncVolumeSW
EncMenuSW
R51
100R
TFT_MOSI
BCLK
MCLK
TFT_MISO
3V3_T36
SENSE_OFF
KEEP_ON
Bnd1
Bnd2
SW1
SW6
Bnd−
OnOff
SW2
SW7
Bnd+
ModeS
Button2SW
ON_KEY
Button3SW
Button4SW
TFT_RESET
EncTuneSW
ENC_Tune
SW5
SW8
OtiEnc
OptiEncoder
J4
RX
TFT_CLK
R50
LRCLK
TX
TFT_CS
TFT_DC
SCL
SDA
D
D5
+3.3VP
FB3
FB4
FB
C26
C27
C29
C30
100n
1µ
R29
2k2
R32
1V2
SGTL5000
U9
LINEINL
LINEINR
LINEOUTR
LINEOUTL
HPL
HPR
HPVGND
MIC
MICBIAS
VAG
CPFILT
ADDR
MODE
C28
C32
C33
C34
C35
2.2µ
IN_I
IN_Q
J2
Headph.
+5V
U10
PAM8302A
IN+
IN−
SD
VDD
OUT+
OUT−
R38
R39
C31
C36
J5
Speaker
internal Speake
J1
U6
TPS76901
TO_SOT_Packages_SMD:SOT-23-5
IN
EN
GND
OUT
ADJ
C23
10µ
R25
R26
R28
R27
C24
LDK130-ADJ EN
TPS76901-3.3 /ENA
TPS76912 1.2V /ENA
U8
J2
SD_CS
SD_MOSI
SD_MISO
SD_SCK
ILI9341
320x240 LCD
SPI Interface
SD Card Slot
J4
Vcc
D/C
CS
MOSI
MISO
SCK
LED
Reset
C25
ILI9341_LCD_Breakout
Sheet: /ARE−SSR2 Seite 1/
File: ARE−SSR2 Seite 1.sch
Title:
Size: A4
Date: 13 dec 2018
Rev:
KiCad E.D.A. kicad 4.0.7
Id: 3/4

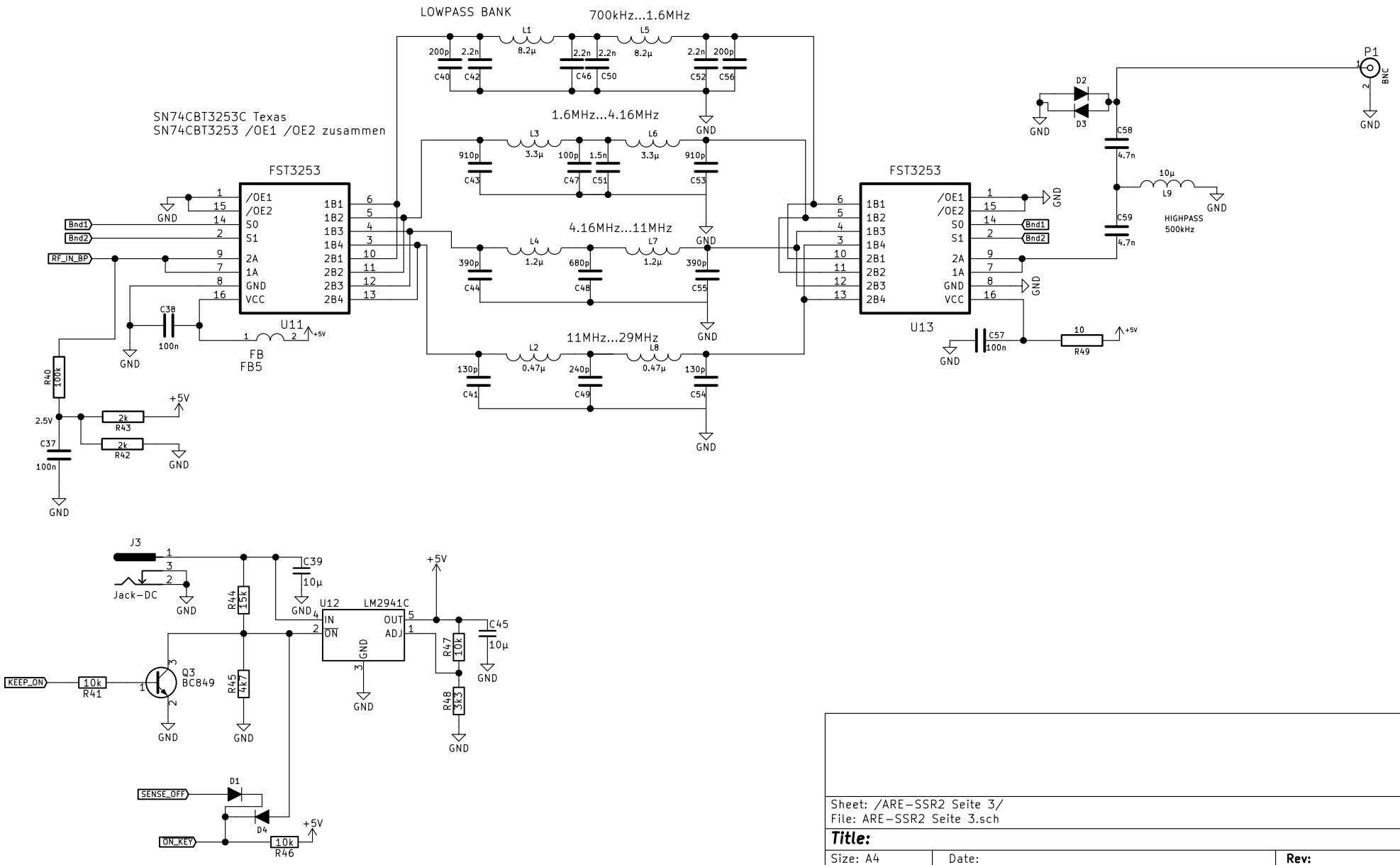

Sheet: /ARE-SSR2 Seite 3/
File: ARE-SSR2 Seite 3.sch

Title:

Size: A4	Date:	Rev:
KiCad E.D.A. kicad 4.0.7		Id: 4/4