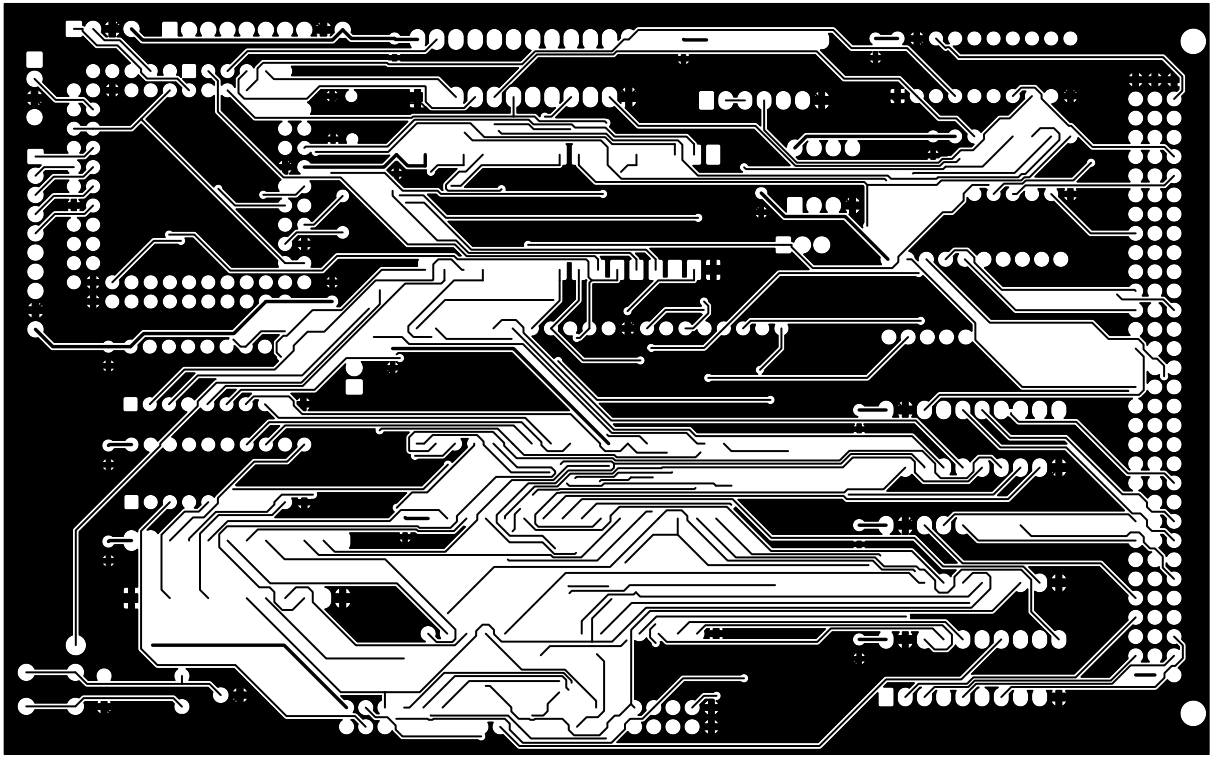

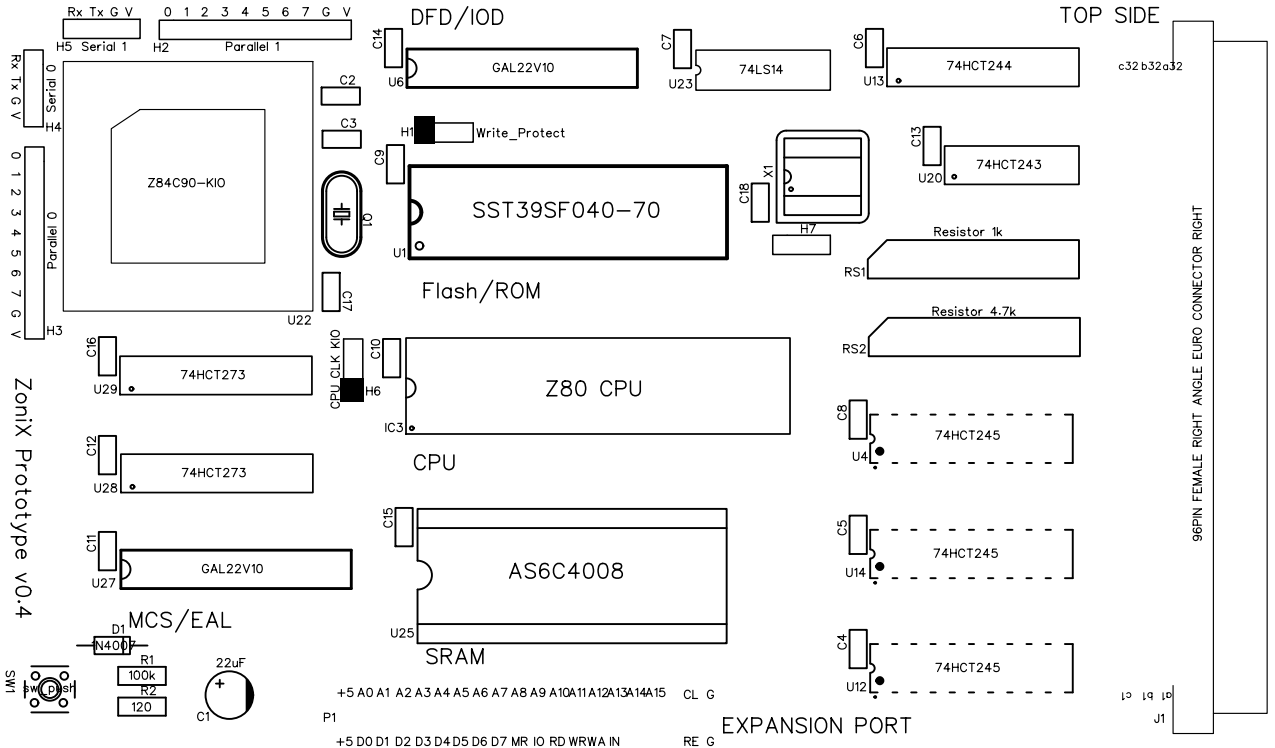
TOP SIDE
DFD/IOD
Rx Tx G V
H5 Serial 1
0 1 2 3 4 5 6 7 G V
H2 Parallel 1
Serial 0
H4
Parallel 0
H3
Z84C90-KIO
U22
C2
C3
Q1
C17
C14
U6
GAL22V10
C7
U23
74LS14
C6
U13
74HCT244
c32 b32 a32
H1
Write_Protect
C9
U1
SST39SF040-70
Flash/ROM
C18
X1
H7
C13
U20
74HCT243
Resistor 1k
RS1
Resistor 4.7k
RS2
96PIN FEMALE RIGHT ANGLE EURO CONNECTOR RIGHT
C16
U29
74HCT273
CPU CLK KIO
H6
C10
IC3
Z80 CPU
CPU
C8
U4
74HCT245
C12
U28
74HCT273
C11
U27
GAL22V10
C15
U25
AS6C4008
SRAM
C5
U14
74HCT245
C4
U12
74HCT245
a1 b1 c1
J1
ZoniX Prototype v0.4
MCS/EAL
D1
1N4007
R1
100k
R2
120
22uF
C1
SW1
Reset
+5 A0 A1 A2 A3 A4 A5 A6 A7 A8 A9 A10 A11 A12 A13 A14 A15 CL G
P1
+5 D0 D1 D2 D3 D4 D5 D6 D7 MR IO RD WR WA IN RE G
EXPANSION PORT
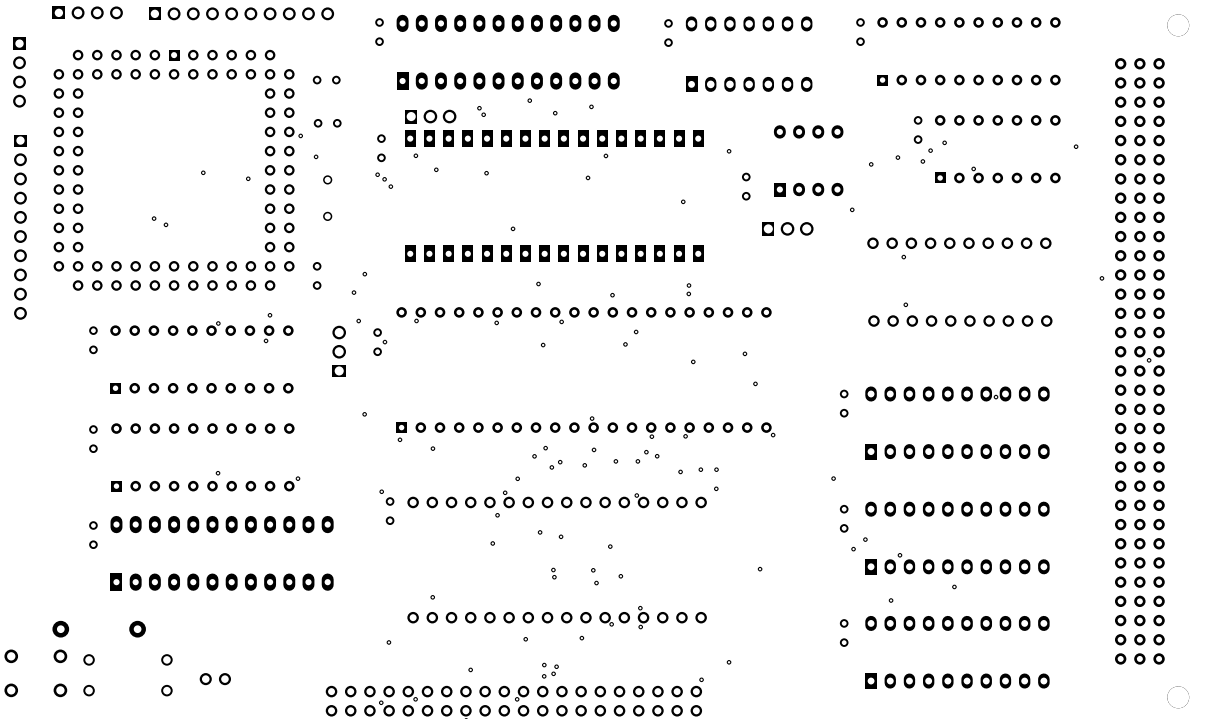
BACK SIDE