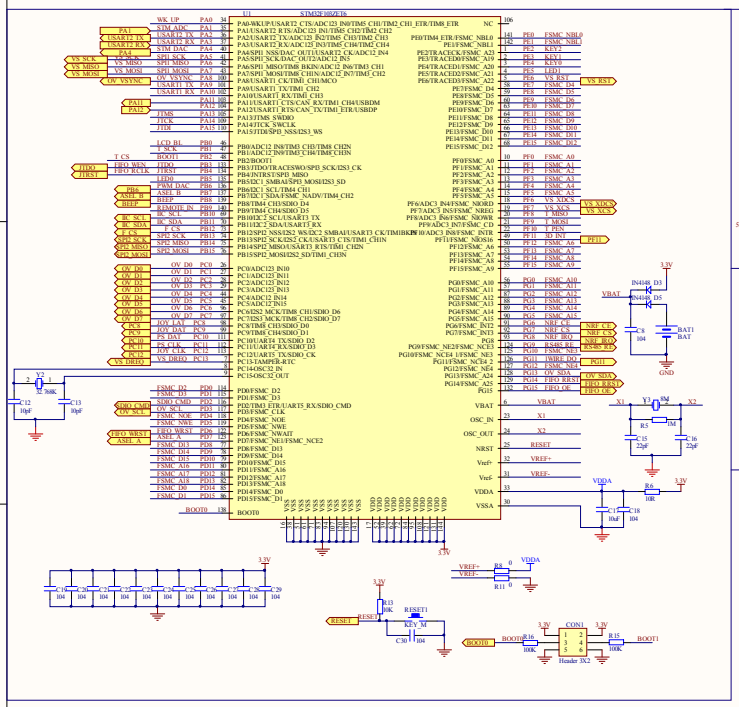

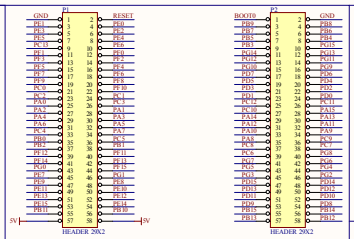

引出I/0口

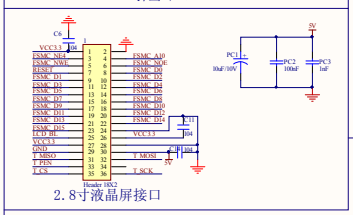

2.8寸液晶屏接口

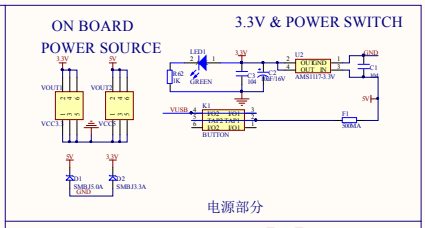

电源部分

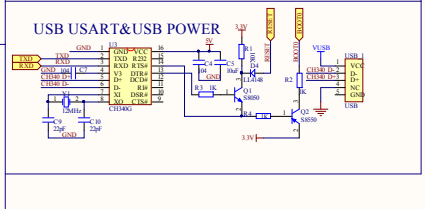

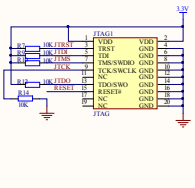

Title			
Size A2	Number		Revision
Date: 2017/4/10		Sheet of	
File: E:\0.0 0.0 E1\...\Minisys\9\ SchDoc		Drawn By:	