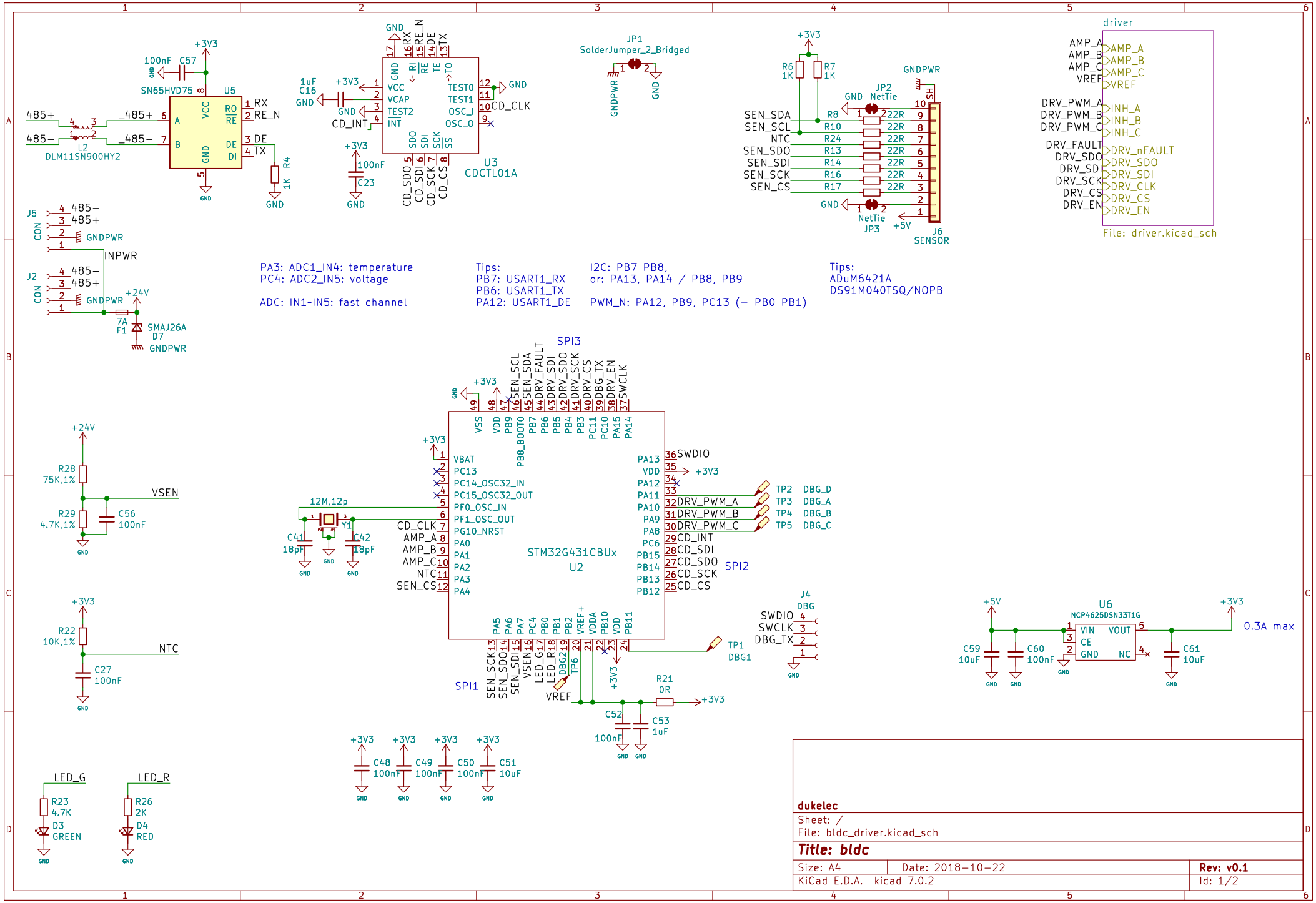

dukelec

Sheet: /

File: bldc_driver.kicad_sch

Title: bldc

Size: A4	Date: 2018-10-22	**Rev: v0.1**
KiCad E.D.A. kicad 7.0.2		Id: 1/2

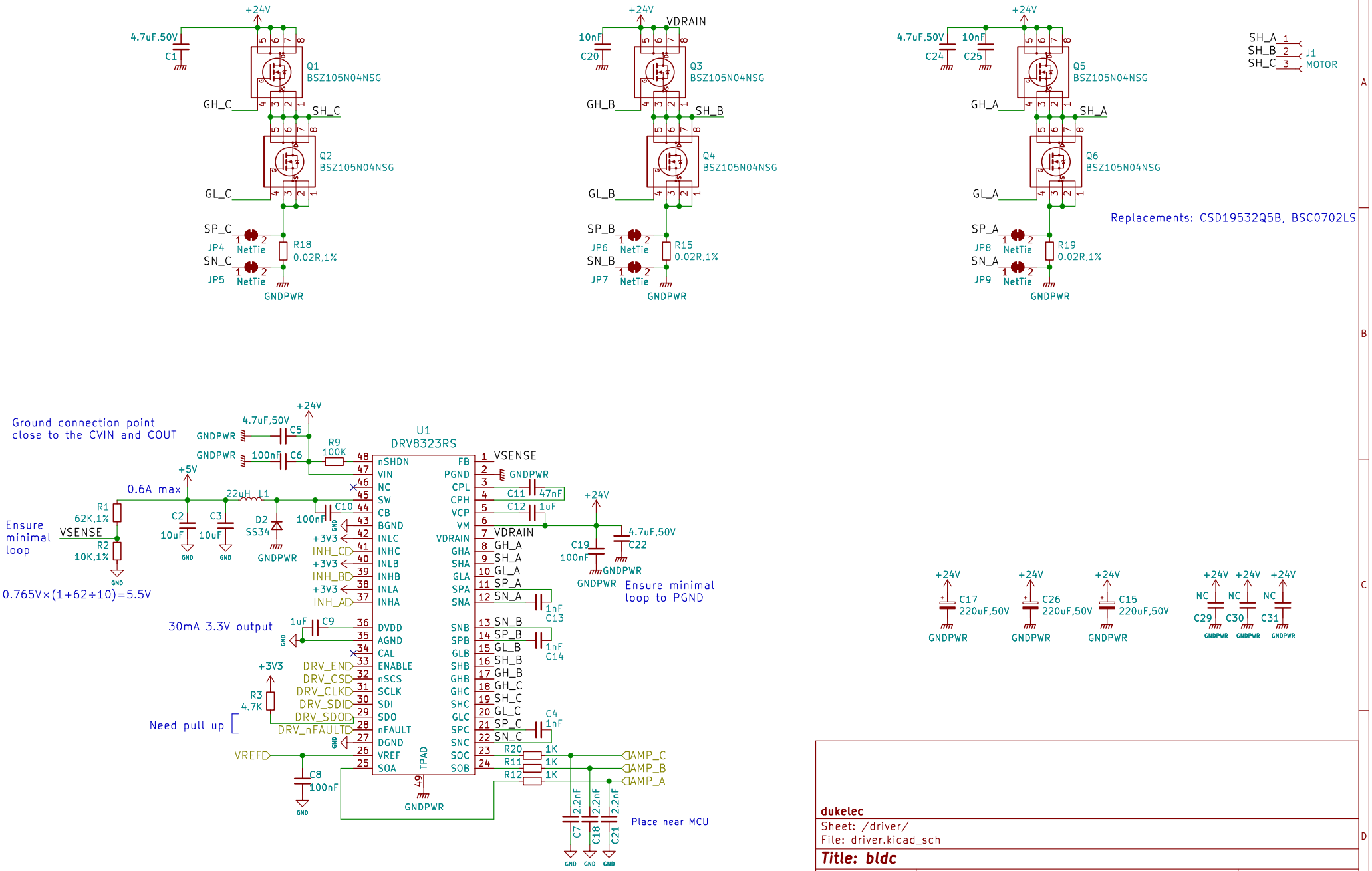

dukelec

Sheet: /driver/
File: driver.kicad_sch

Title: bldc

Size: A4	Date: 2018-10-19	**Rev: v0.1**
KiCad E.D.A. kicad 7.0.2		Id: 2/2