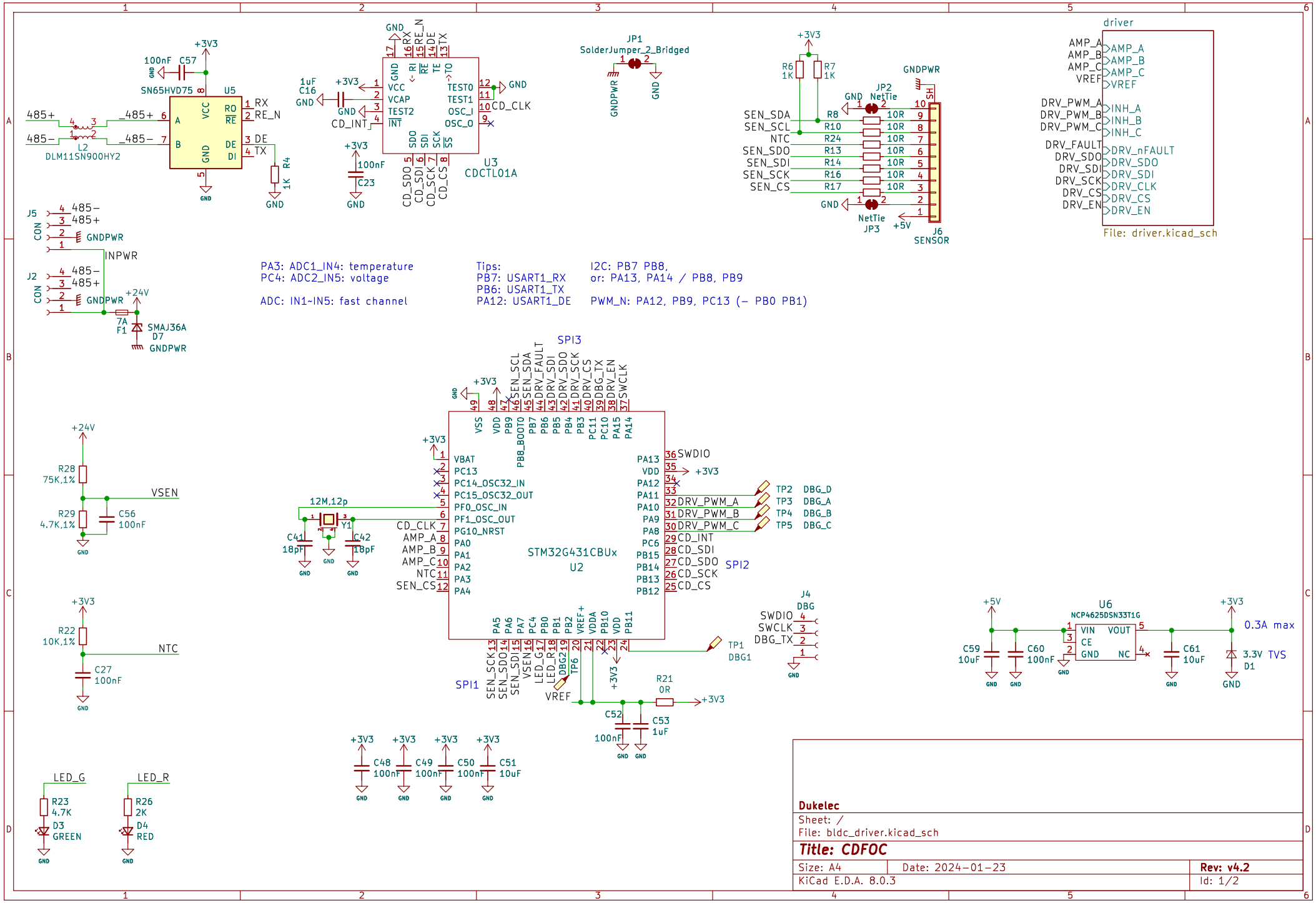
SN65HVD75 U5
100nF C57
+3V3
485+
485−
_485+
_485−
L2
DLM11SN900HY2
RX
RE_N
DE
TX
1K R4
GND
U3
CDCTL01A
1uF C16
CD_INT
100nF C23
CD_CLK
CD_SDO
CD_SDI
CD_SCK
CD_CS
JP1
SolderJumper_2_Bridged
GNDPWR
R6 1K
R7 1K
JP2 NetTie
JP3 NetTie
+5V
J6 SENSOR
SEN_SDA
SEN_SCL
NTC
SEN_SDO
SEN_SDI
SEN_SCK
SEN_CS
driver
AMP_A
AMP_B
AMP_C
VREF
DRV_PWM_A
DRV_PWM_B
DRV_PWM_C
INH_A
INH_B
INH_C
DRV_FAULT
DRV_nFAULT
DRV_SDO
DRV_SDI
DRV_SCK
DRV_CLK
DRV_CS
DRV_EN
File: driver.kicad_sch
J5 CON
J2 CON
INPWR
+24V
7A F1
SMAJ36A D7
PA3: ADC1_IN4: temperature
PC4: ADC2_IN5: voltage
ADC: IN1~IN5: fast channel
Tips:
PB7: USART1_RX
PB6: USART1_TX
PA12: USART1_DE
I2C: PB7 PB8,
or: PA13, PA14 / PB8, PB9
PWM_N: PA12, PB9, PC13 (– PB0 PB1)
SPI3
STM32G431CBUx
U2
VBAT
PC13
PC14_OSC32_IN
PC15_OSC32_OUT
PF0_OSC_IN
PF1_OSC_OUT
PG10_NRST
PA0
PA1
PA2
PA3
PA4
PA13
VDD
PA12
PA11
PA10
PA9
PA8
PC6
PB15
PB14
PB13
PB12
SWDIO
DRV_PWM_A
DRV_PWM_B
DRV_PWM_C
CD_INT
CD_SDI
CD_SDO
CD_SCK
CD_CS
SPI2
SPI1
12M,12p
Y1
C41 18pF
C42 18pF
R28 75K,1%
R29 4.7K,1%
VSEN
C56 100nF
R22 10K,1%
NTC
C27 100nF
TP1 DBG1
TP2 DBG_D
TP3 DBG_A
TP4 DBG_B
TP5 DBG_C
J4 DBG
SWDIO
SWCLK
DBG_TX
VREF
R21 0R
C52 100nF
C53 1uF
C48 100nF
C49 100nF
C50 100nF
C51 10uF
LED_G
LED_R
R23 4.7K
D3 GREEN
R26 2K
D4 RED
U6
NCP4625DSN33T1G
VIN
VOUT
CE
GND
NC
C59 10uF
C60 100nF
C61 10uF
0.3A max
3.3V TVS D1
Dukelec
Sheet: /
File: bldc_driver.kicad_sch
Title: CDFOC
Size: A4
Date: 2024-01-23
Rev: v4.2
KiCad E.D.A. 8.0.3
Id: 1/2

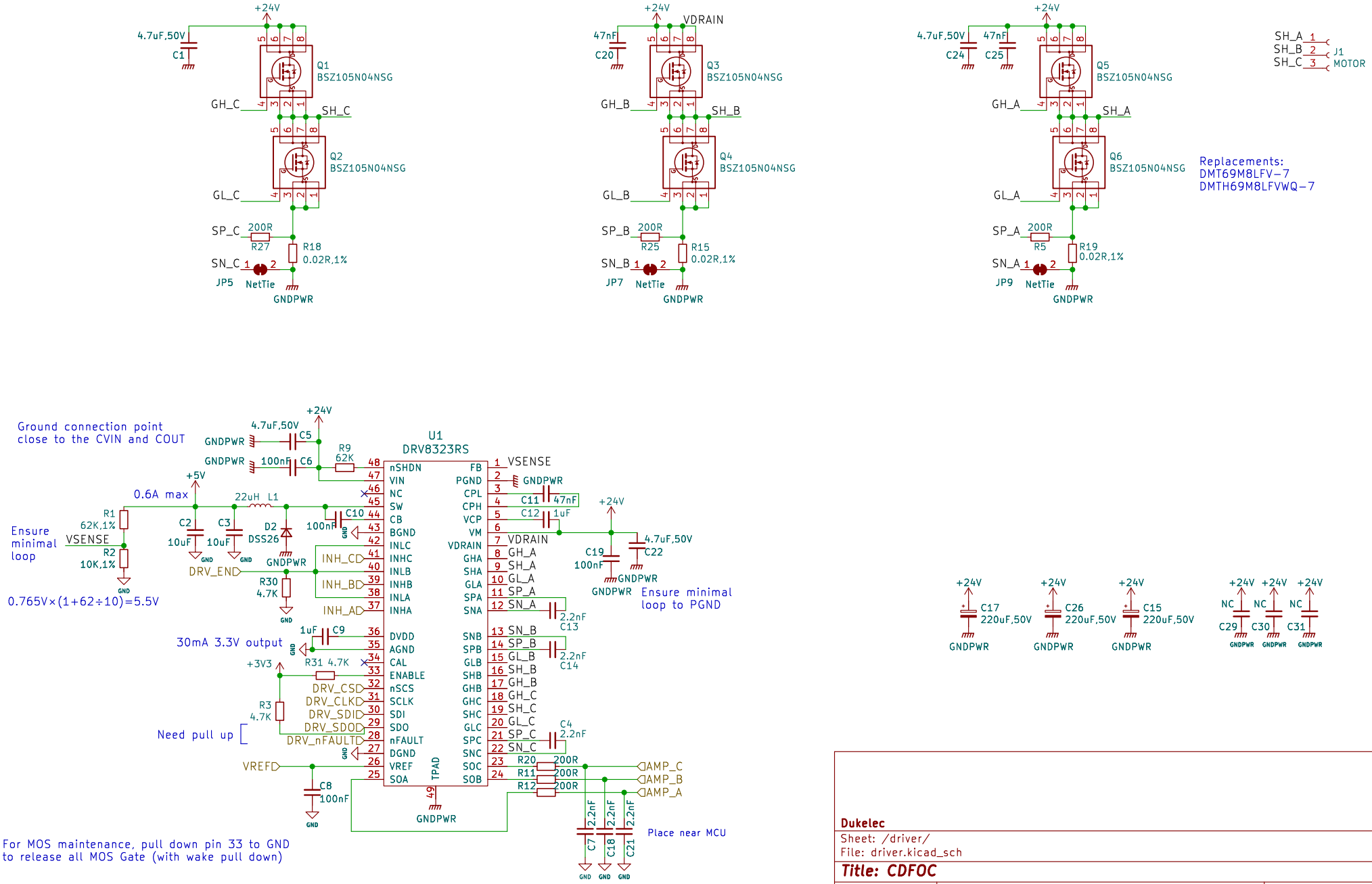

Dukelec

Sheet: /driver/
File: driver.kicad_sch

Title: CDFOC

Size: A4	Date: 2024-01-23	**Rev: v4.2**
KiCad E.D.A. 8.0.3		Id: 2/2