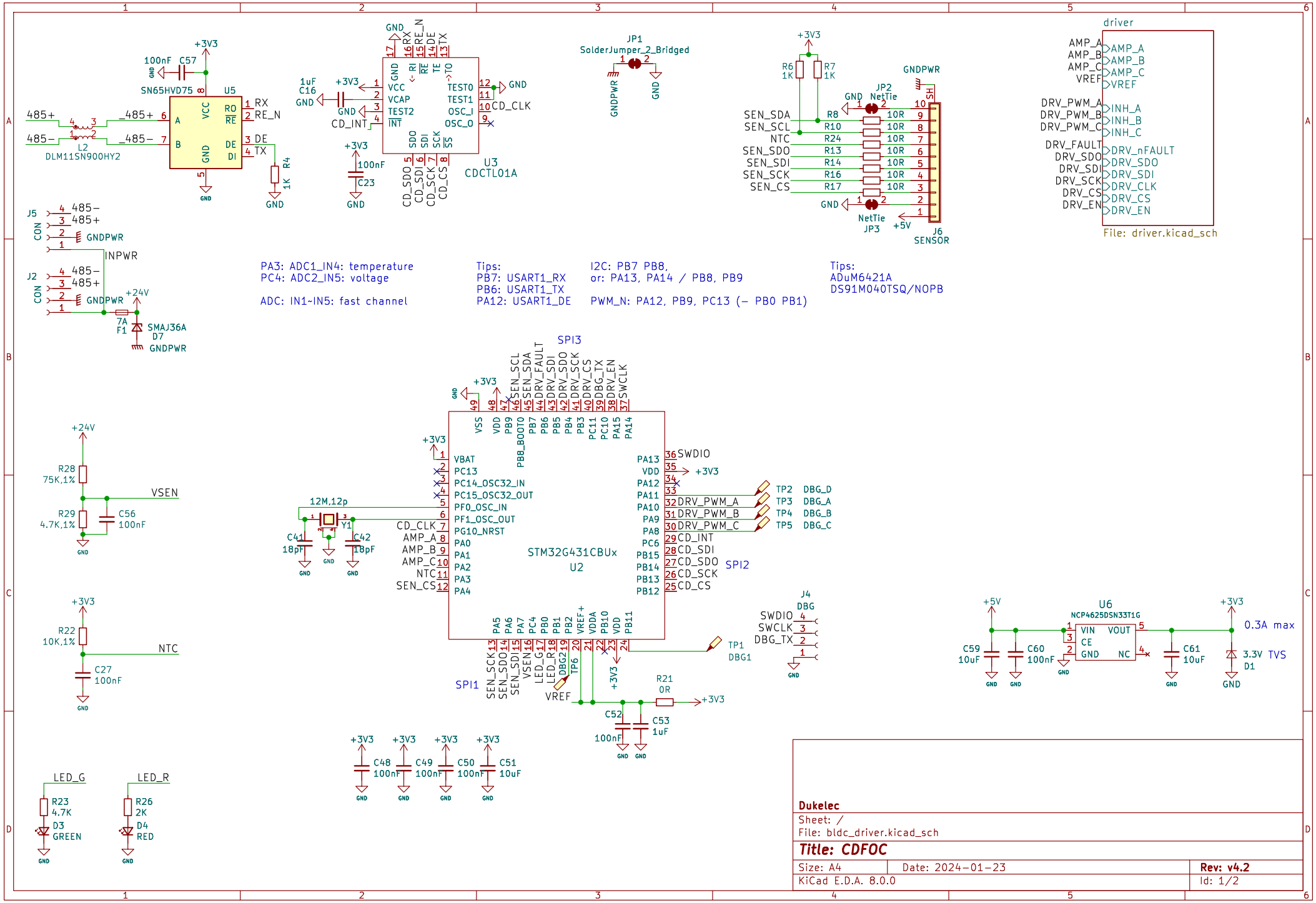

Dukelec

Sheet: /

File: bldc_driver.kicad_sch

Title: CDFOC

Size: A4	Date: 2024-01-23	**Rev: v4.2**
KiCad E.D.A. 8.0.0		Id: 1/2

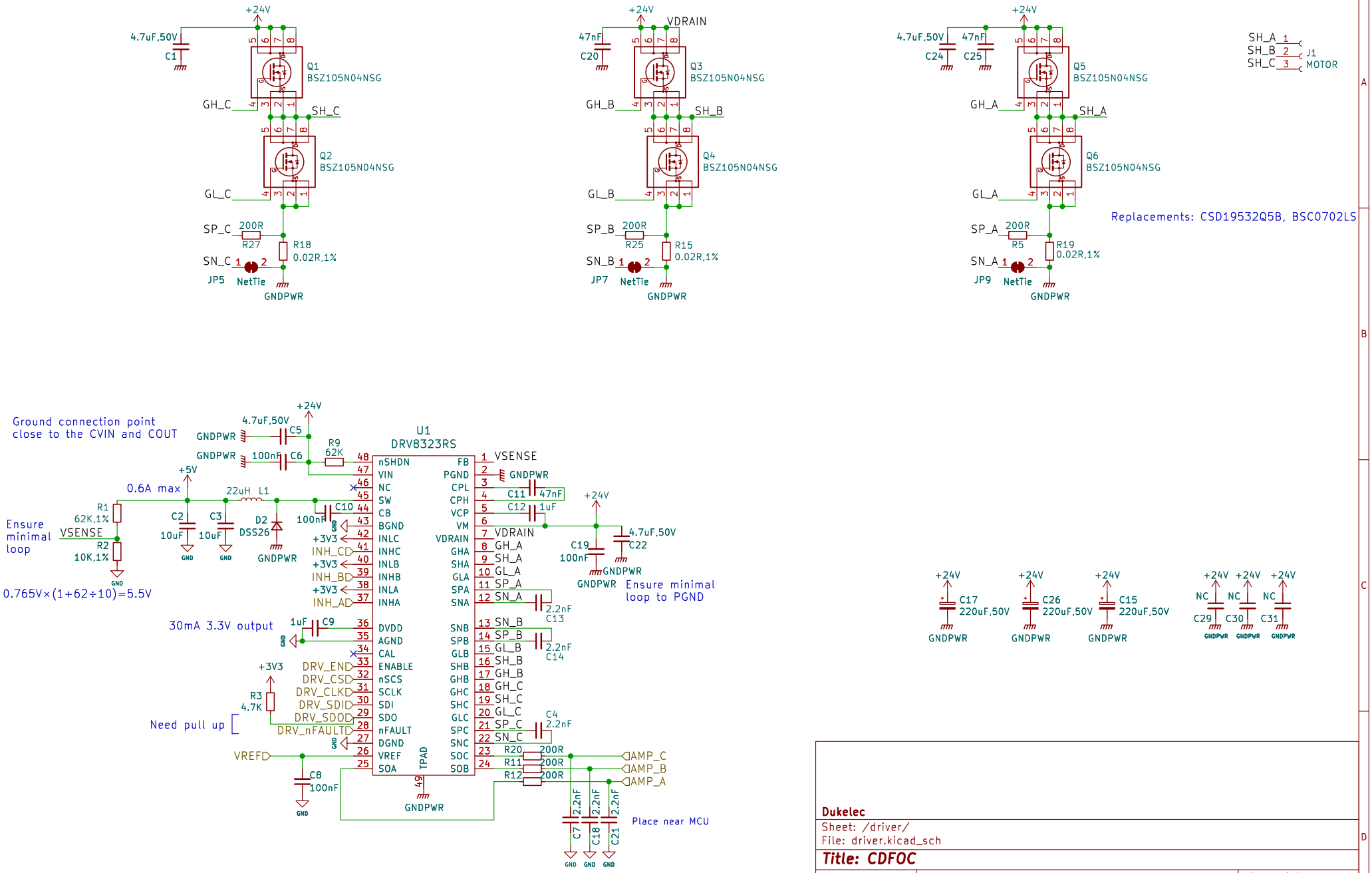

Dukelec

Sheet: /driver/
File: driver.kicad_sch

Title: CDFOC

Size: A4	Date: 2024-01-23	**Rev: v4.2**
KiCad E.D.A. 8.0.0		Id: 2/2