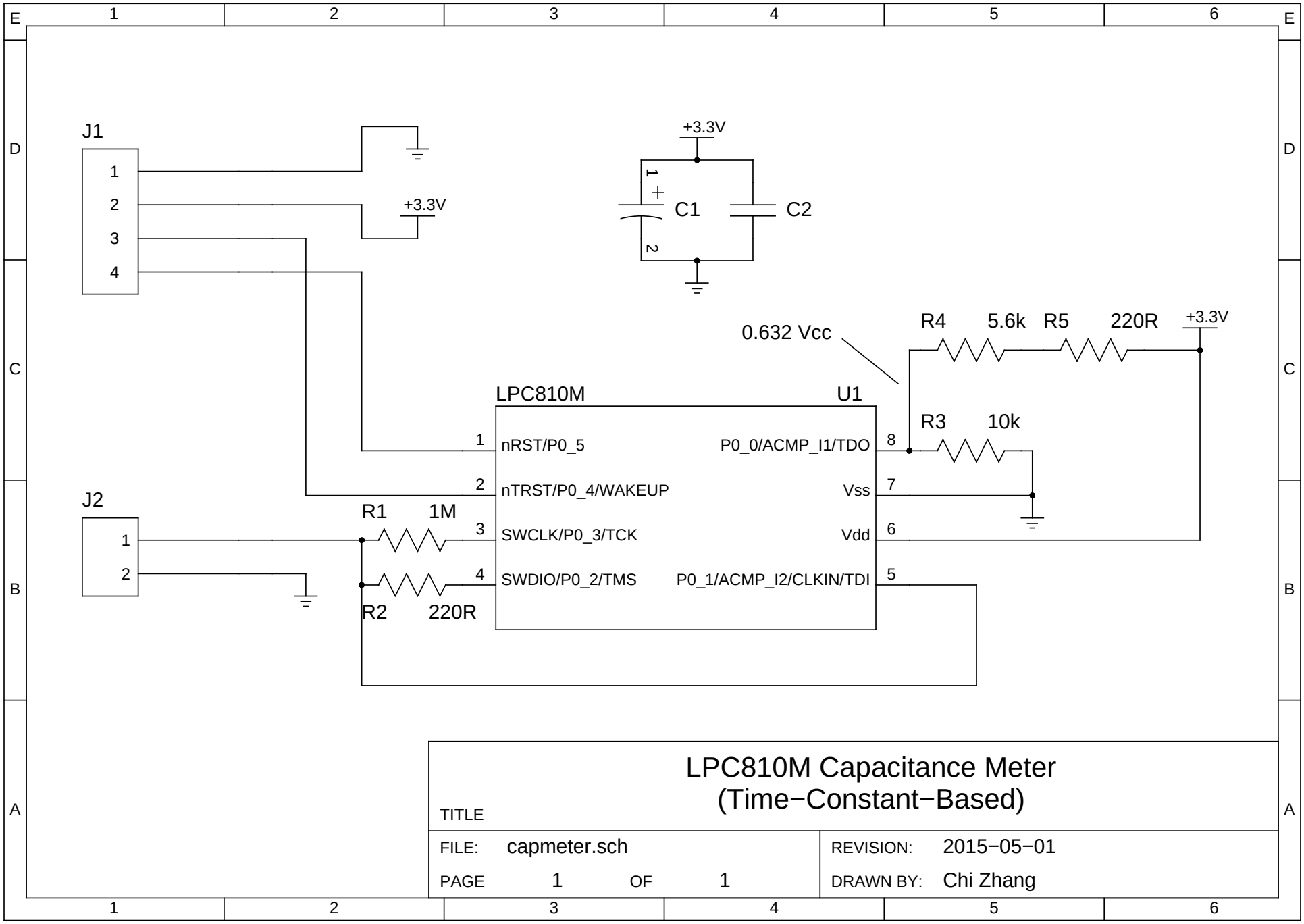
J1
1
2
3
4
+3.3V
+3.3V
1
+
C1
2
C2
0.632 Vcc
R4
5.6k
R5
220R
+3.3V
LPC810M
U1
R3
10k
1
nRST/P0_5
P0_0/ACMP_I1/TDO
8
2
nTRST/P0_4/WAKEUP
Vss
7
J2
R1
1M
3
SWCLK/P0_3/TCK
Vdd
6
1
2
4
SWDIO/P0_2/TMS
P0_1/ACMP_I2/CLKIN/TDI
5
R2
220R
TITLE
LPC810M Capacitance Meter
(Time−Constant−Based)
FILE:
capmeter.sch
REVISION:
2015−05−01
PAGE
1
OF
1
DRAWN BY:
Chi Zhang