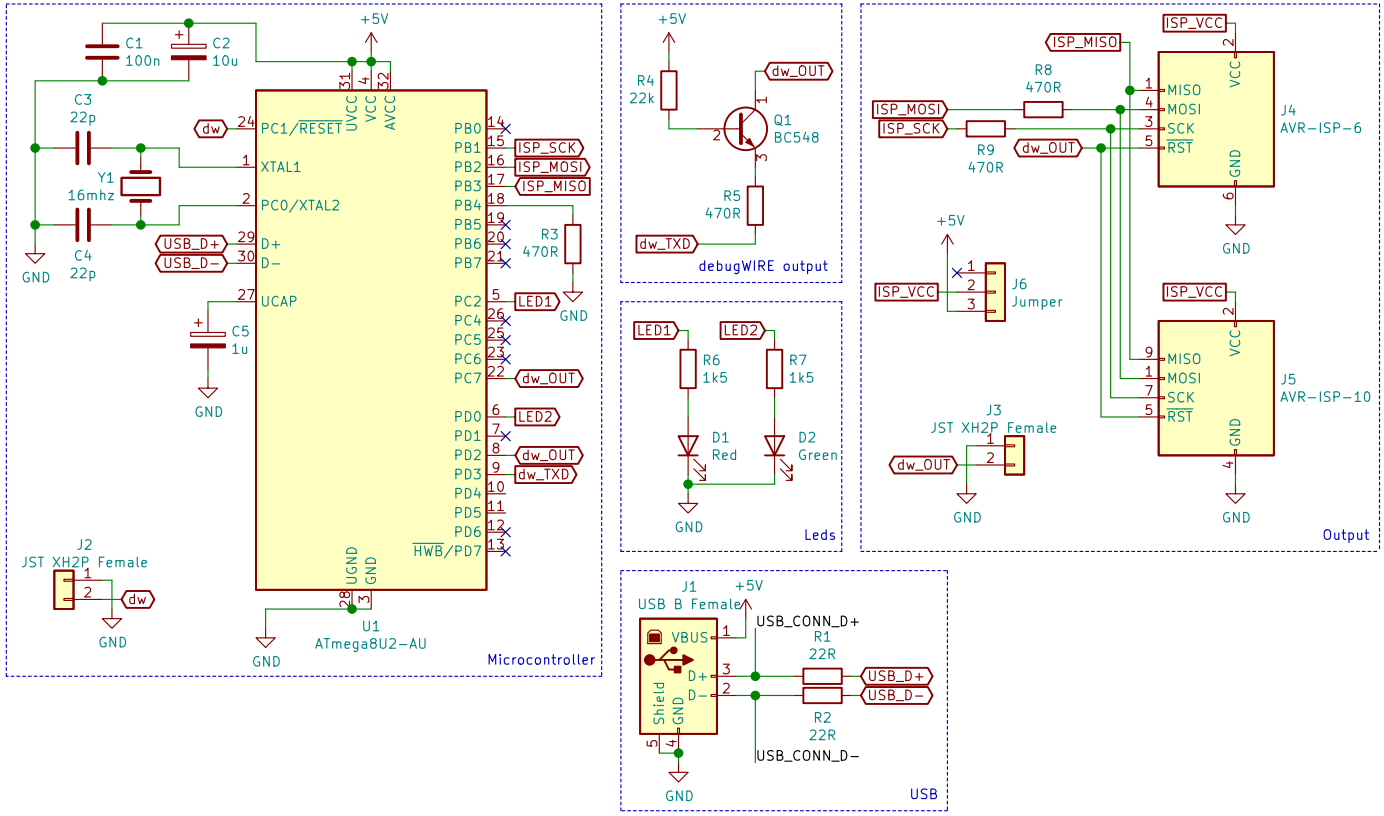

H1 MountingHole

H2 MountingHole

H3 MountingHole

H4 MountingHole

Designed by: Rafael G. Martins

dwtk.rgm.io

Sheet: /

File: dwtk-ice-u2.sch

Title: dwtk-ice u2

Size: A4	Date: 2021-12-14	**Rev: 1.0**
KiCad E.D.A. kicad 5.99.0+really5.1.12+dfsg1-1		Id: 1/1