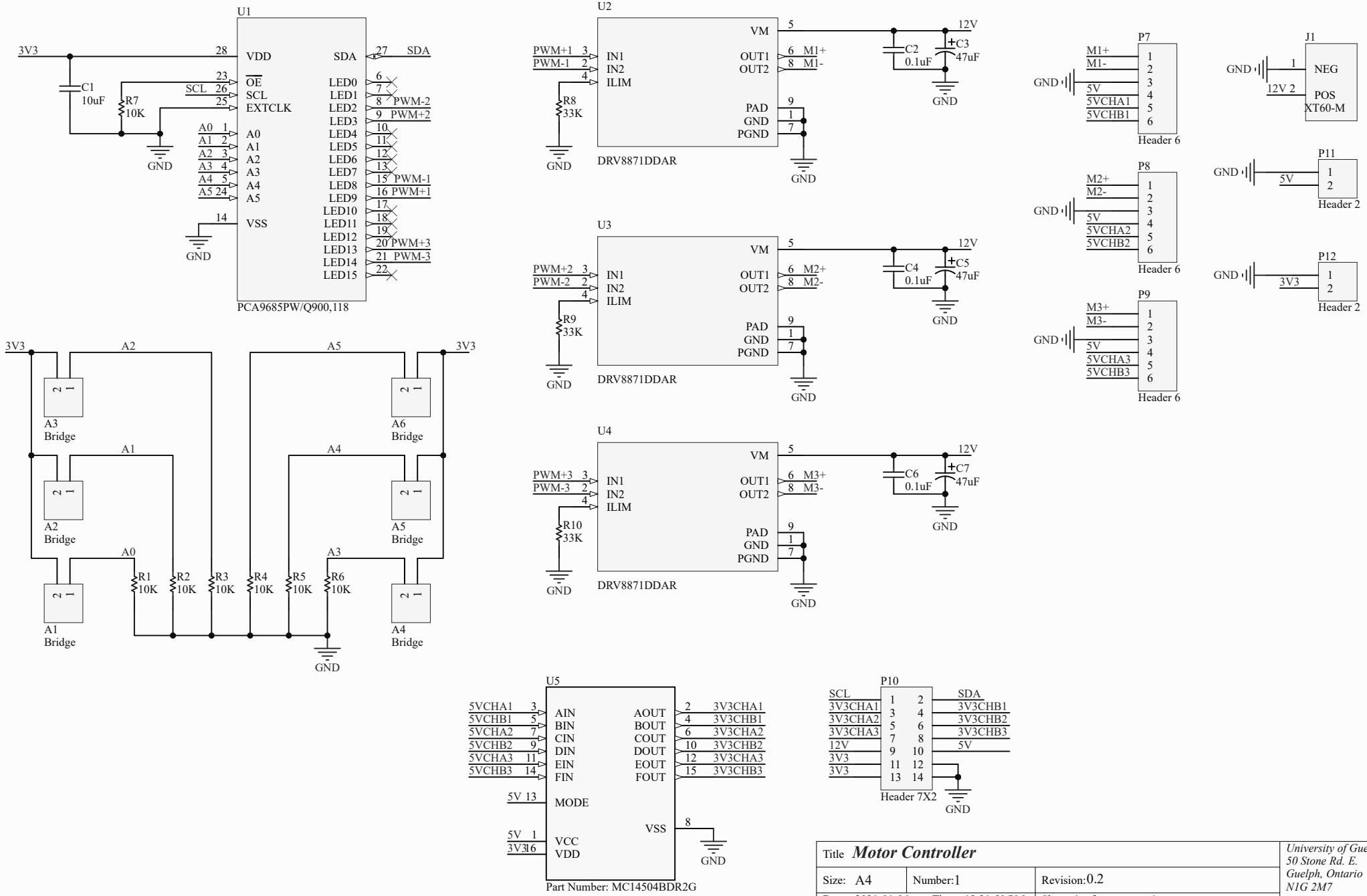

Title **Motor Controller**		*University of Guelph*
Size: A4	Number: 1	Revision: 0.2
Date: 2021-01-06	Time: 12:21:50 PM	Sheet 1 of 1
File: C:\Users\jdiro\Desktop\git\3WD-PCBs\3Wheel_MotorDrivers_Encoders\3Wheel_MotorDrivers_Encoders.SchDoc		

50 Stone Rd. E.
Guelph, Ontario
N1G 2M7