CS65K Robotics

Modelling, Planning and Control

Chapter 1 Introduction

LECTURE 1: INTRODUCTION

DR. ERIC CHOU

IEEE SENIOR MEMBER

Overview

- The concept of robot is introduced with reference to the evolution of the field from industrial robotics to field and service robotics
- The main components of a robotic system are illustrated

Overview

SECTION 1

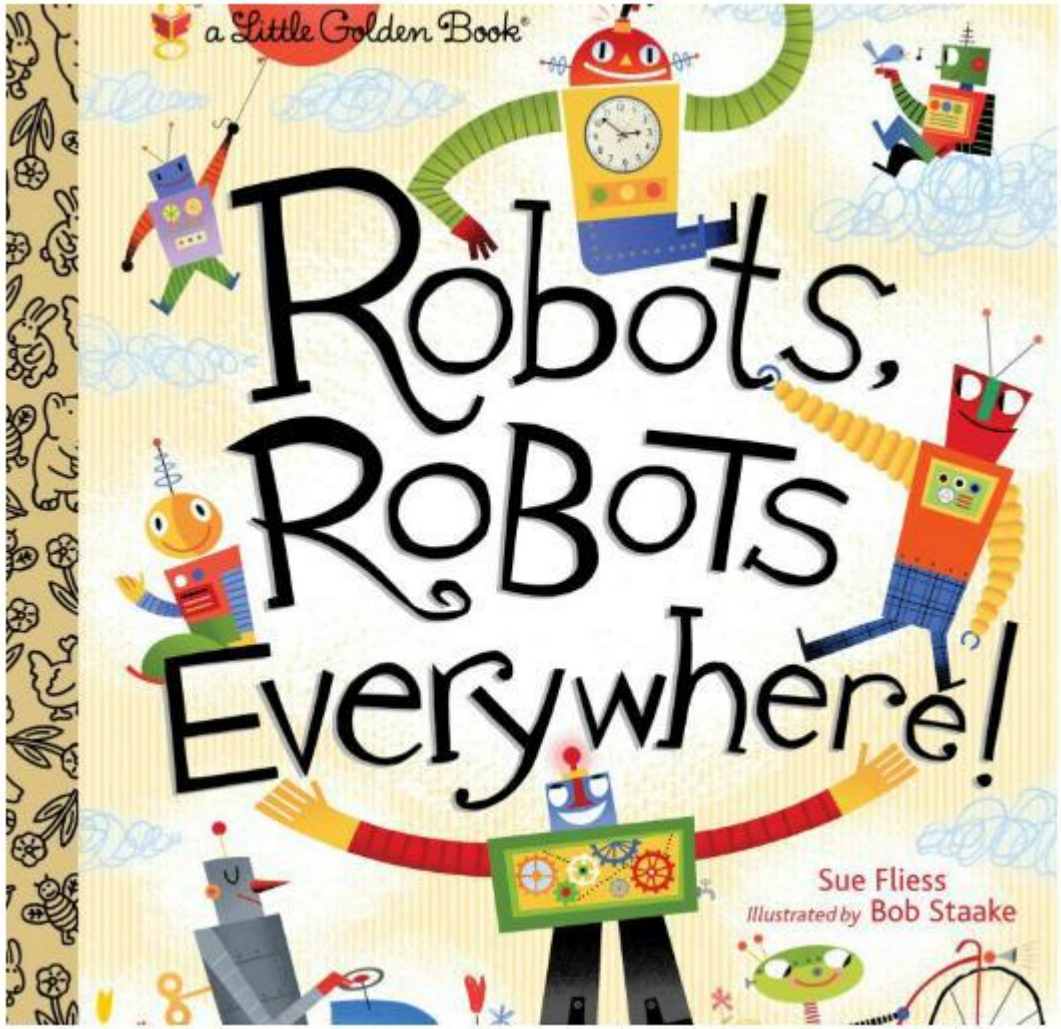

Robots Everywhere Today

- Mars
- Oceans
- Hospitals
- Factories
- Schools
- Homes
- …

The Age of Robots

Tomorrow

- Intelligent
- Personal
- Pervasive
- Disappearing
- Ubiquitous
- …

What is a Robot?

- Robot (*robota* = executive labour*)*
- One of human beings' greatest ambitions has been to give life to their artifacts (*mythology*)
- People continue to imagine the robot as a humanoid who can speak, walk, see, and hear, with gestures and reactions of human type (*science fiction*)
- The robot is defined as a machine able to carry out tasks automatically to replace or improve human work (*reality*)

Movies

- Wall-E, Pixar (2008)
- SMErobot, see also Smerobot.org (2005)

A Precursor

- Human-machine interaction
- A rigid sequence, it is the human to comply
- Do we really want a fully autonomous machine?

Video

"Modern Times", Charlie Chaplin (1936)

Robots — A 50 Year Journey

- The development of the field in the second half of the past century is illustrated by this iconic video which was first presented at the 2000 IEEE International Conference on Robotics and Automation in San Francisco, CA

Video

- "Robots — A 50 Year Journey", Oussama Khatib (2000)

Robots — The Journey Continues

- The further development of the field in the last fifteen years is illustrated by this lively video which has recently appeared in conjunction with the Second Edition of the Springer Handbook of Robotics.

Video

"Robots — The Journey Continues", Bruno Siciliano, Oussama Khatib, Torsten Kröger (2016)

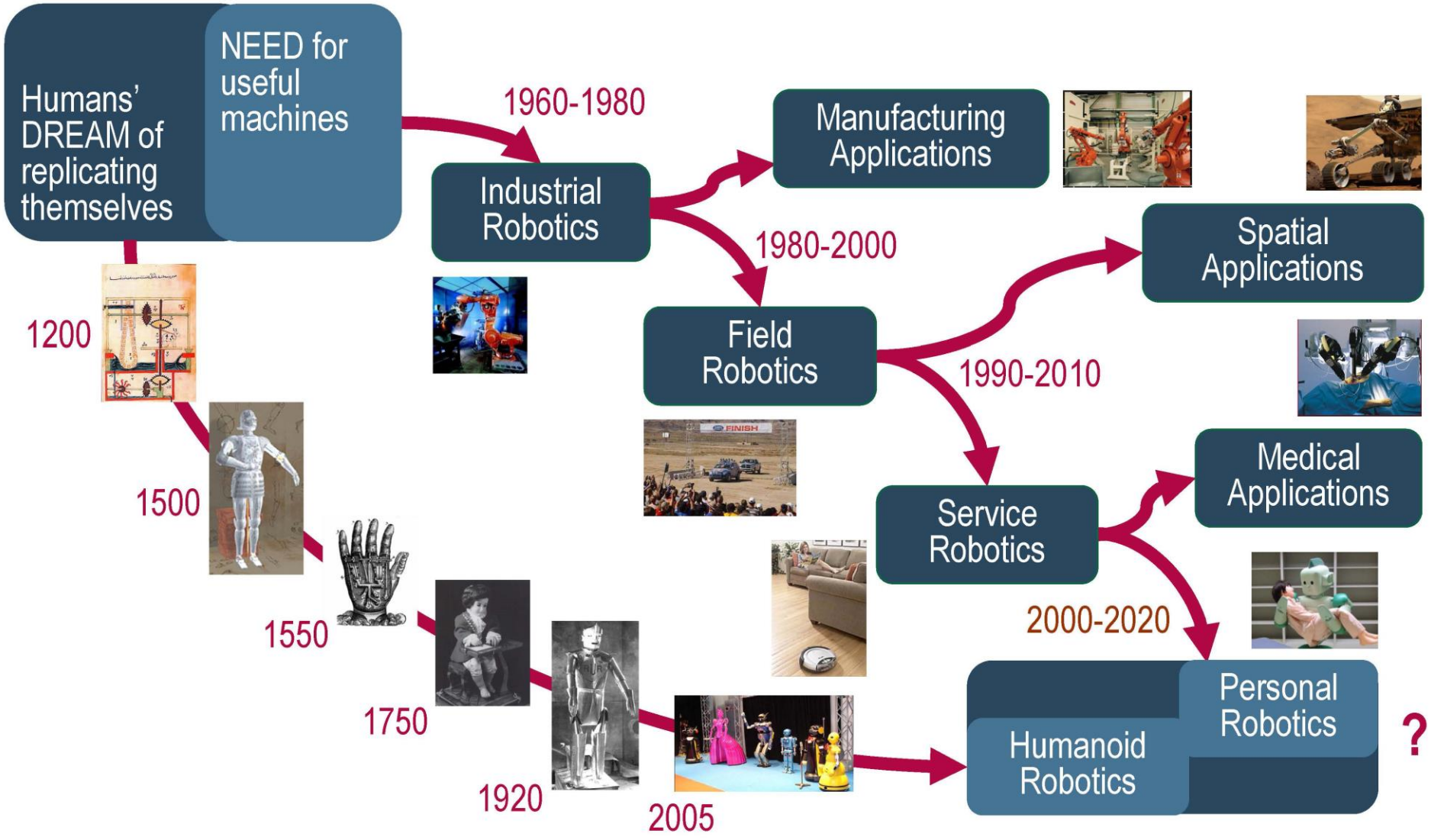
Humans' DREAM of replicating themselves
NEED for useful machines
1960-1980
Industrial Robotics
Manufacturing Applications
1980-2000
Field Robotics
Spatial Applications
1990-2010
Service Robotics
Medical Applications
2000-2020
Personal Robotics
Humanoid Robotics
?
1200
1500
1550
1750
1920
2005
FINISH

Industry

Automotive
Chemical
Electronics
Food

Field

Aerial
Space
Underwater
Search and rescue

Service

Domestic
Edutainment
Rehabilitation
Medical

Level of Autonomy

Definition of Robots

SECTION 2

What is Robots?

- The main geometries for a robot arm are presented along with their features in terms of joint type, workspace, mechanical stiffness, accuracy, actuation and industrial applications
- The spherical wrist is introduced as the main design in terms of compactness and dexterity
- Both open and closed kinematic chains are considered

Components of a Robotic System

Mechanical system

- Locomotion apparatus (wheels, crawlers, mechanical legs)
- Manipulation apparatus (mechanical arms, end-effectors, artificial hands)

Components of a Robotic System

Actuation system

- Animates the mechanical components of the robot
- Motion control (servomotors, drives, transmissions

Components of a Robotic System

Sensory system

- Proprioceptive sensors (internal information on system)
- Exteroceptive sensors (external information on environment)

Components of a Robotic System

Control system

- Execution of action set by task planning coping with robot and environment's constraints
- Adoption of feedback principle
- Use of system models

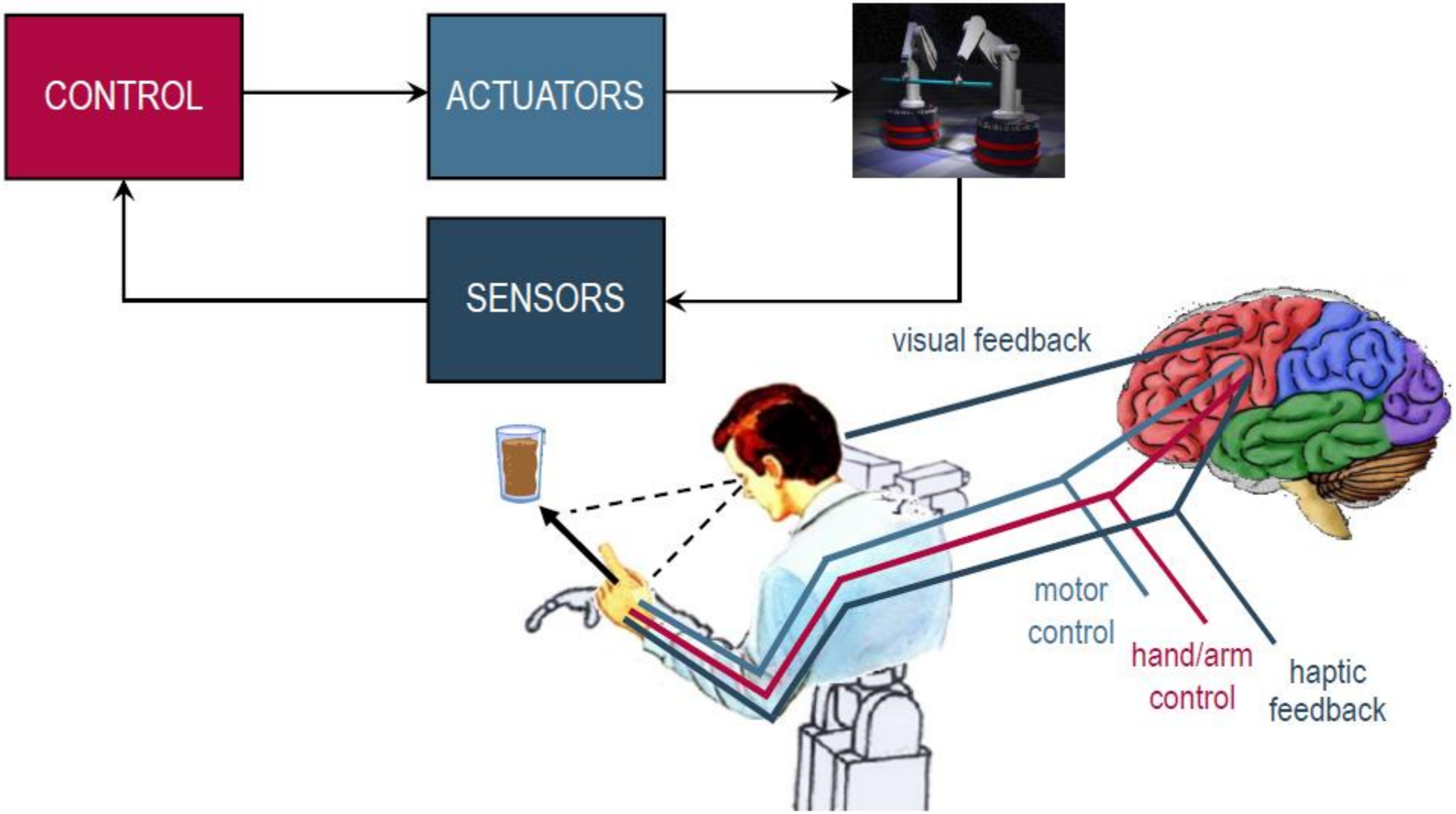
CONTROL
ACTUATORS
SENSORS
visual feedback
motor control
hand/arm control
haptic feedback

Components of a robot joint control system

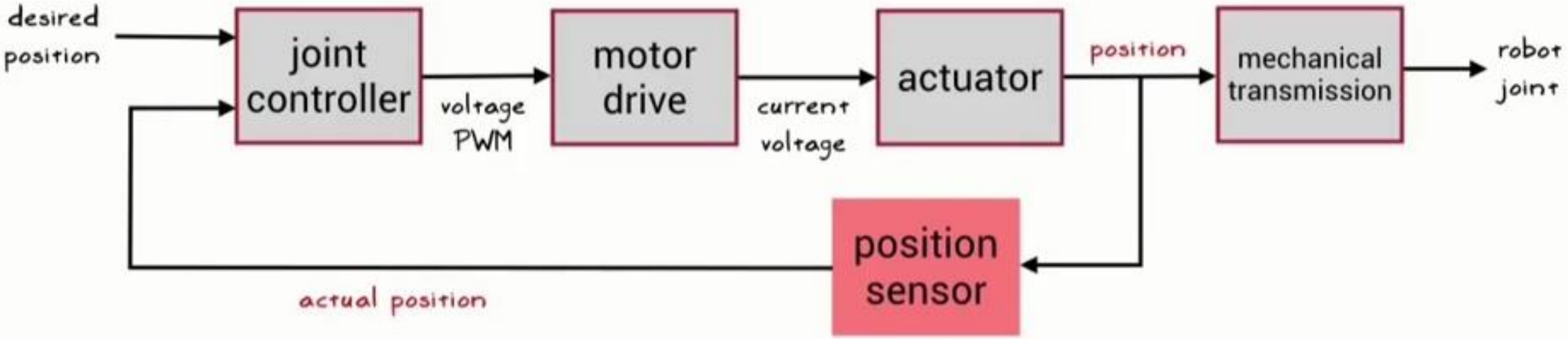

Basic components of robot

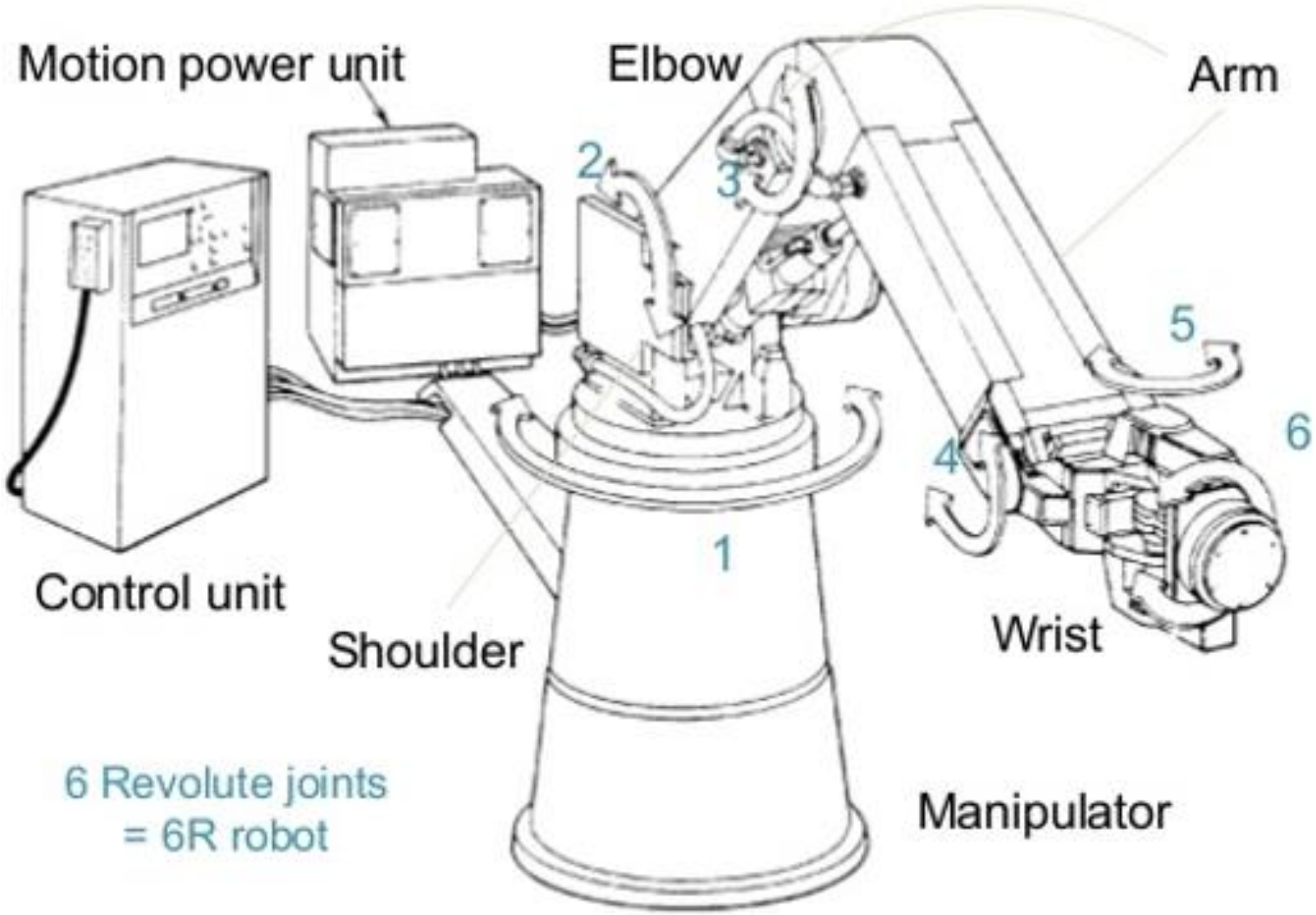

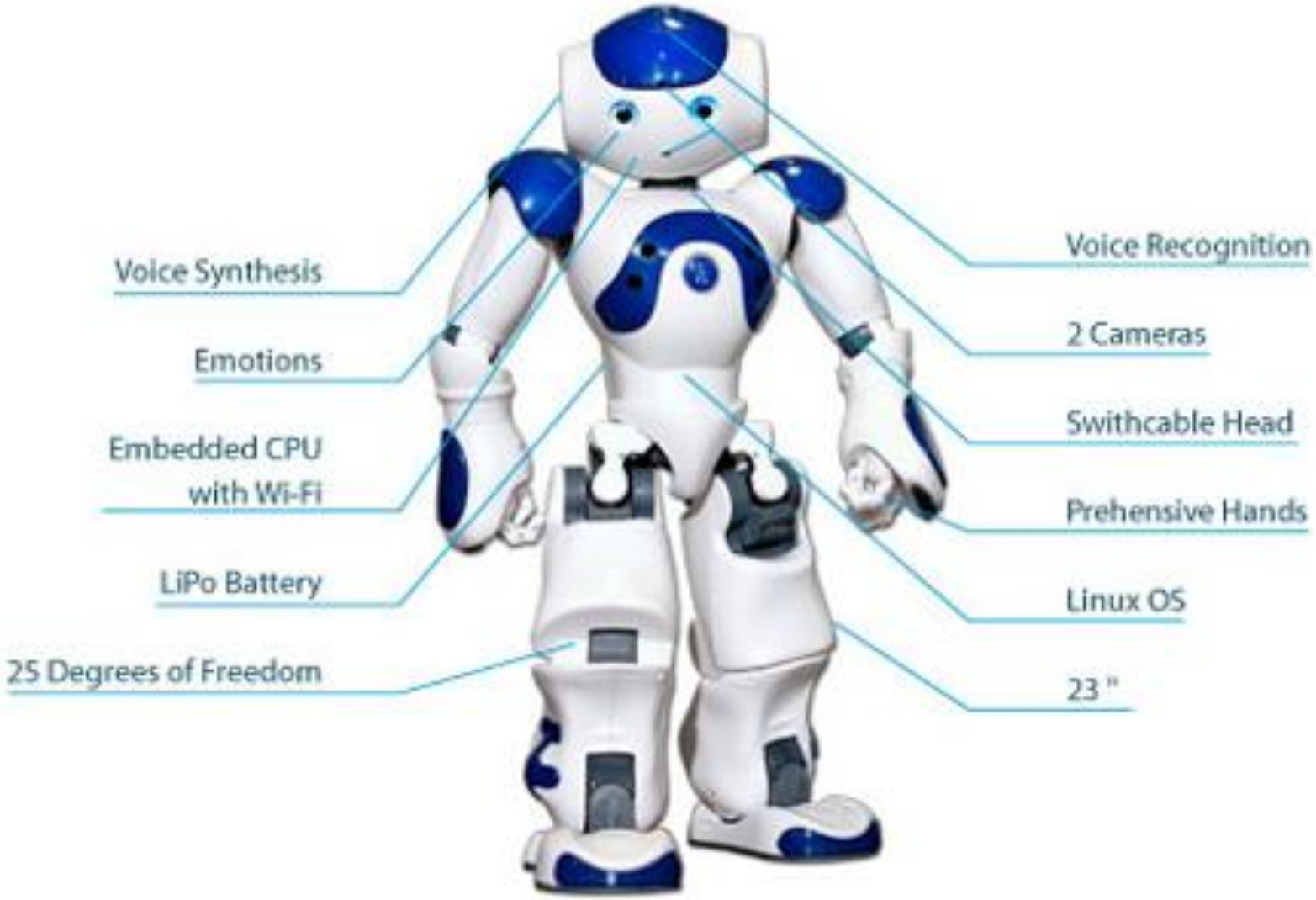
Voice Synthesis
Emotions
Embedded CPU
with Wi-Fi
LiPo Battery
25 Degrees of Freedom
Voice Recognition
2 Cameras
Swithcable Head
Prehensive Hands
Linux OS
23 "

Robot Mechanical Structure

SECTION 3

Robot Manipulator

Mechanical structure of *robot manipulator*: sequence of rigid bodies (*links*) interconnected by means of articulations (*joints*)

- *Arm* ensuring mobility
- *Wrist* conferring dexterity
- *End-effector* performing the task required of robot

Robot Manipulator

Mechanical structure of *robot manipulator*: sequence of rigid bodies (*links*) interconnected by means of articulations (*joints*)

- *Arm* ensuring mobility
- *Wrist* conferring dexterity
- *End-effector* performing the task required of robot

Robot Manipulator

Mechanical structure

- *Open* vs. *closed* kinematic chain

Mobility

- *Prismatic* vs. *revolute* joints

Degrees of freedom

- 3 for *position* + 3 for *orientation*

Workspace

- Portion of environment the manipulator's end-effector can access

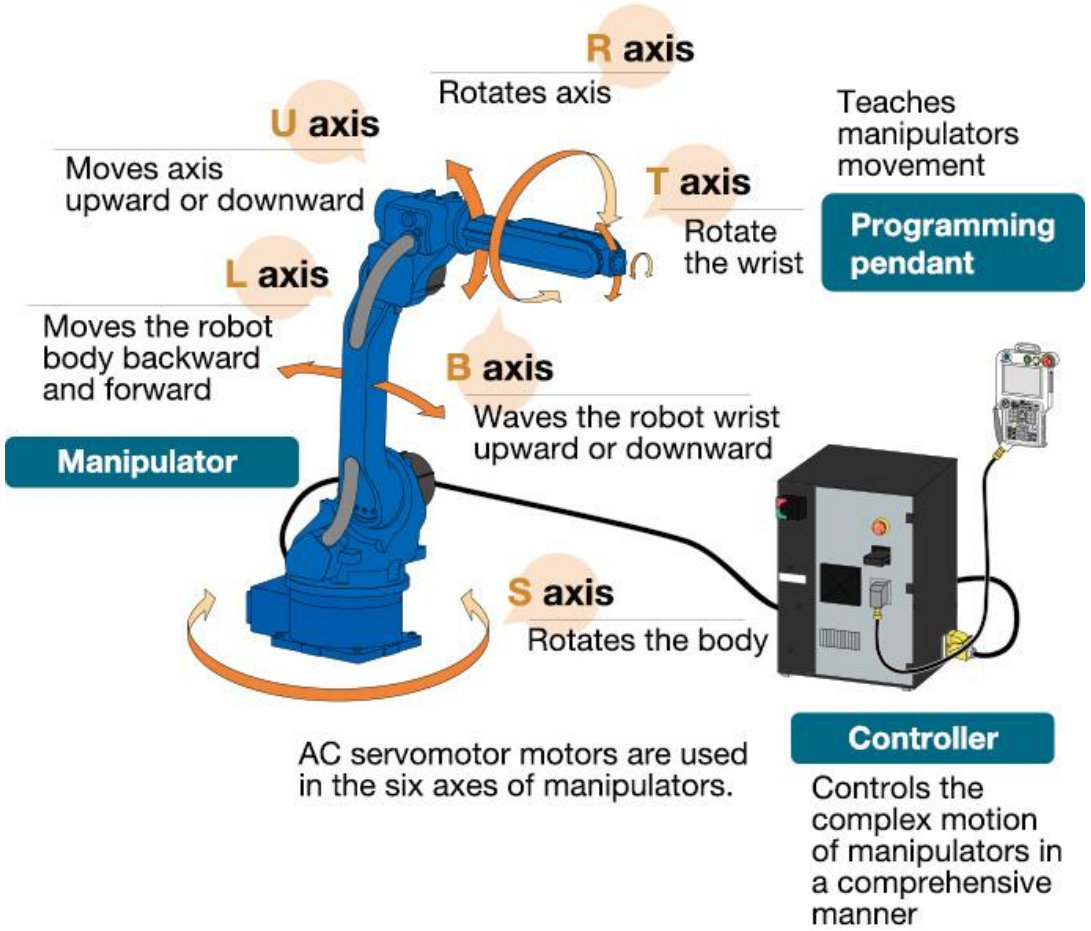
R axis
Rotates axis
U axis
Moves axis upward or downward
T axis
Rotate the wrist
Teaches manipulators movement
Programming pendant
L axis
Moves the robot body backward and forward
B axis
Waves the robot wrist upward or downward
Manipulator
S axis
Rotates the body
AC servomotor motors are used in the six axes of manipulators.
Controller
Controls the complex motion of manipulators in a comprehensive manner

CHIP
MANUFACTURING
PROCESS

Robot Manipulators

SECTION 4

Types of Manipulators

- Cartesian Manipulator
- Cylindrical Manipulator
- Spherical Manipulator
- SCARA Manipulator
- Anthropomorphic Manipulator
- Parallel Manipulator
- Wrist and End-effector

Mathematical modeling

Robot

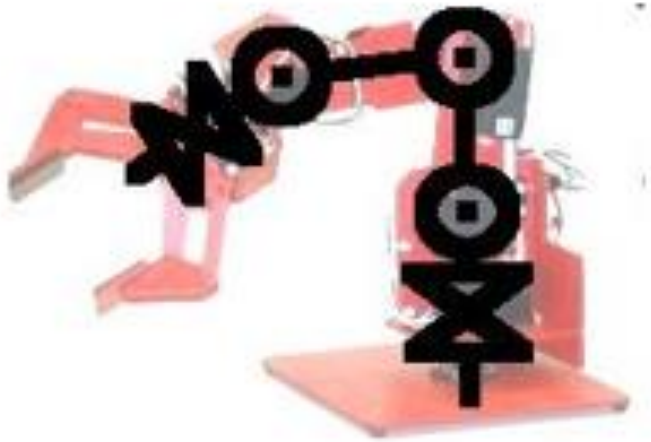

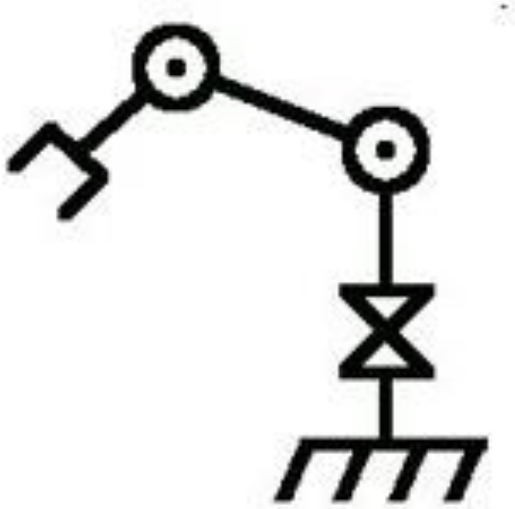

Abstract model

Strategy:

1. Model each joint separately
2. Combine joints and linkage lengths

Modeling

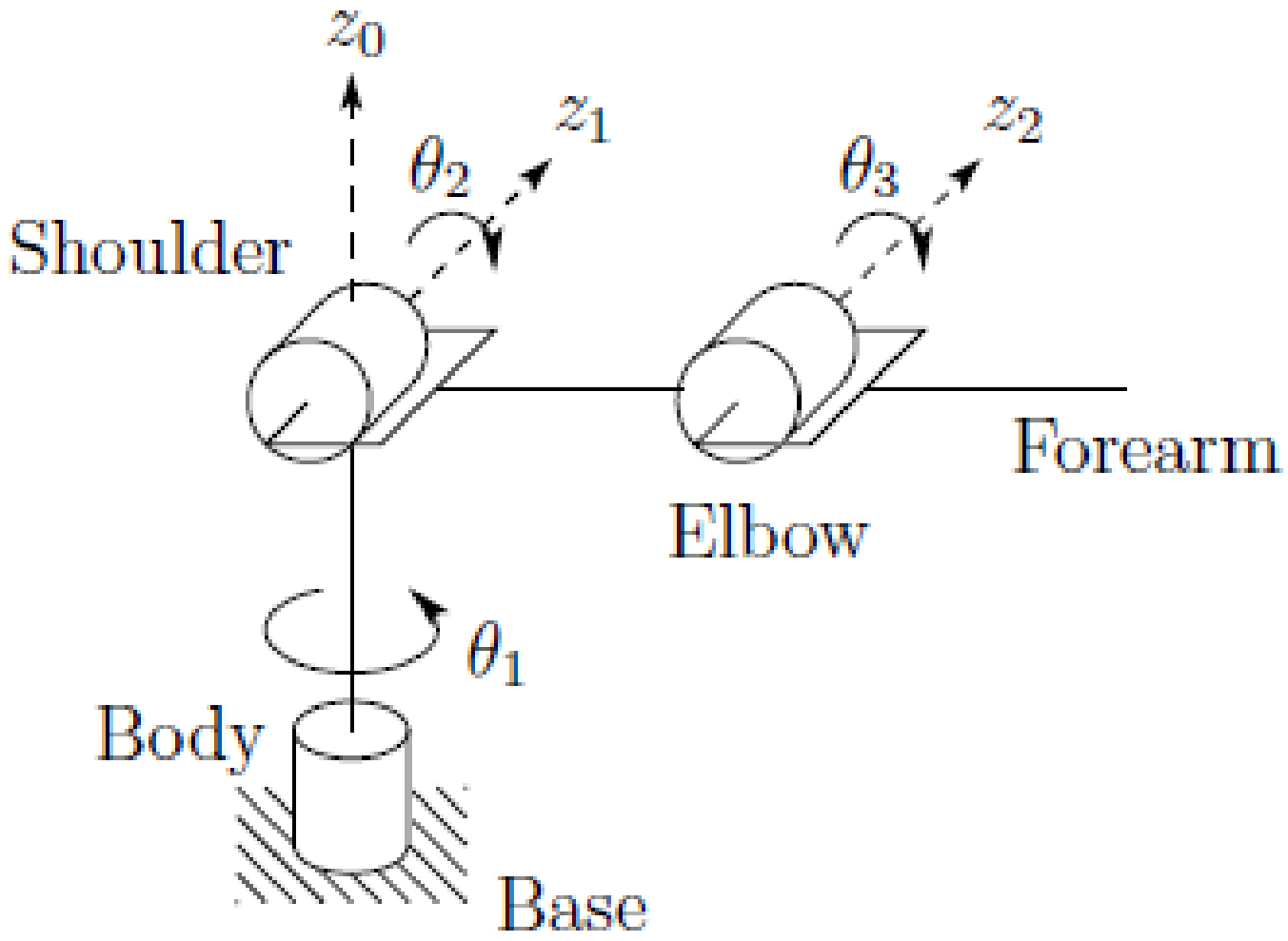
z_0
z_1
z_2
θ_2
θ_3
Shoulder
Forearm
Elbow
θ_1
Body
Base

Physical Model

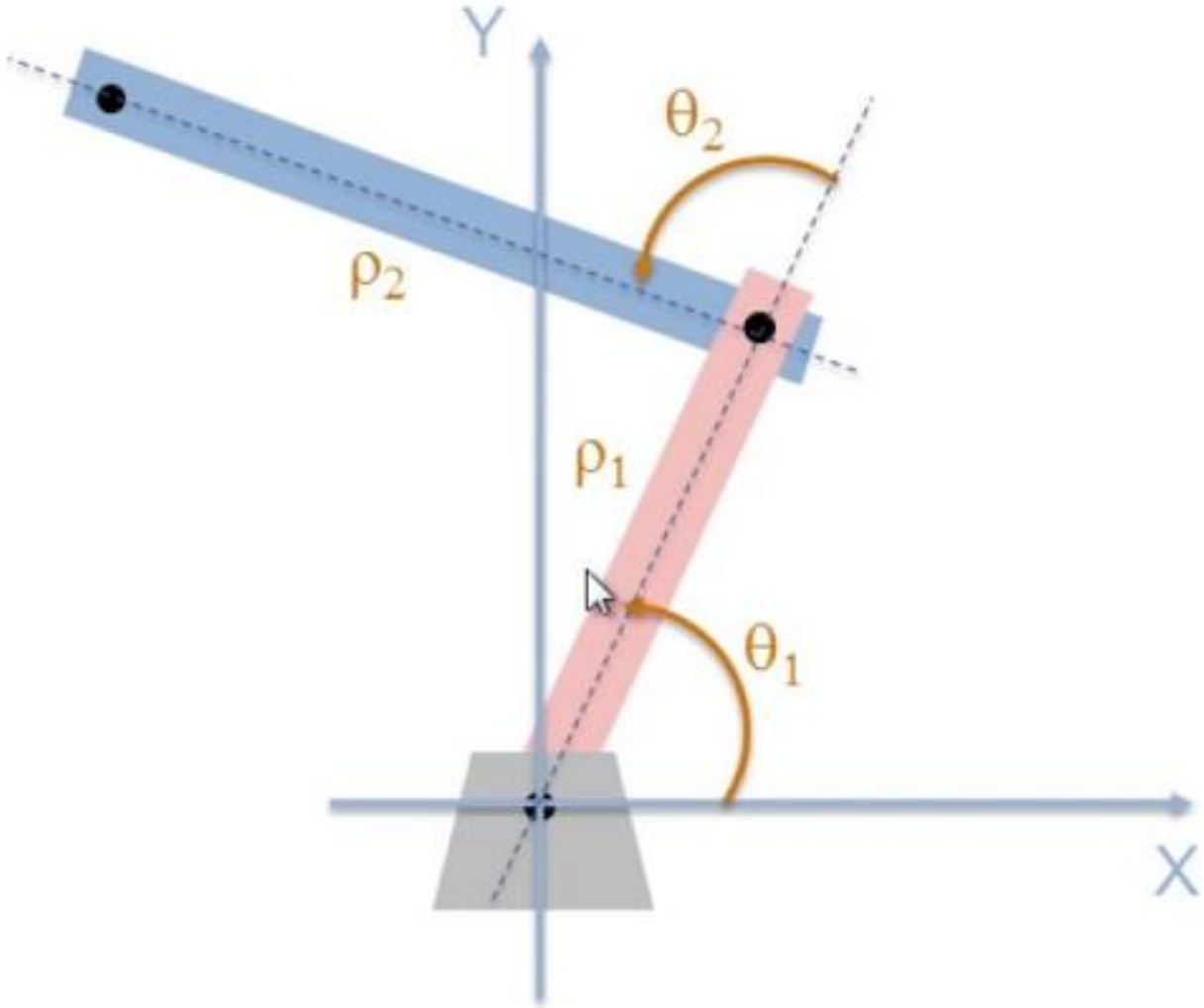

Mathematical Model

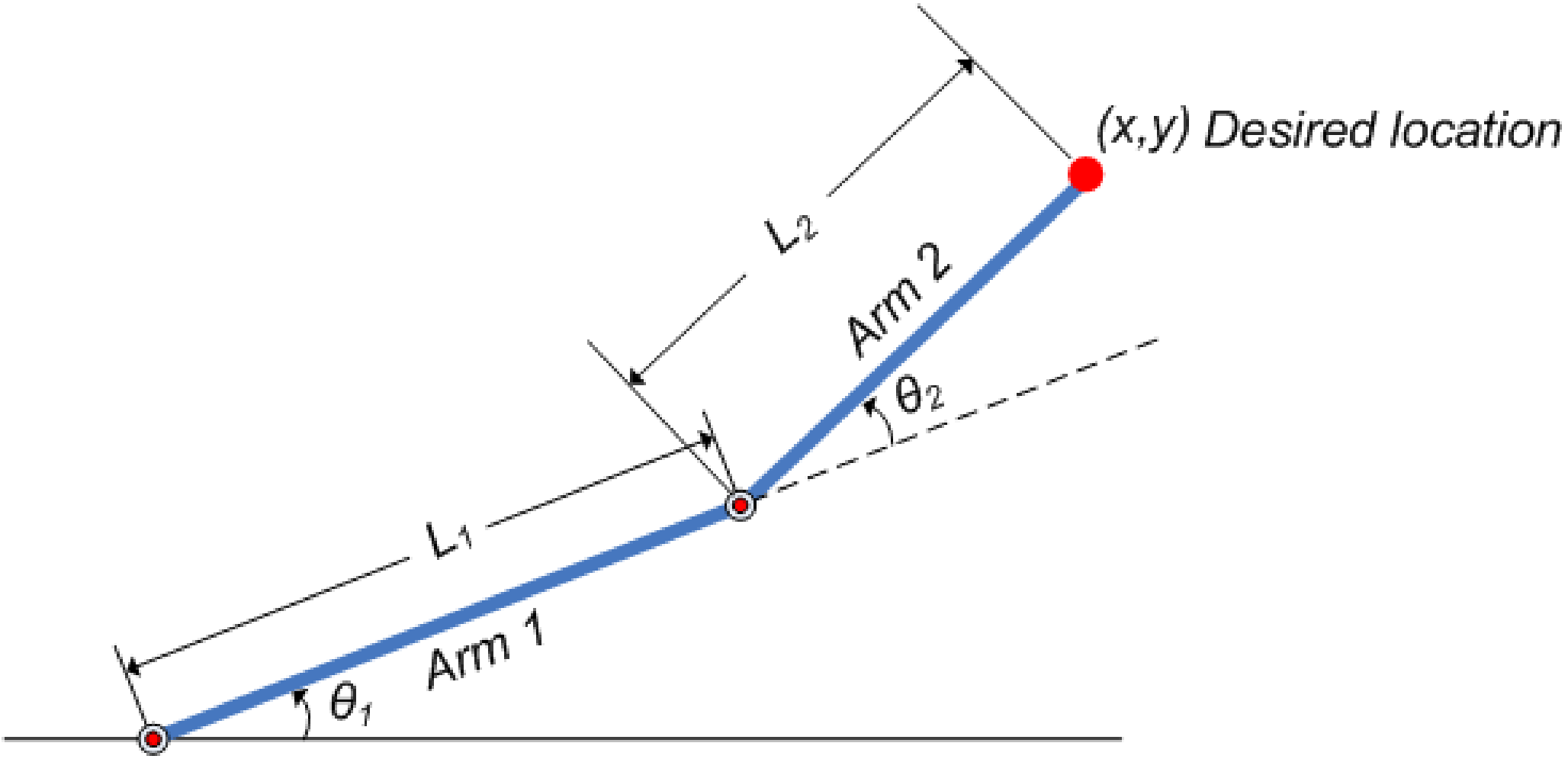

Manipulator Types

SECTION 4

Cartesian Manipulator

- Three prismatic joints
- Very good mechanical stiffness
- Wrist positioning accuracy constant everywhere in the workspace
- Low dexterity (all joints prismatic)
- Electric (seldom hydraulic) actuation
- Employed for transportation and assembly
- Manipulation of objects of large dimensions and heavy weight $\Longrightarrow$ gantry structure

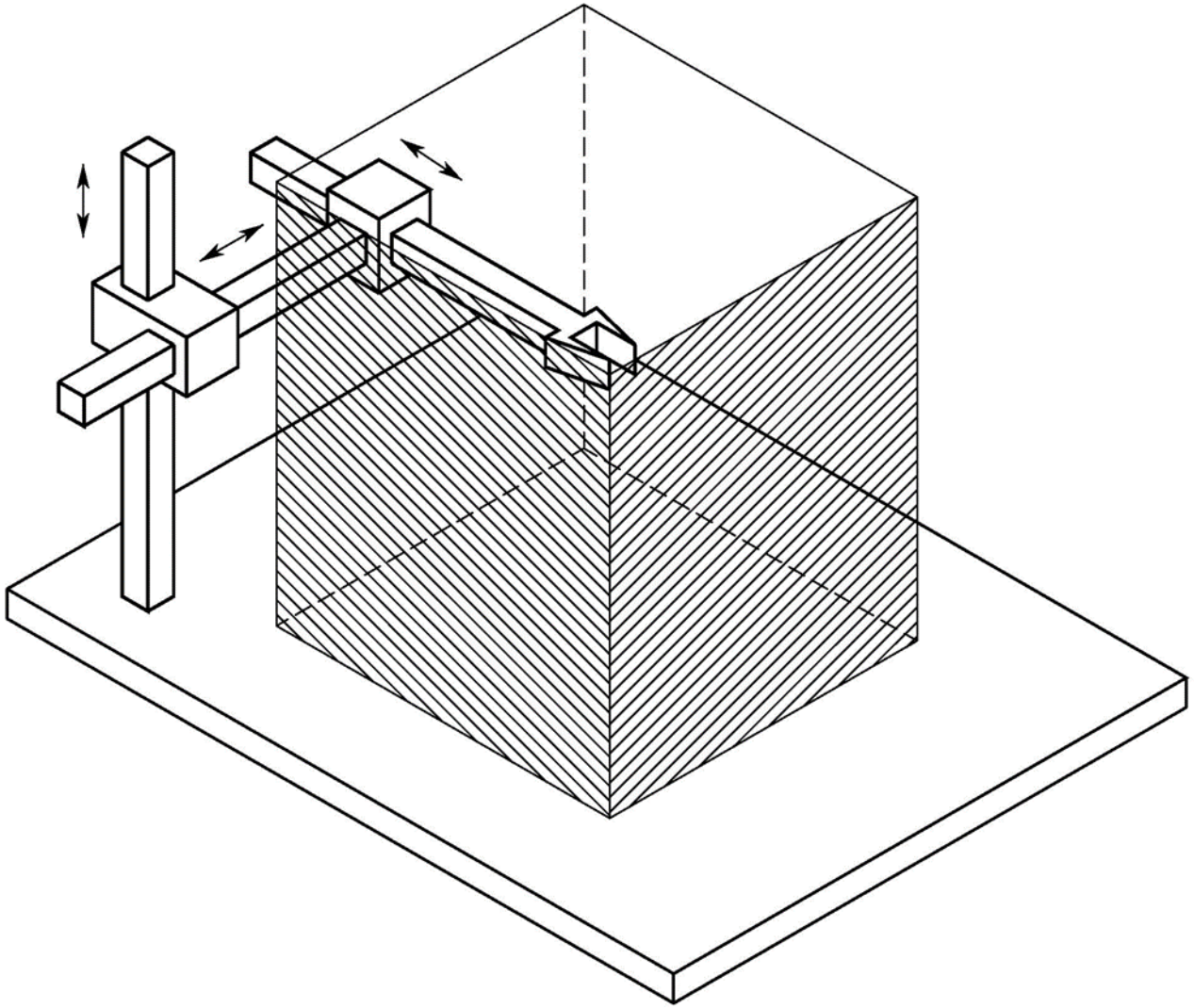

Cartesian manipulator and its workspace

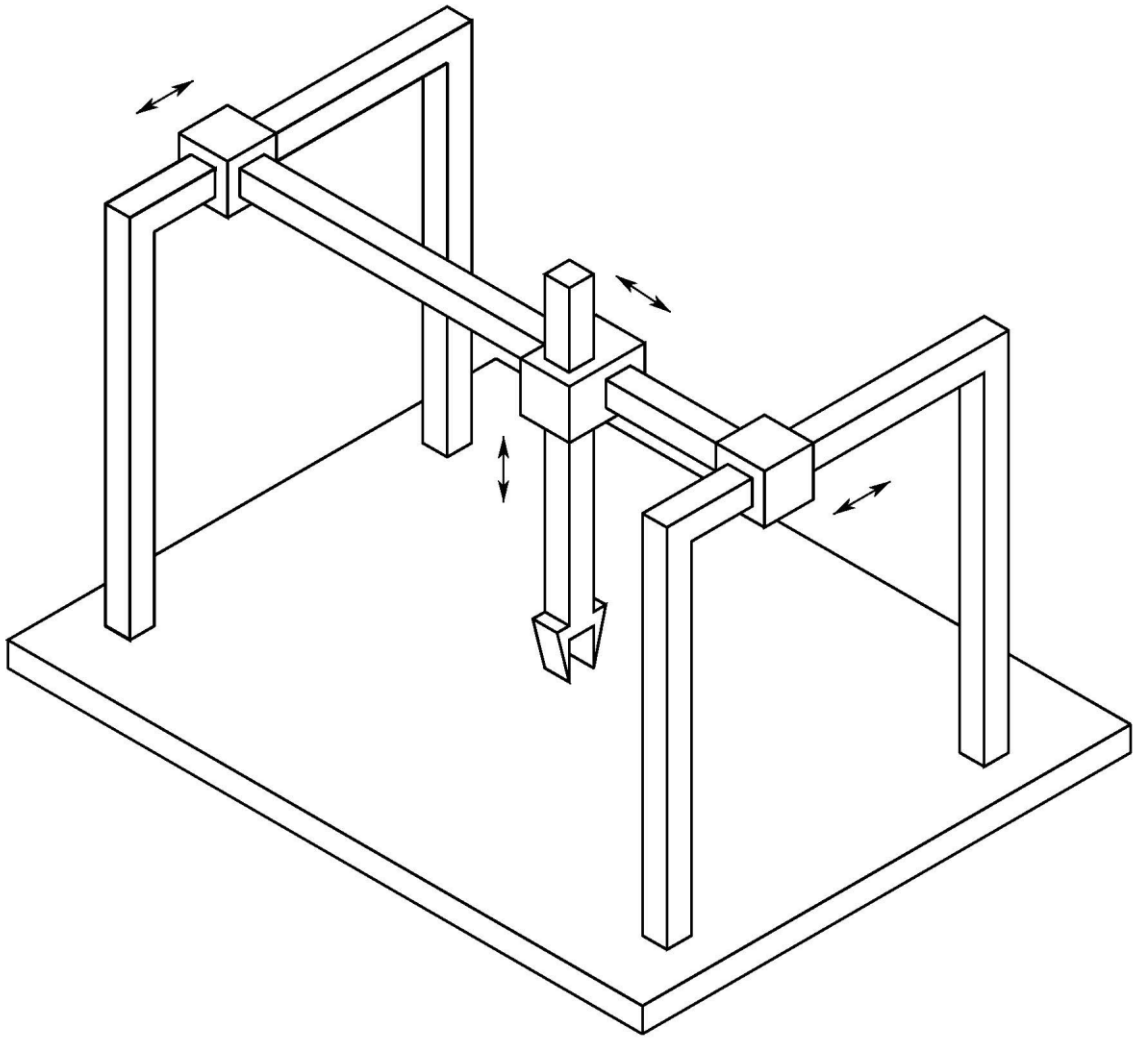

Gantry manipulator

Cylindrical Manipulator

- One revolute joint and two prismatic joints
- Good mechanical stiffness
- Wrist positioning accuracy decreases as horizontal stroke increases
- Horizontal prismatic joint makes wrist suitable to access horizontal cavities
- Employed for carrying objects even of large dimensions
- Hydraulic actuation preferred to electric actuation

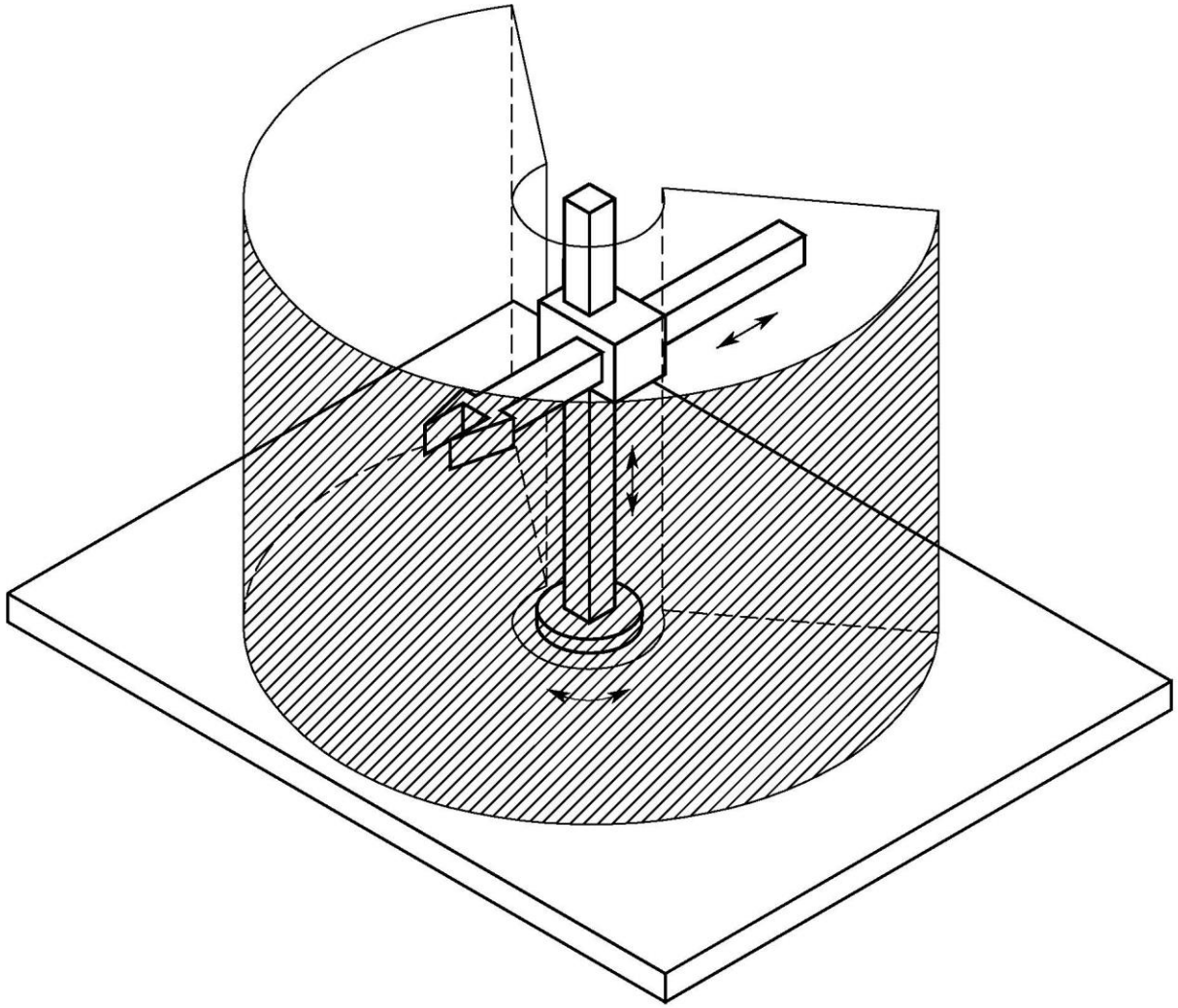

Cylindrical manipulator and its workspace

Spherical Manipulator

- Two revolute joints and one prismatic joint
- Fair mechanical stiffness
- Wrist positioning accuracy decreases as radial stroke increases
- Employed for machining
- Electric actuation

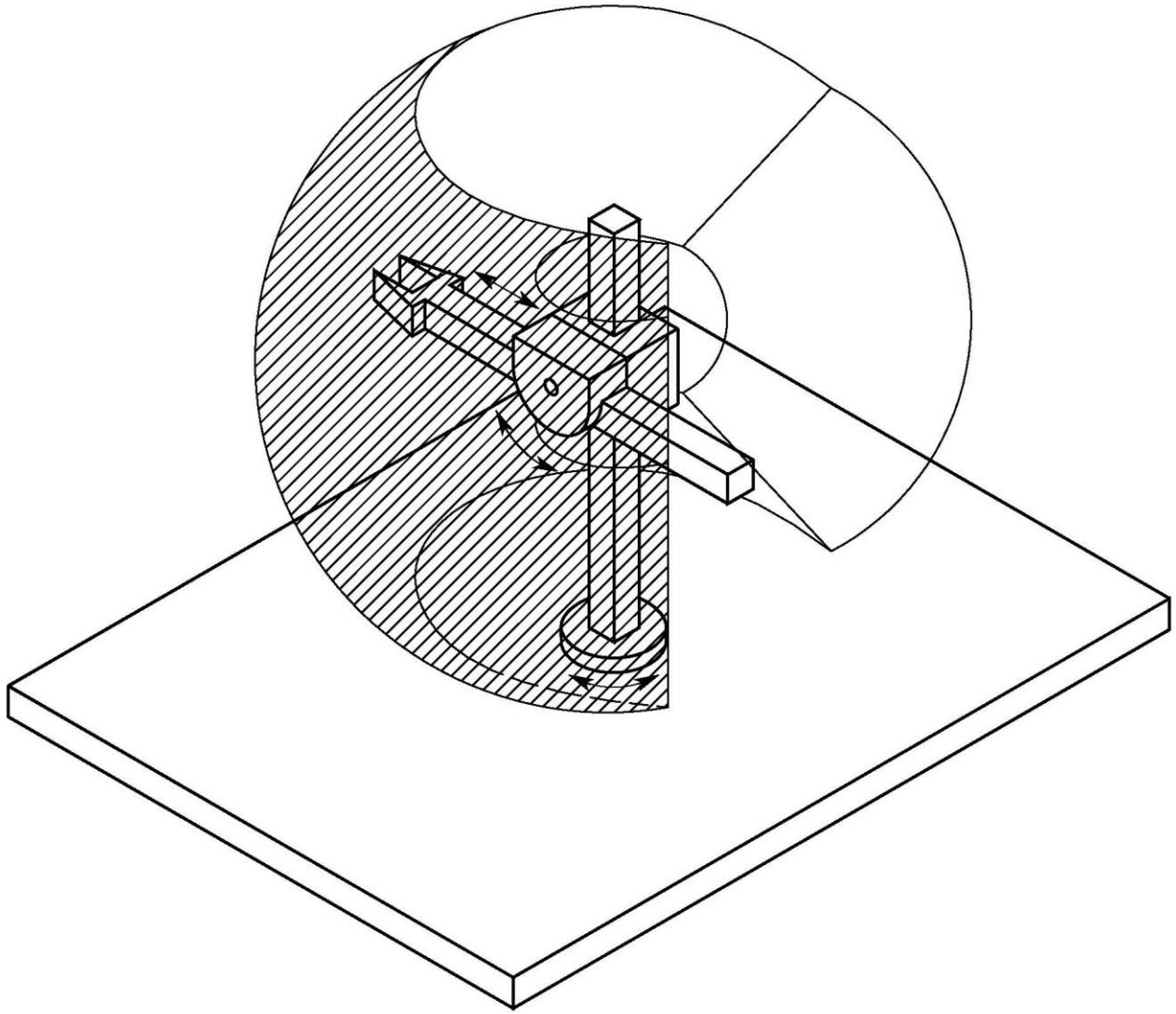

Spherical manipulator and its workspace

SCARA Manipulator

- Two revolute joints and one prismatic joint (all axes of motion are parallel)
- High stiffness to vertical loads and compliance to horizontal loads Selective Compliance Assembly Robot Arm
- Positioning accuracy decreases as distance of wrist from first joint axis increases
- Employed for manipulation of small objects (vertical assembly tasks)
- Electric actuation

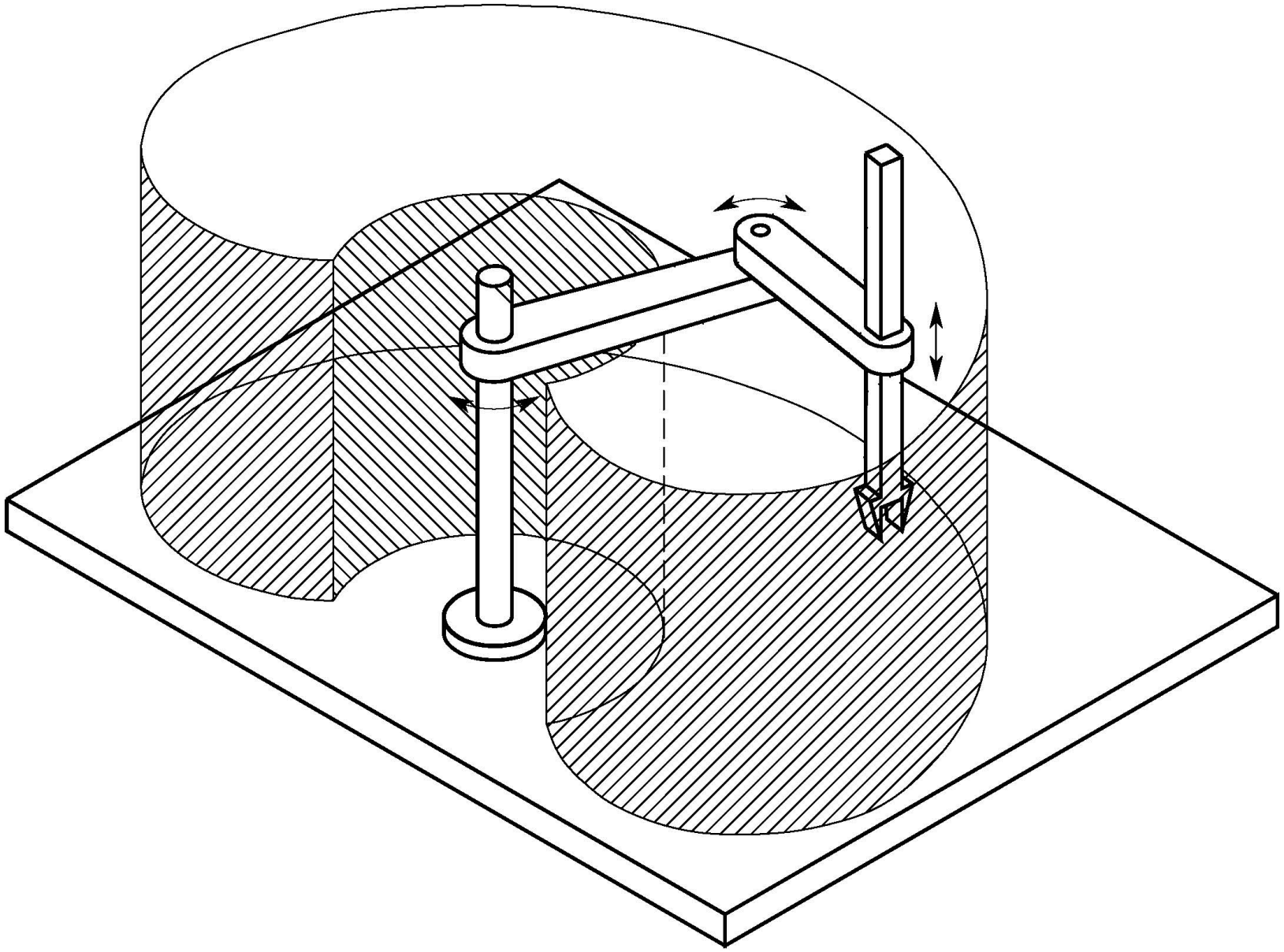

SCARA manipulator and its workspace

Anthropomorphic Manipulator

- Three revolute joints
- Most dexterous structure (similarity with human arm)
- Wrist positioning accuracy varies inside workspace
- Wide range of industrial applications
- Electric actuation
- Manipulation of larger payloads $\Longrightarrow$ closed kinematic chain with higher stiffness to guarantee comparable positioning accuracy (parallelogram geometry between shoulder and elbow joints)

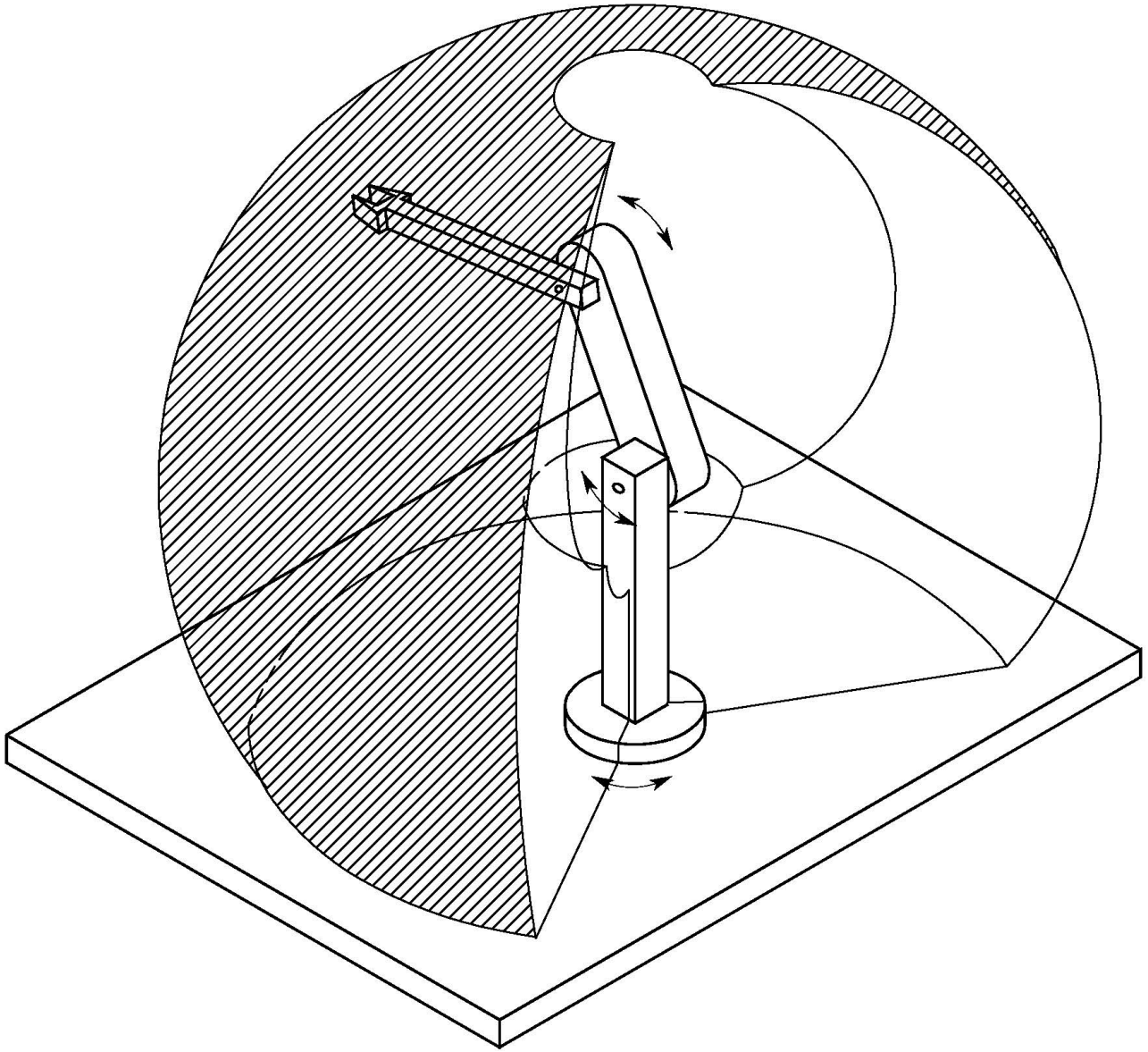

Anthropomorphic manipulator and its workspace

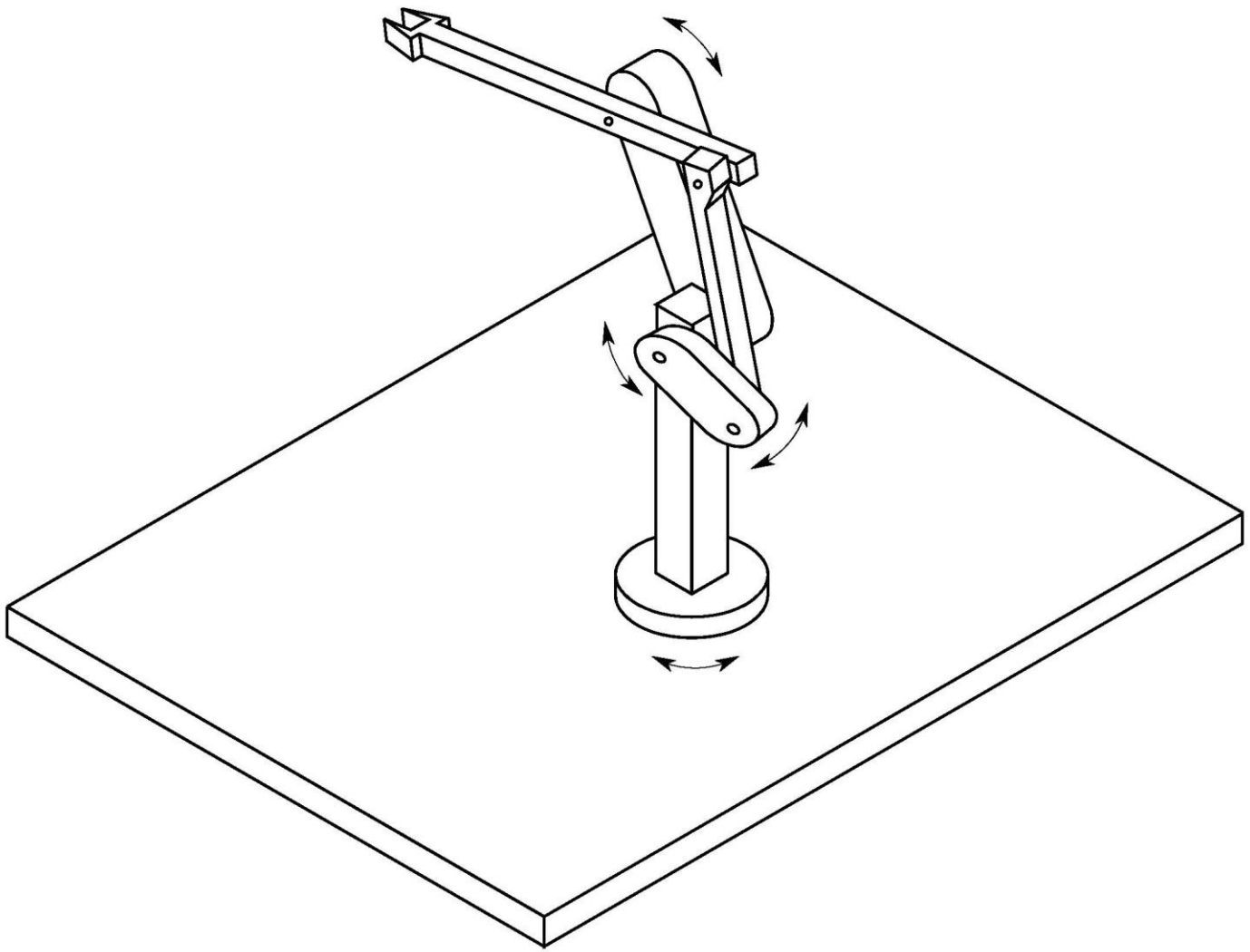

Manipulator with parallelogram

Parallel Manipulator

- Multiple kinematic chains connecting base to end-effector
- High structural stiffness
- High operational speeds
- Reduced workspace

Hybrid structure employed for execution of manipulation tasks requiring large values of force along vertical direction

- Parallel arm
- Serial kinematic chain

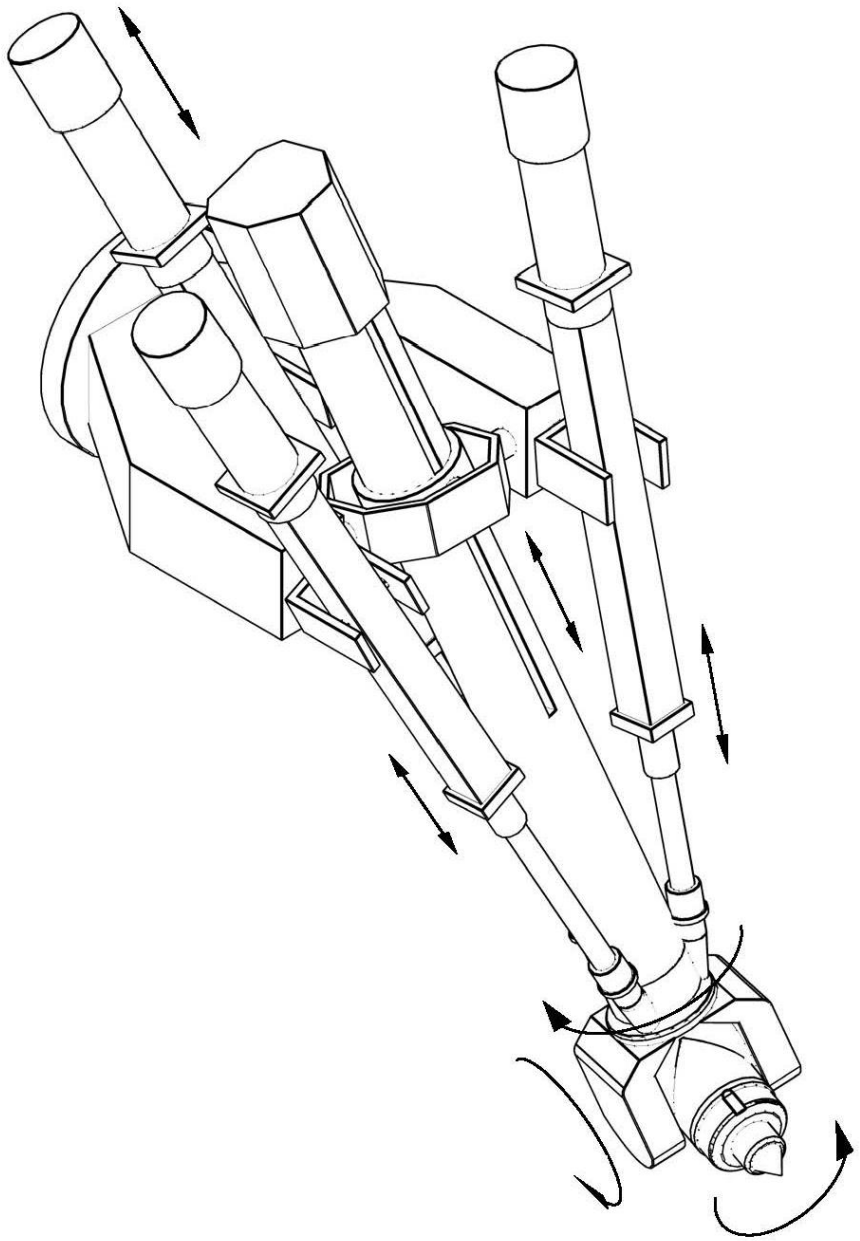

Hybrid parallel-serial manipulator

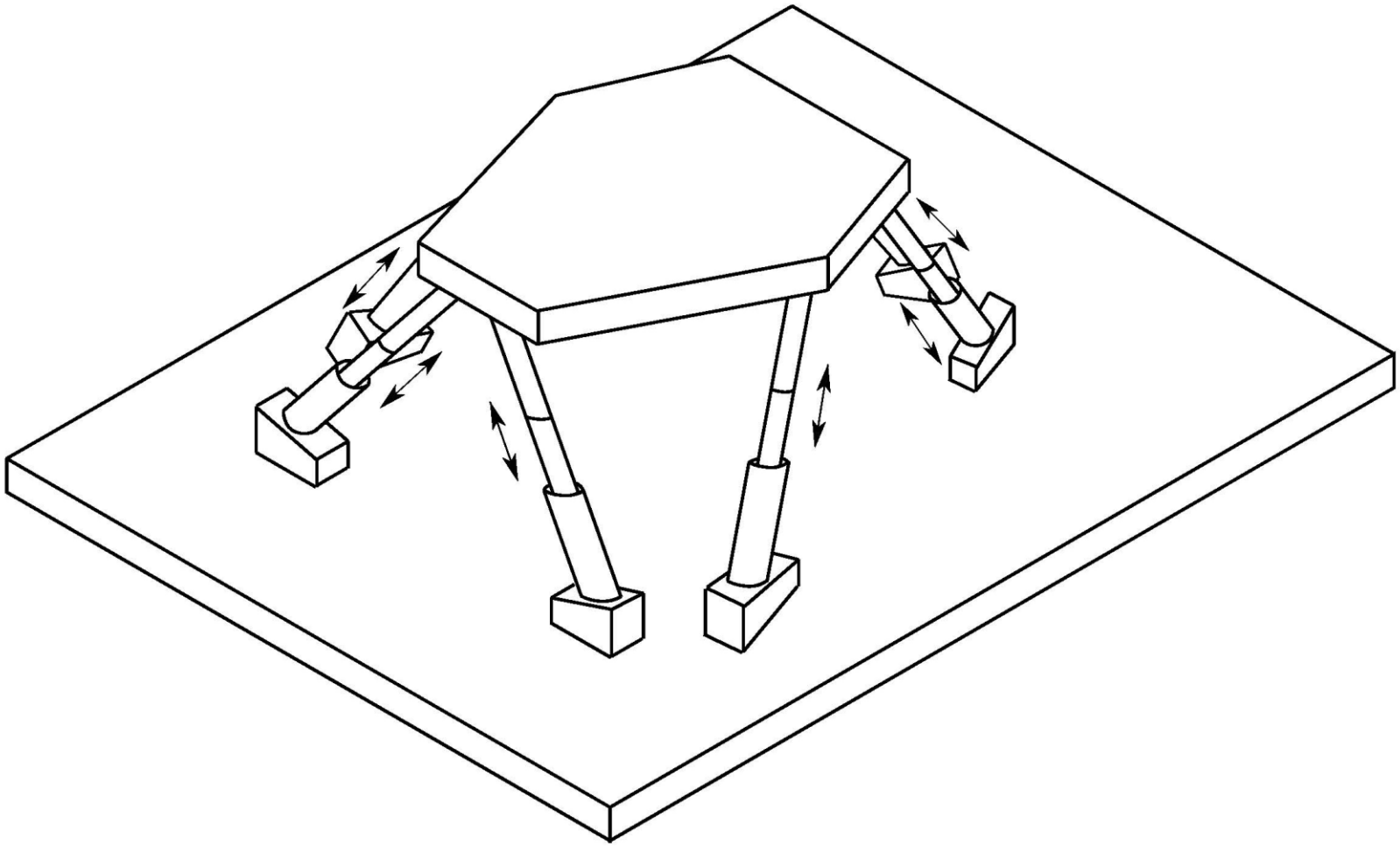

Parallel manipulator

Wrist and End-effector

Spherical Wrist

- Three revolute joints determining end-effector orientation
- High compactness and dexterity
- Position and orientation decoupling

End-effector

- Specified according to task the robot should execute
- For material handling tasks gripper of proper shape and dimensions determined by object to be grasped
- For machining and assembly tasks tool or specialized device (welding torch, spray gun, mill, drill, screwdriver, etc)

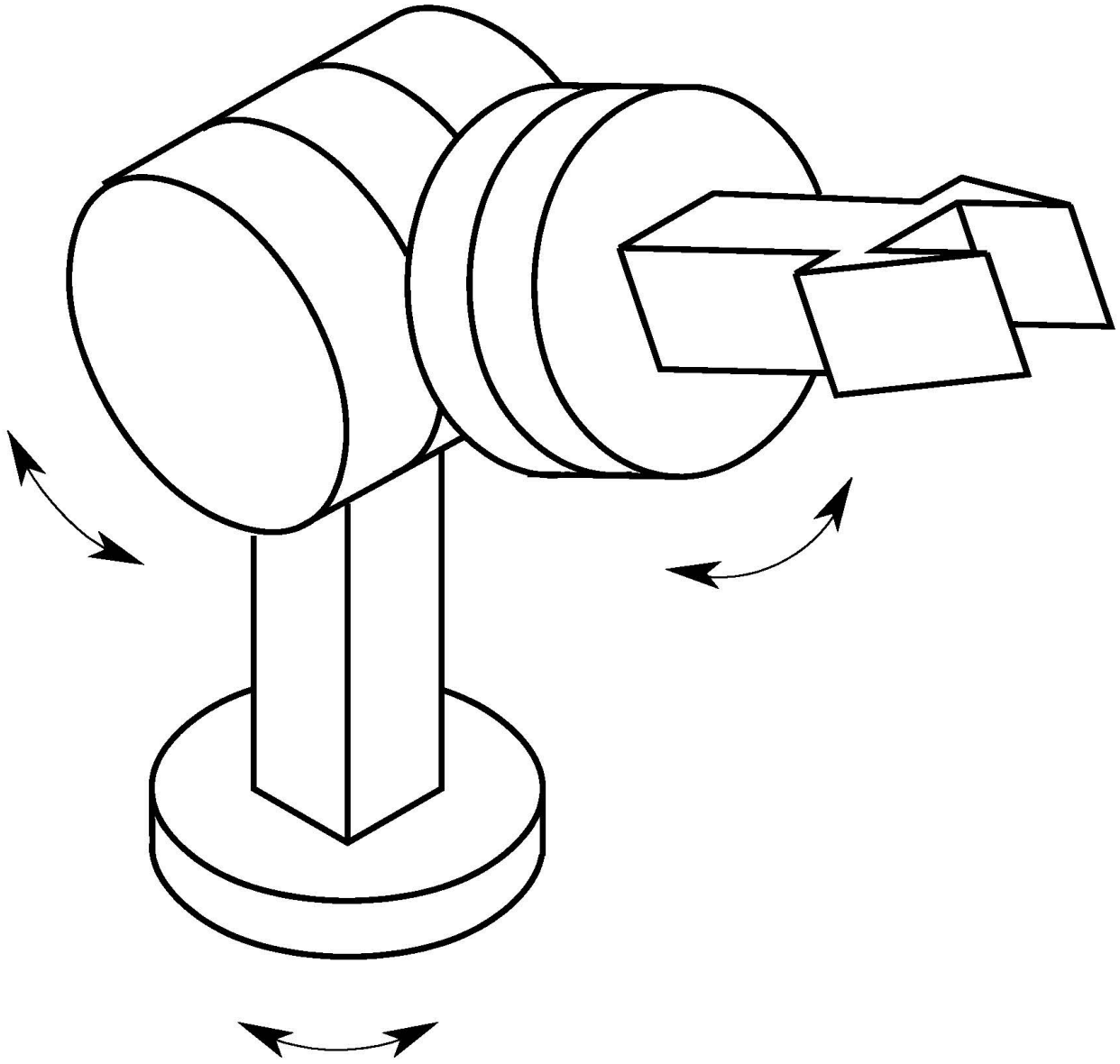

Spherical wrist

Mobile Robots

SECTION 5

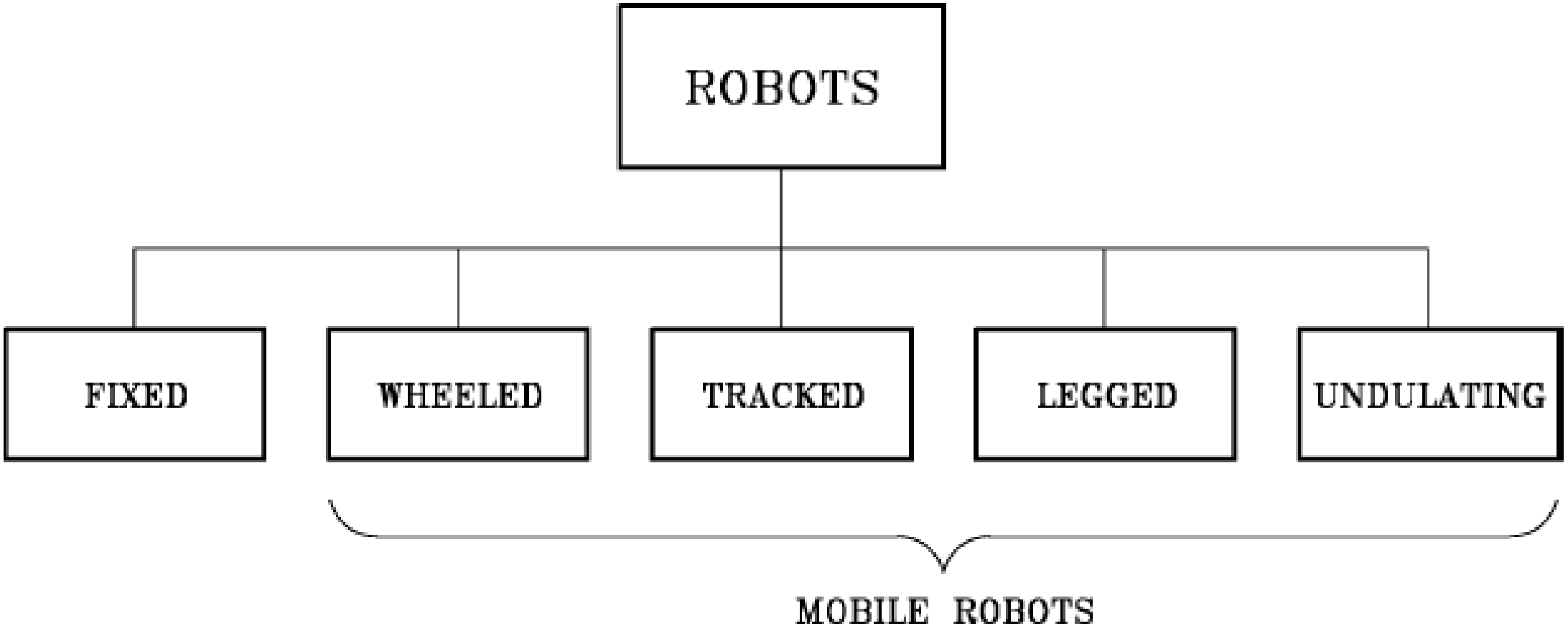
ROBOTS
FIXED
WHEELED
TRACKED
LEGGED
UNDULATING
MOBILE ROBOTS

Mobile Robots

- Mobile robots are introduced to provide locomotion to robotic systems
- Wheeled mobile robots are classified according to different types of wheels
- Mobile manipulation combines dexterity of the articulated arm with unlimited mobility of the base

Wheeled Mobile Robots

The mechanical structure of a mobile robot consists of one or more rigid bodies equipped with a *locomotion* system

Wheeled mobile robots

- *Base* (chassis)
- *Wheel*s (providing motion with respect to ground)
- Eventually trailers, also equipped with wheels, connected to base by means of revolute joints

Legged mobile robots

- Multiple *limbs*
- *Feet* periodically in contact with ground to realize locomotion
- Design often inspired by living organisms (*biomimetic robotics*)

Conventional Wheels

Fixed Wheel

- Can rotate about an axis going through center of wheel and orthogonal to wheel plane
- Constant orientation with respect to chassis (rigidly attached)

Conventional Wheels

Steerable Wheel

- First rotation axis same as fixed wheel
- Second rotation axis going through center of wheel
- Variable orientation with respect to chassis

Conventional Wheels

Caster Wheel

- Vertical axis not going through center of wheel (displaced by constant offset)
- Automatic swivel rapidly aligning with direction of motion of chassis
- Supporting point for static balance without affecting mobility of chassis (commonly used in shopping carts and wheelchairs)

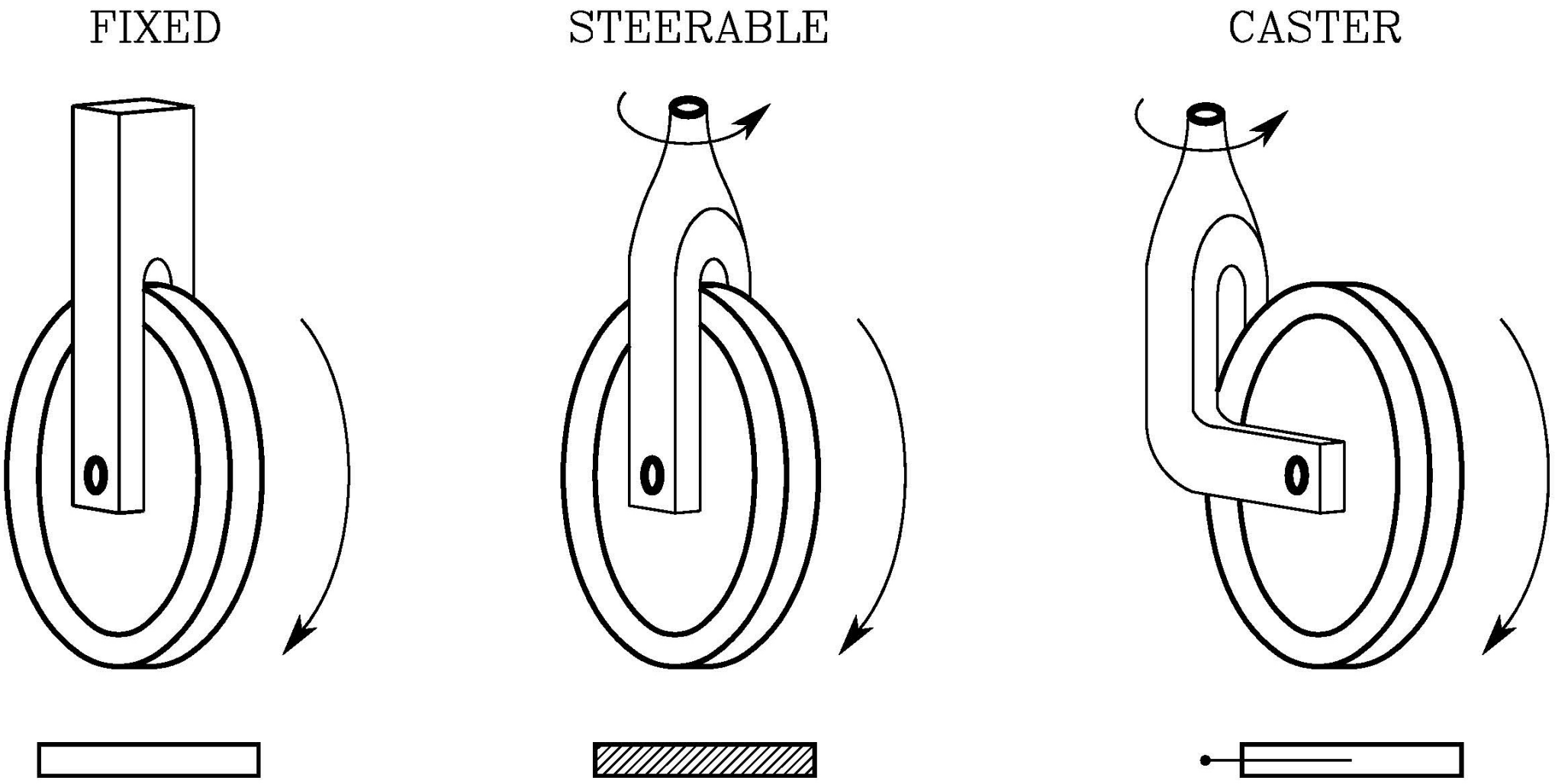
FIXED
STEERABLE
CASTER

Differential-drive Mobile Robot

- Two fixed wheels with common axis of rotation, separately controlled
- One or more passive caster wheels, whose function is to keep robot statically balanced
- Can rotate on the spot, without moving midpoint between wheels, provided that angular velocities of the two wheels are equal and opposite

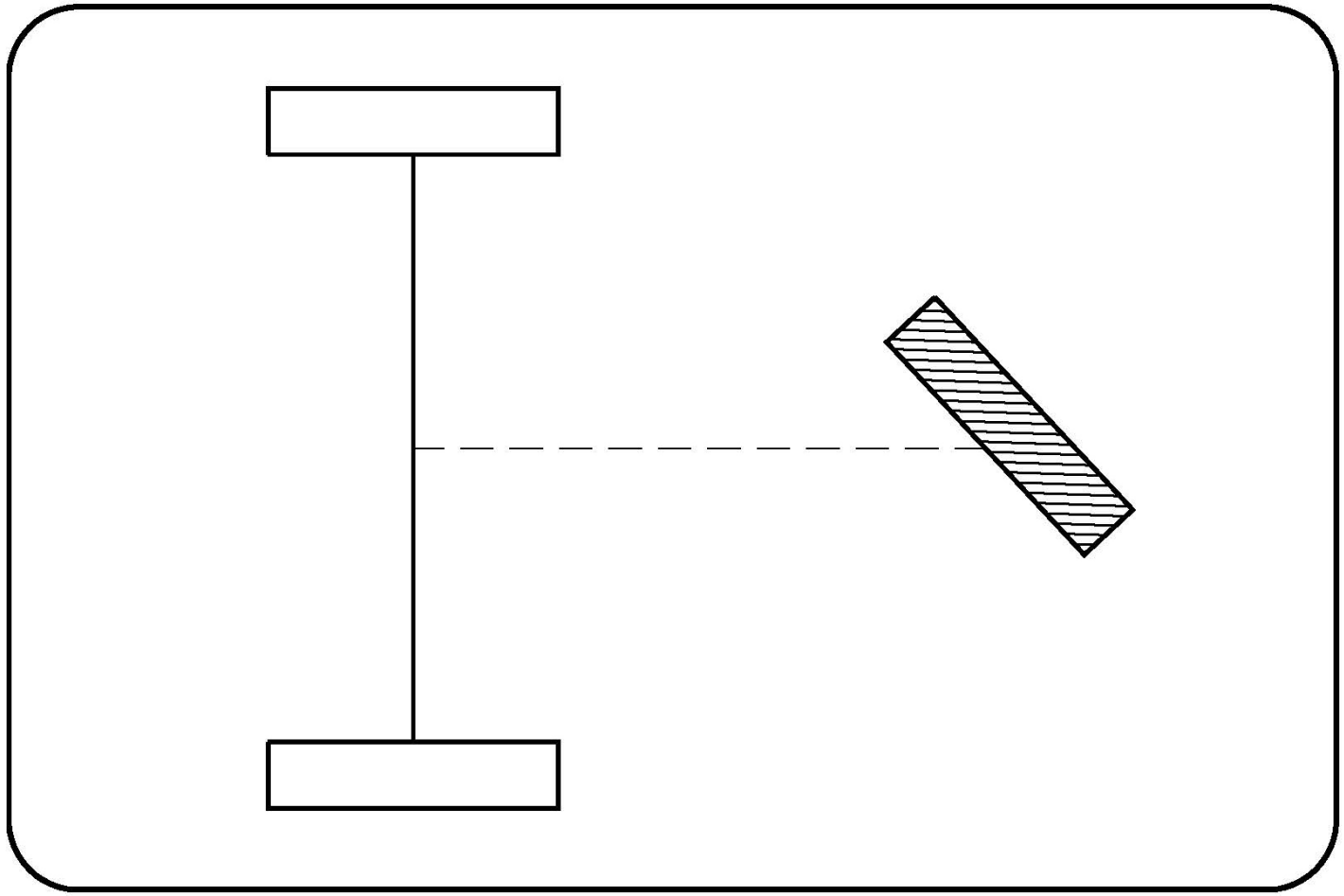

A Differential-Drive Mobile Robot

Synchro-drive Mobile Robot

- Three aligned steerable wheels synchronously driven by only two motors through mechanical coupling (chain or transmission belt)
- First motor controls rotation of wheels about horizontal axis (vehicle traction)
- Second motor controls rotation of wheels about vertical axis (vehicle steering)
- Often, third motor used to rotate independently upper part of chassis (turret) with respect to lower part (orienting directional sensor or recovering orientation error)

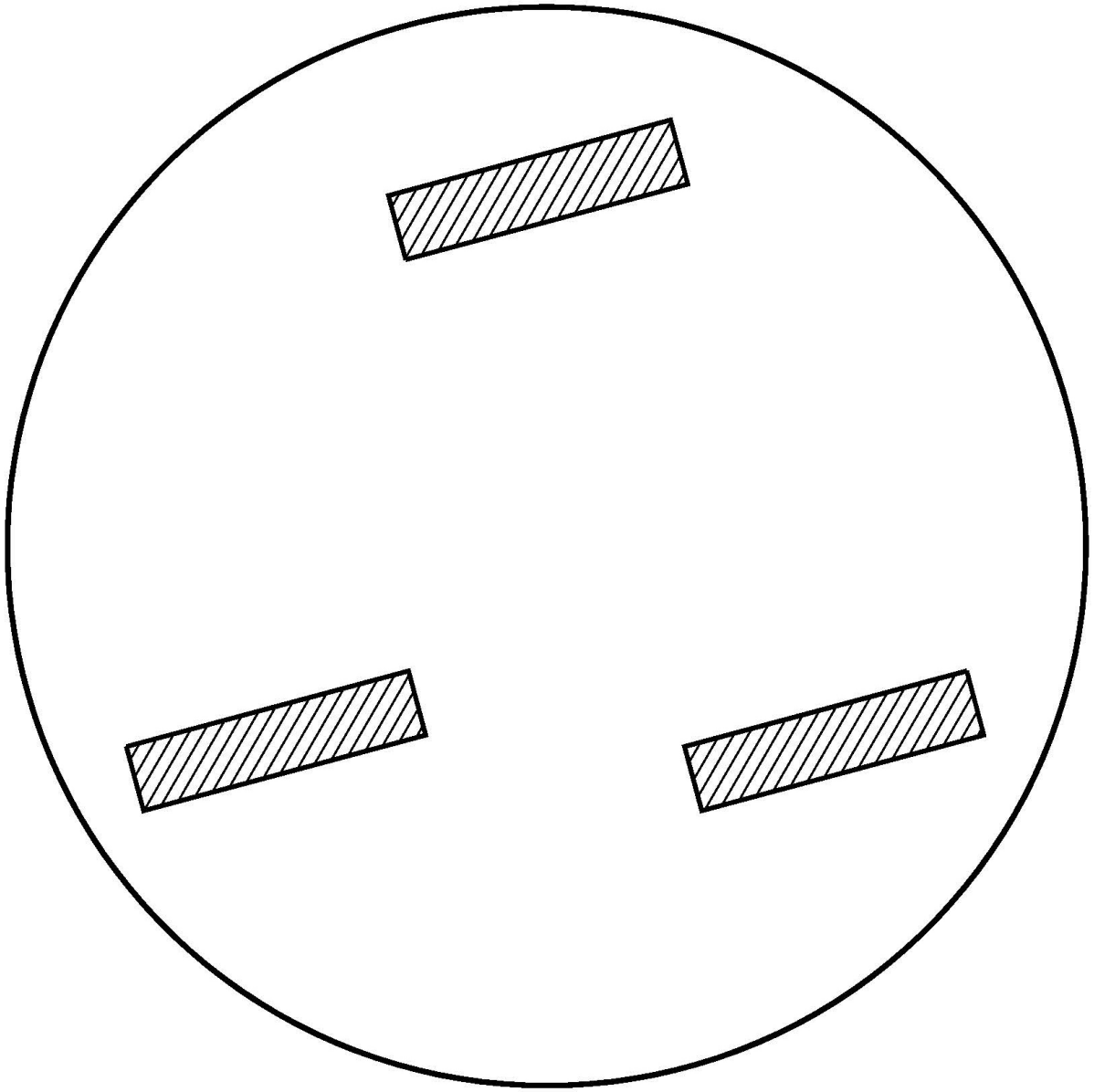

A Synchro-Drive Mobile Robot

Tricycle Mobile Robot

- Two fixed wheels mounted on rear axle, driven by single motor controlling their traction)
- Steerable front wheel, driven by another motor
- Alternatively, two passive rear wheels and front wheel providing traction and steering

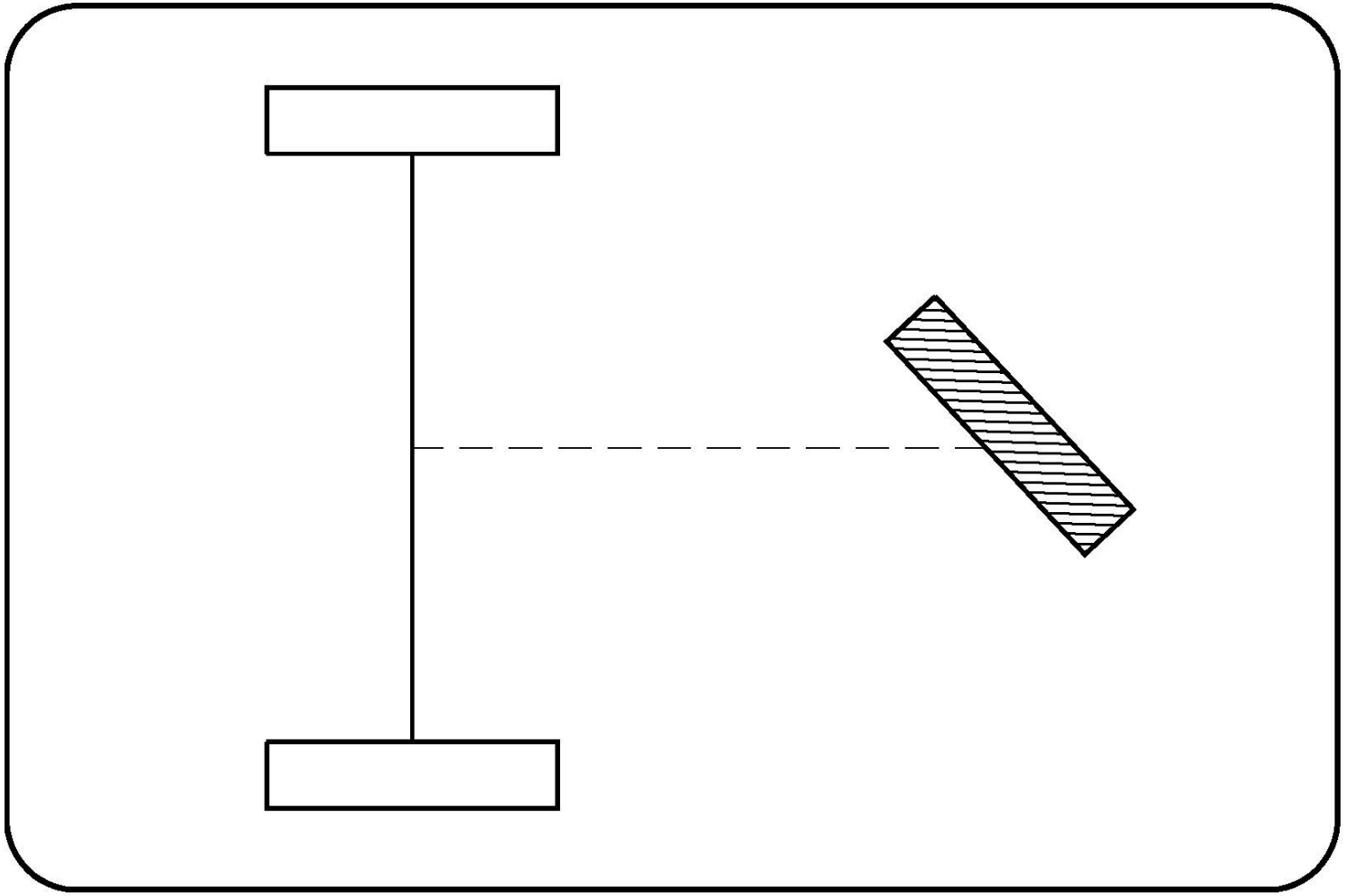

A Tricycle Mobile Robot

Car-like Mobile Robot

- Two fixed wheels mounted on rear axle
- Two steerable wheels mounted on front axle
- One motor provides (front or rear) traction
- Another motor changes orientation of front wheels with respect to chassis
- Two front wheels must have different orientation (avoiding slippage)
- Internal wheel slightly more steered with respect to external one (Ackermann steering device)

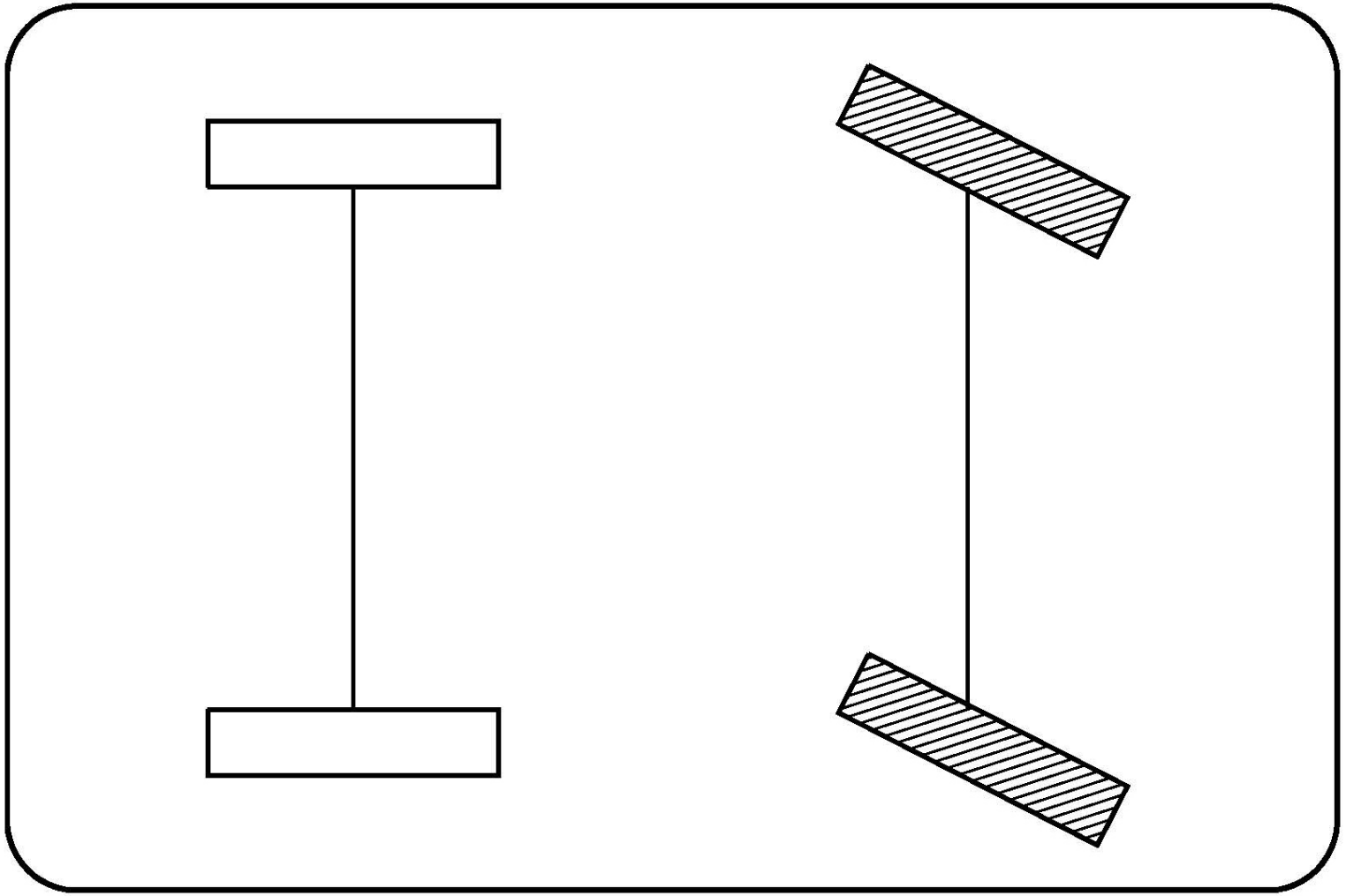

A Car-like Mobile Robot

Omnidirectional Mobile Robot

- Three caster wheels usually arranged in symmetric pattern
- Their traction velocities are independently driven
- Can move instantaneously in any Cartesian direction as well as re-orient itself on the spot

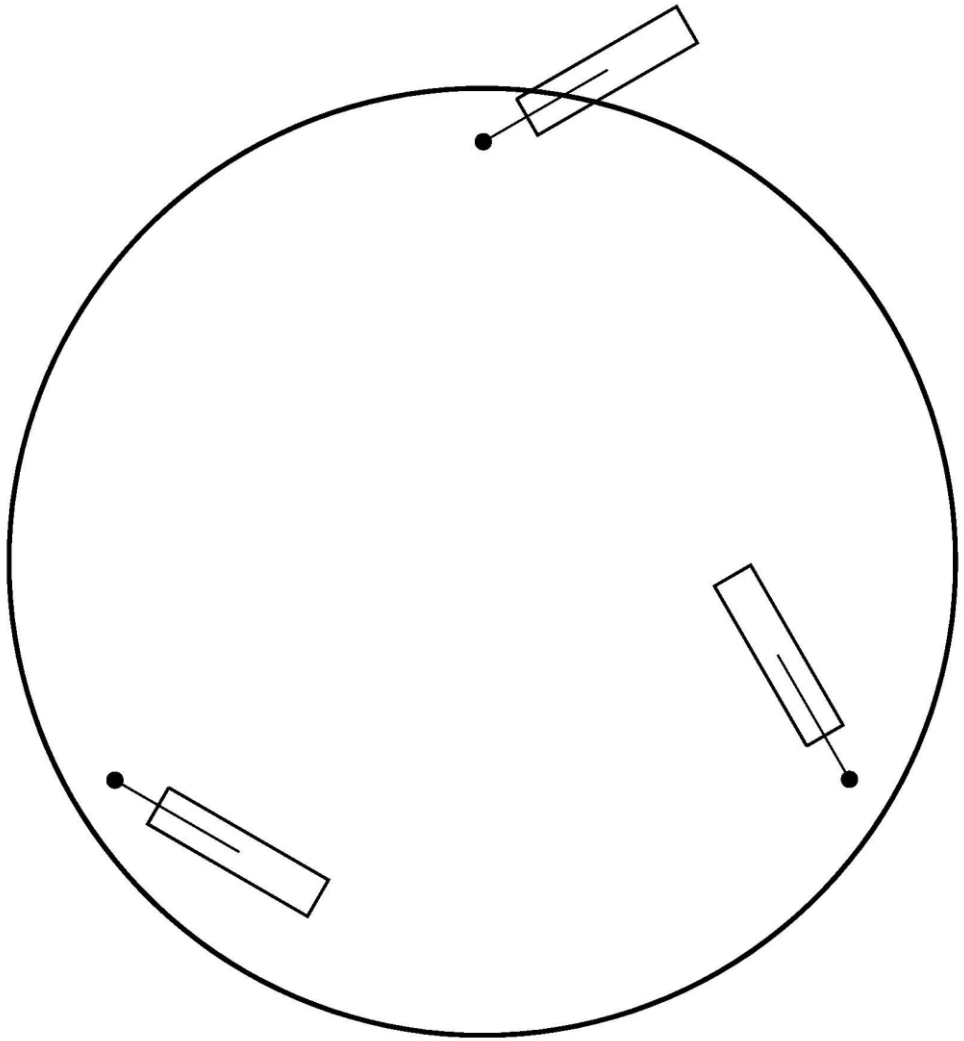

An Omnidirectional Mobile Robot with Three Independently Driven Caster Wheels

Mecanum Wheel

- Fixed wheel with passive rollers placed along external rim
- Axis of rotation of each roller typically inclined by 45° with respect to plane of wheel
- Vehicle equipped with four mecanum wheels mounted in pairs on two parallel axles is also omnidirectional

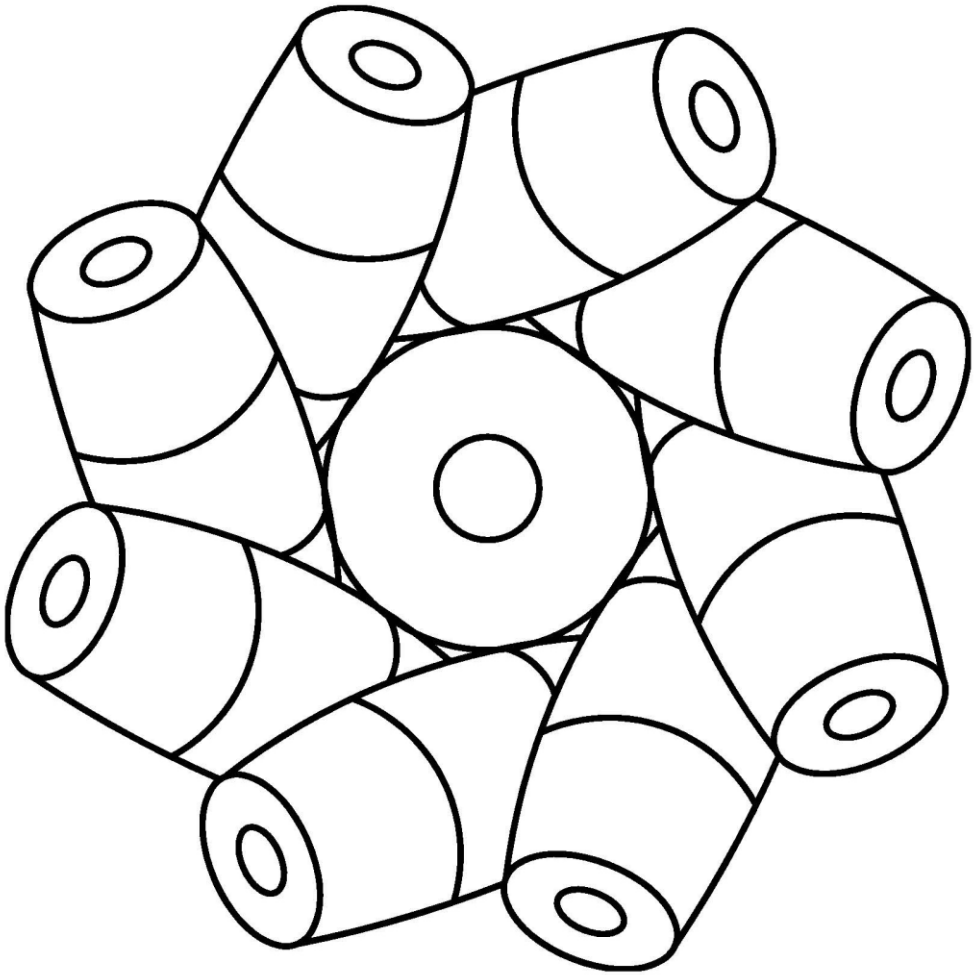

A Mecanum (or Swedish) wheel

Mobile Robots Features

SECTION 6

Mobile Robots Features

Balance

- A three-wheel robot is statically balanced as long as its center of mass falls inside the *support triangle* defined by the contact points between wheels and ground
- Robots with more than three wheels have a support polygon (typically easier to guarantee balance)
- When robot moves on uneven terrain, a suspension system is needed to maintain contact between each wheel and ground

Mobile Robots Features

Workspace

- Workspace of mobile robot potentially unlimited
- Local mobility of non-omnidirectional mobile robot always reduced
- A tricycle robot cannot move instantaneously in a direction parallel to rear wheel axle, yet can be manoeuvered so as to obtain net displacement in that direction at end of motion
- Number of robot's DOFs (number of admissible instantaneous motions) lower than number of its configuration variables

Mobile Manipulator

- Manipulator mounted on mobile base, combining dexterity of articulated arm with unlimited mobility of base
- Complex design related to robot's static and dynamic mechanical balance, as well as to actuation of the two systems

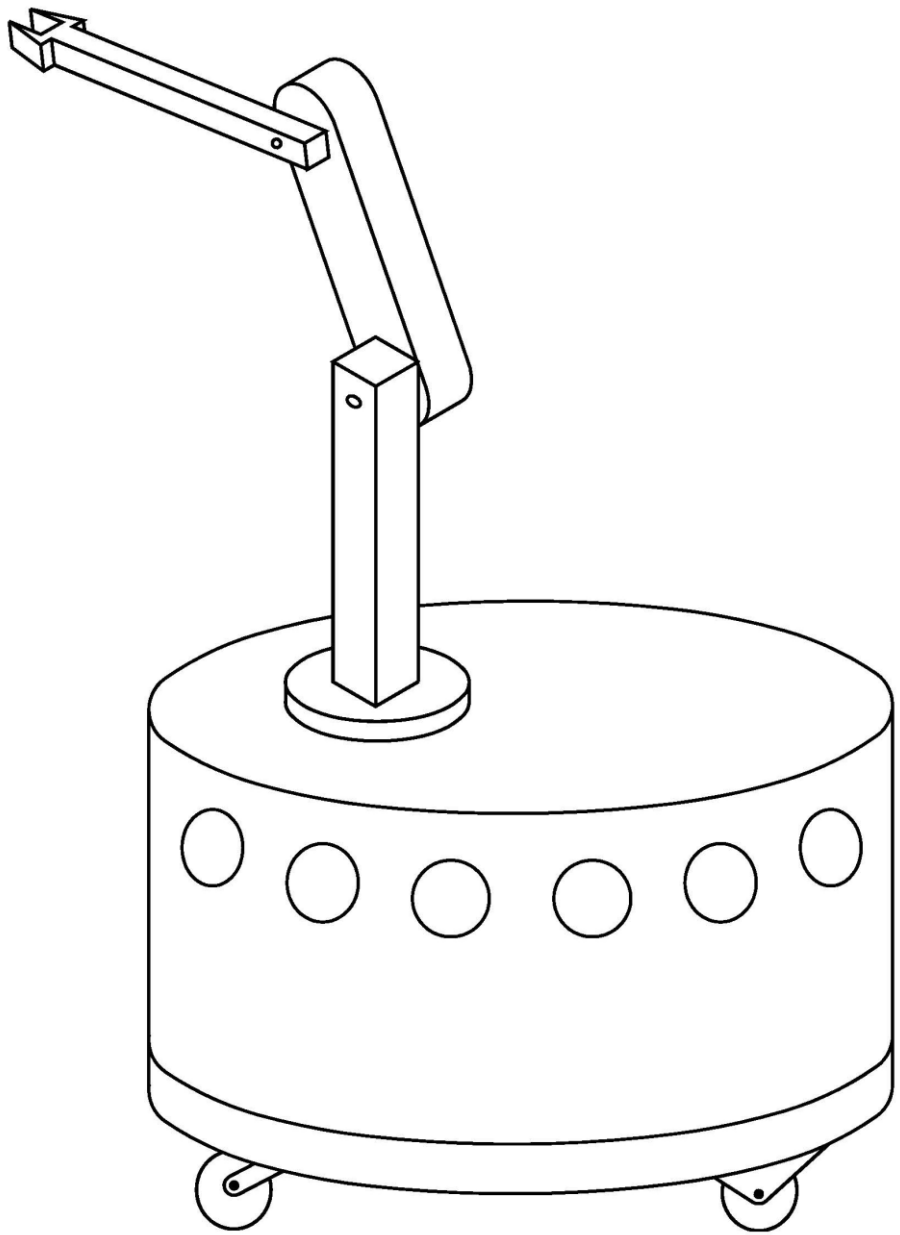

A mobile manipulator obtained by mounting an anthropomorphic arm on a differential-drive vehicle

Applications

SECTION 7

Unmanned ground vehicle

Robotic Cleaner

Construction Arm Robot