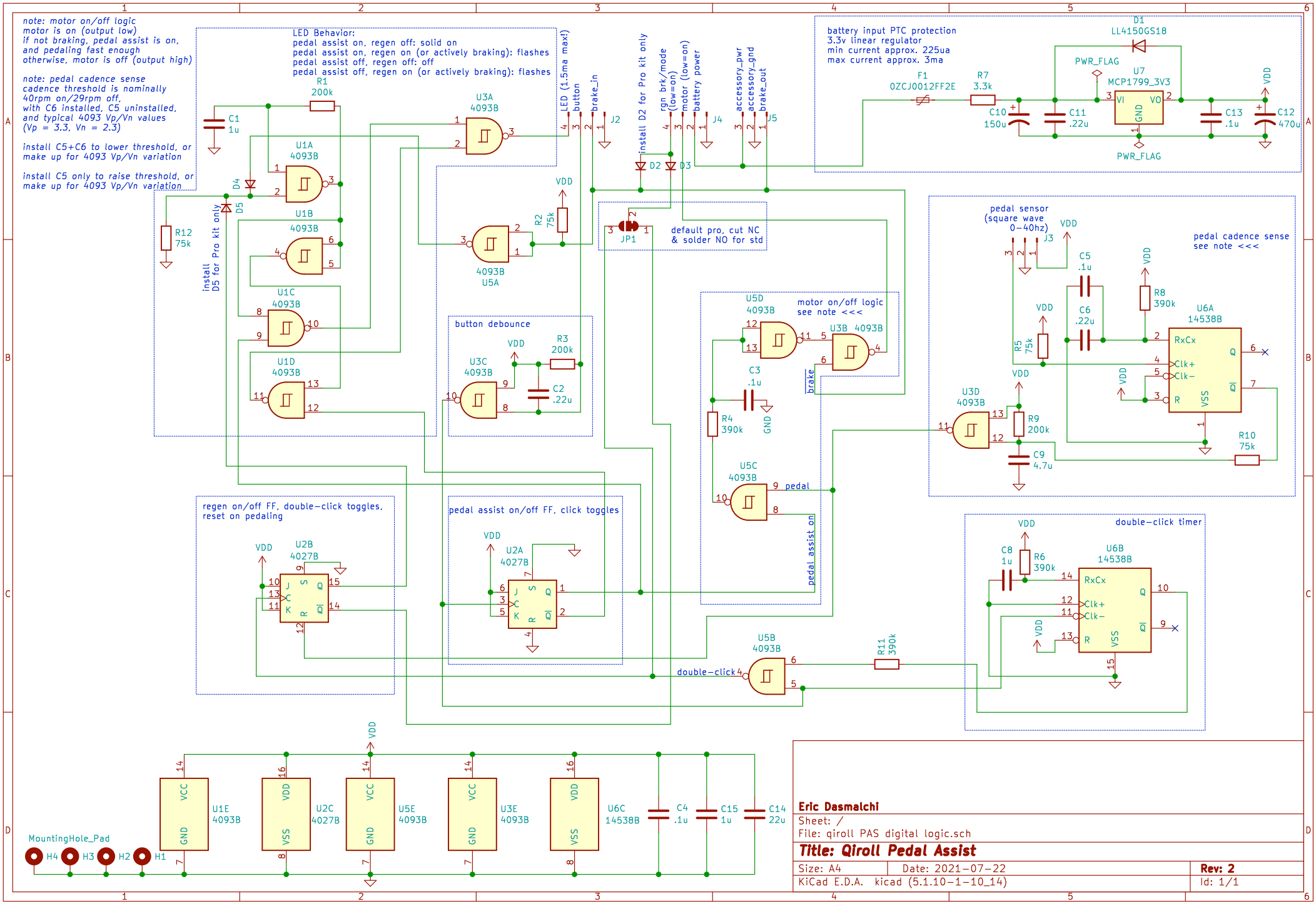
note: motor on/off logic
motor is on (output low)
if not braking, pedal assist is on,
and pedaling fast enough
otherwise, motor is off (output high)
note: pedal cadence sense
cadence threshold is nominally
40rpm on/29rpm off,
with C6 installed, C5 uninstalled,
and typical 4093 Vp/Vn values
(Vp = 3.3, Vn = 2.3)
install C5+C6 to lower threshold, or
make up for 4093 Vp/Vn variation
install C5 only to raise threshold, or
make up for 4093 Vp/Vn variation
LED Behavior:
pedal assist on, regen off: solid on
pedal assist on, regen on (or actively braking): flashes
pedal assist off, regen off: off
pedal assist off, regen on (or actively braking): flashes
LED (1.5ma max!)
button
brake_in
J2
install D2 for Pro kit only
rgn brk/mode (low=on)
motor (low=on)
battery power
J4
accessory_pwr
accessory_gnd
brake_out
J5
battery input PTC protection
3.3v linear regulator
min current approx. 225ua
max current approx. 3ma
D1
LL4150GS18
PWR_FLAG
U7
MCP1799_3V3
F1
0ZCJ0012FF2E
R7
3.3k
C10
150u
C11
.22u
C13
.1u
C12
470u
VDD
R1
200k
C1
1u
U1A
4093B
U1B
4093B
U1C
4093B
U1D
4093B
U3A
4093B
U5A
4093B
R2
75k
D2
D3
D4
D5
R12
75k
install
D5 for Pro kit only
default pro, cut NC
& solder NO for std
JP1
button debounce
U3C
4093B
R3
200k
C2
.22u
U5D
4093B
U3B
4093B
motor on/off logic
see note <<<
brake
C3
.1u
R4
390k
GND
U5C
4093B
pedal
pedal assist on
pedal sensor
(square wave
0-40hz)
J3
C5
.1u
C6
.22u
R8
390k
R5
75k
U6A
14538B
RxCx
Clk+
Clk-
Q
QI
R
VSS
pedal cadence sense
see note <<<
U3D
4093B
R9
200k
C9
4.7u
R10
75k
regen on/off FF, double-click toggles,
reset on pedaling
U2B
4027B
J
C
K
S
R
Q
QI
pedal assist on/off FF, click toggles
U2A
4027B
double-click
U5B
4093B
R11
390k
double-click timer
C8
1u
R6
390k
U6B
14538B
U1E
4093B
U2C
4027B
U5E
4093B
U3E
4093B
U6C
14538B
VCC
GND
VDD
VSS
C4
.1u
C15
1u
C14
22u
MountingHole_Pad
H4
H3
H2
H1
Eric Dasmalchi
Sheet: /
File: qiroll PAS digital logic.sch
Title: Qiroll Pedal Assist
Size: A4
Date: 2021-07-22
Rev: 2
KiCad E.D.A. kicad (5.1.10-1-10_14)
Id: 1/1