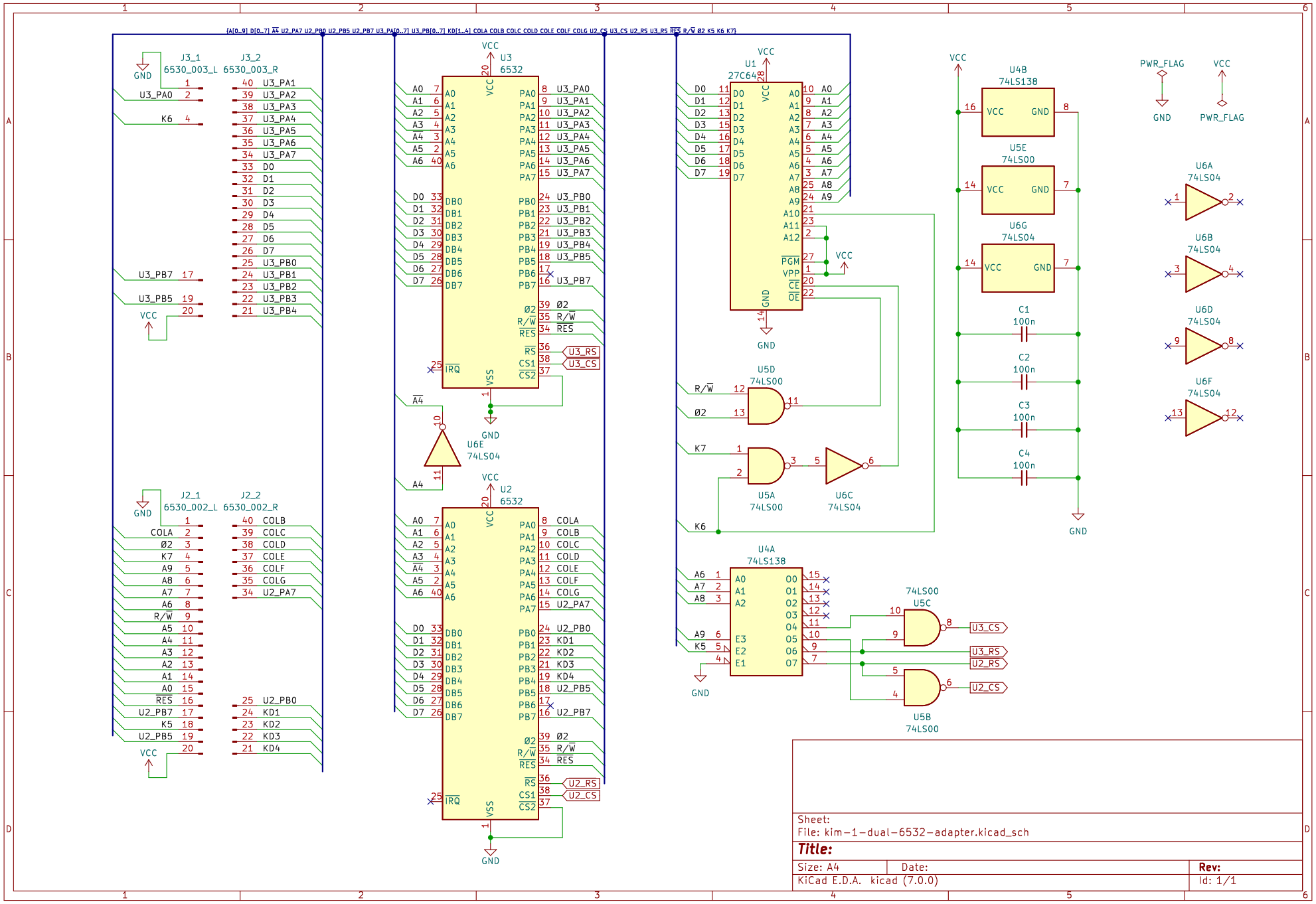
J3_1
6530_003_L
J3_2
6530_003_R
U3
6532
U1
27C64
U2
6532
U6E
74LS04
U5D
74LS00
U5A
74LS00
U6C
74LS04
U4A
74LS138
U5C
74LS00
U5B
74LS00
U4B
74LS138
U5E
74LS00
U6G
74LS04
C1
100n
C2
100n
C3
100n
C4
100n
U6A
74LS04
U6B
74LS04
U6D
74LS04
U6F
74LS04
PWR_FLAG
J2_1
6530_002_L
J2_2
6530_002_R
U3_RS
U3_CS
U2_RS
U2_CS
Sheet:
File: kim-1-dual-6532-adapter.kicad_sch
Title:
Size: A4
Date:
Rev:
KiCad E.D.A. kicad (7.0.0)
Id: 1/1