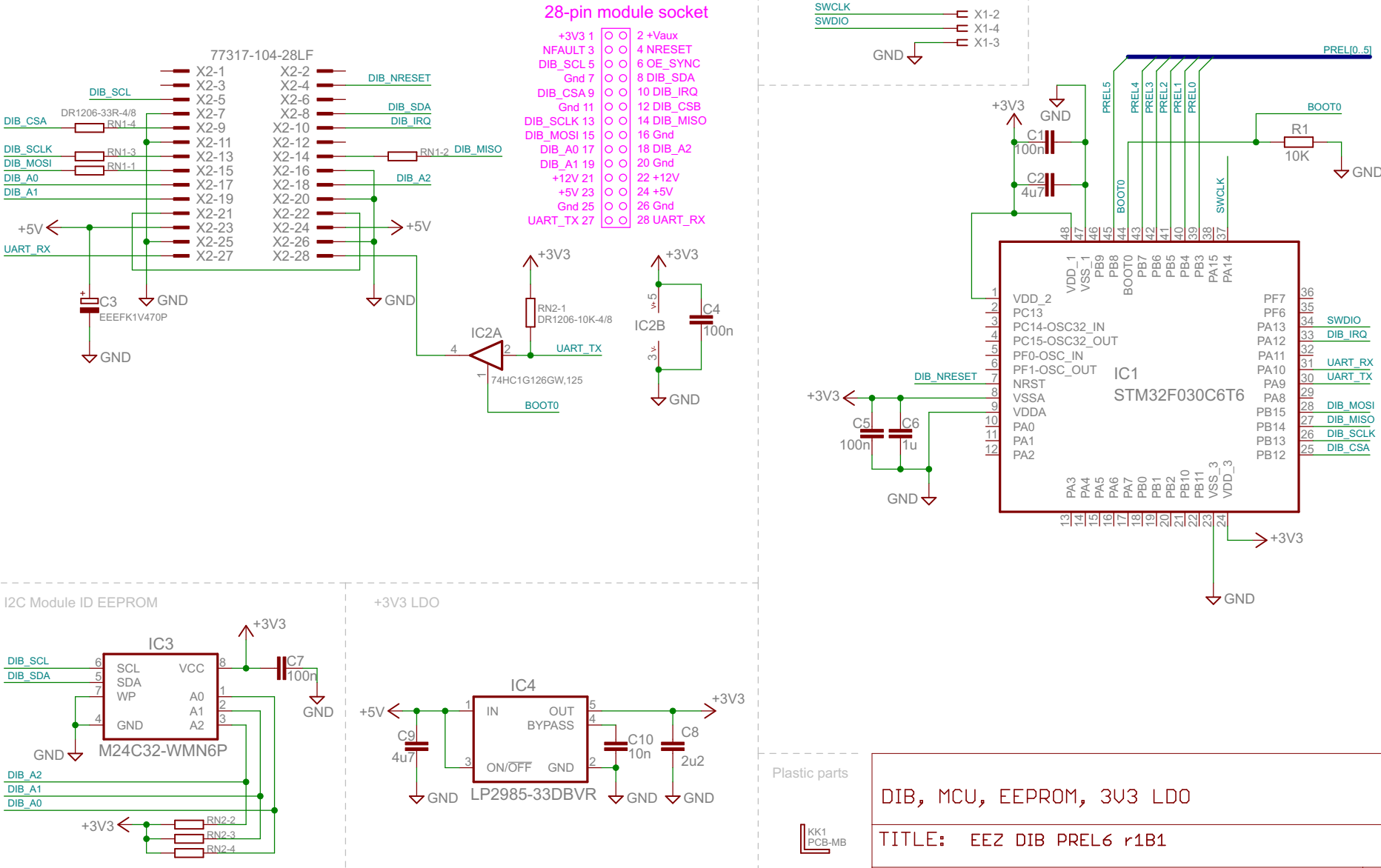

Licensed under the TAPR Open Hardware License (www.tapr.org/OHL)
More info at http://www.envox.hr/eez
Repository: https://github.com/eez-open

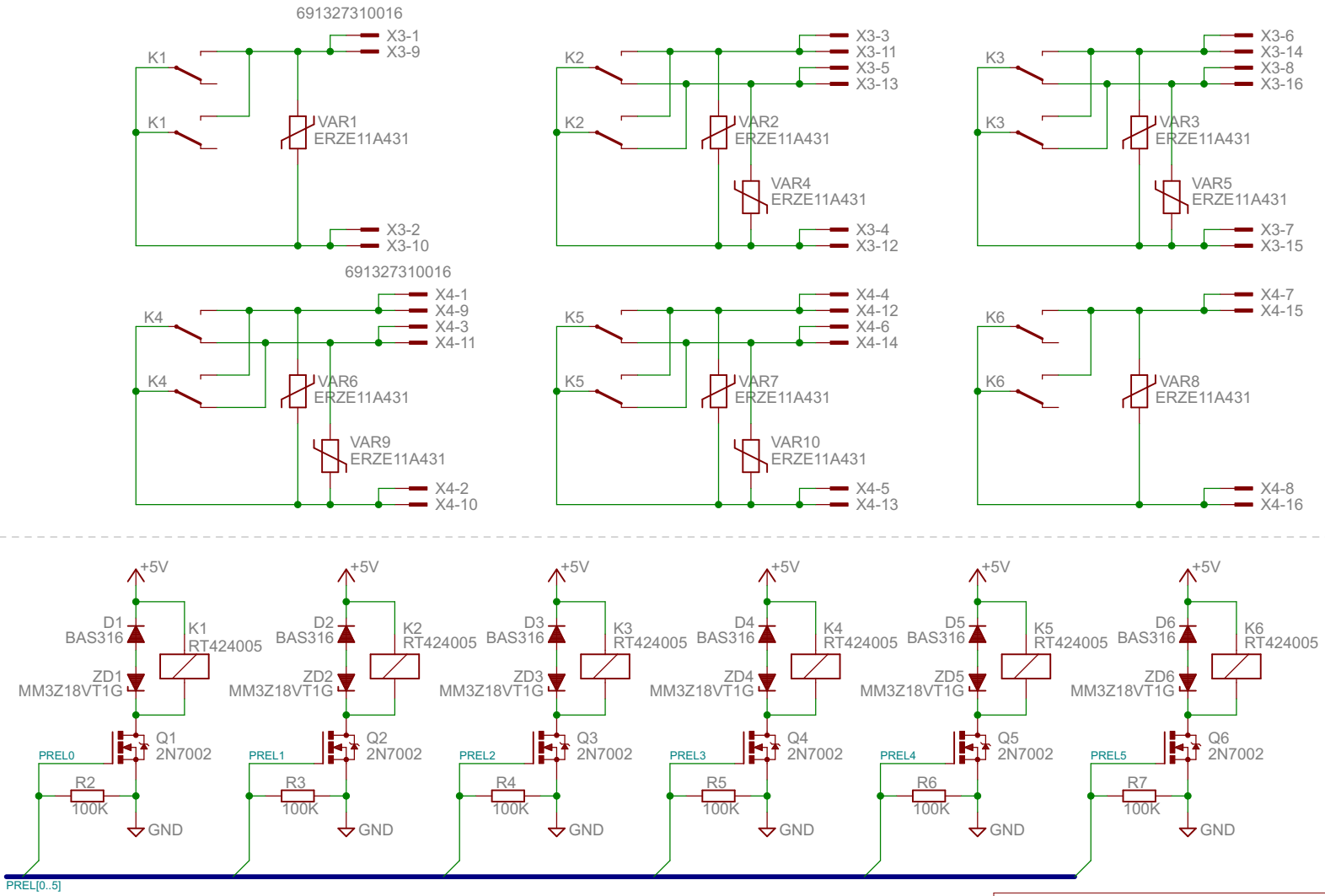

2 x 16-pin front panel connector

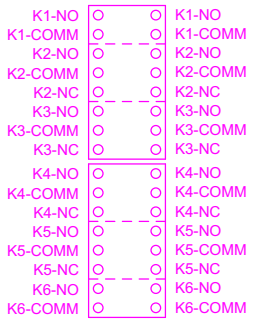

Power relays

TITLE: EEZ DIB PREL6 r1B1

Document Number:

REV:

Date: 29.2.2020. 14:47

Sheet: 2/2

Licensed under the TAPR Open Hardware License (www.tapr.org/OHL)
More info at http://www.envox.hr/eez
Repository: https://github.com/eez-open