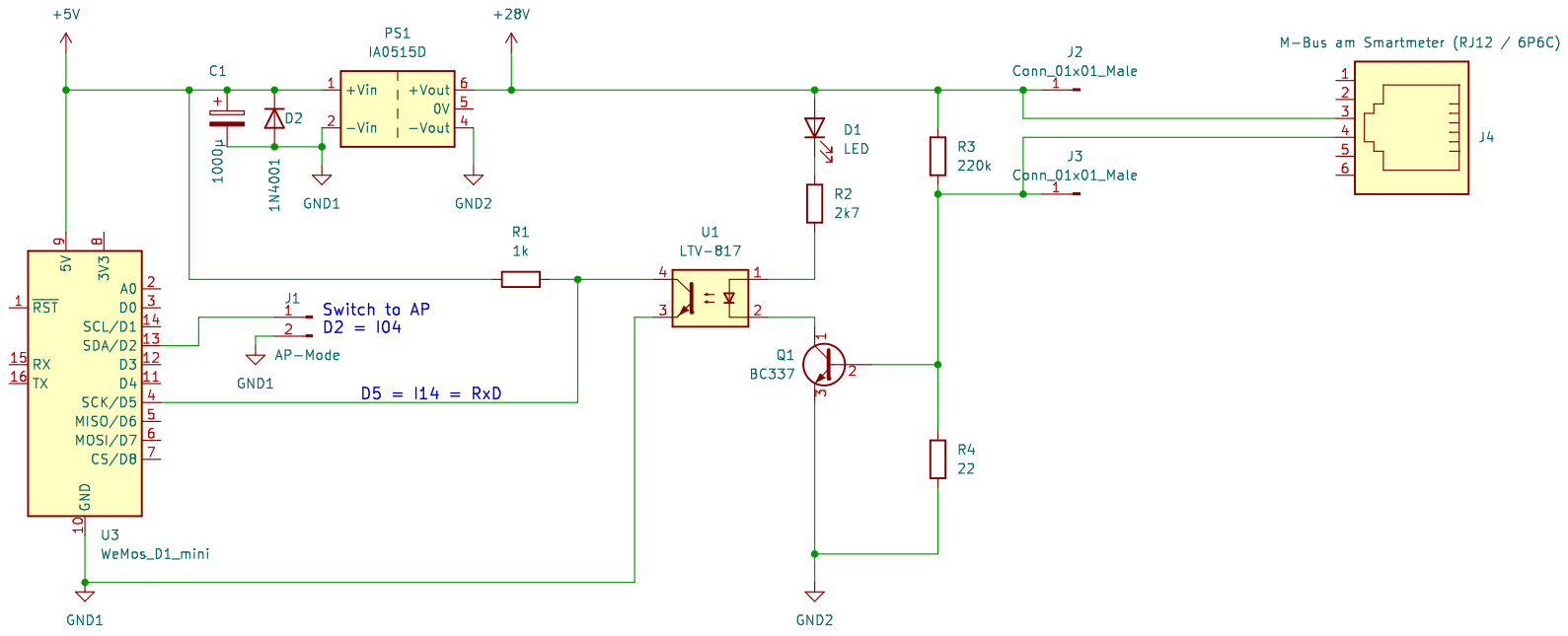

Wemos D1 ESP8266 Modul

Engelbert Horvat

Sheet: /

File: MBus-ESP8266-R2.kicad_sch

Title: MBUS Interface (read only)

Size: A4	Date: 2022-11-18	**Rev: 20.Nov.2022**
KiCad E.D.A. kicad (6.0.9)		Id: 1/1