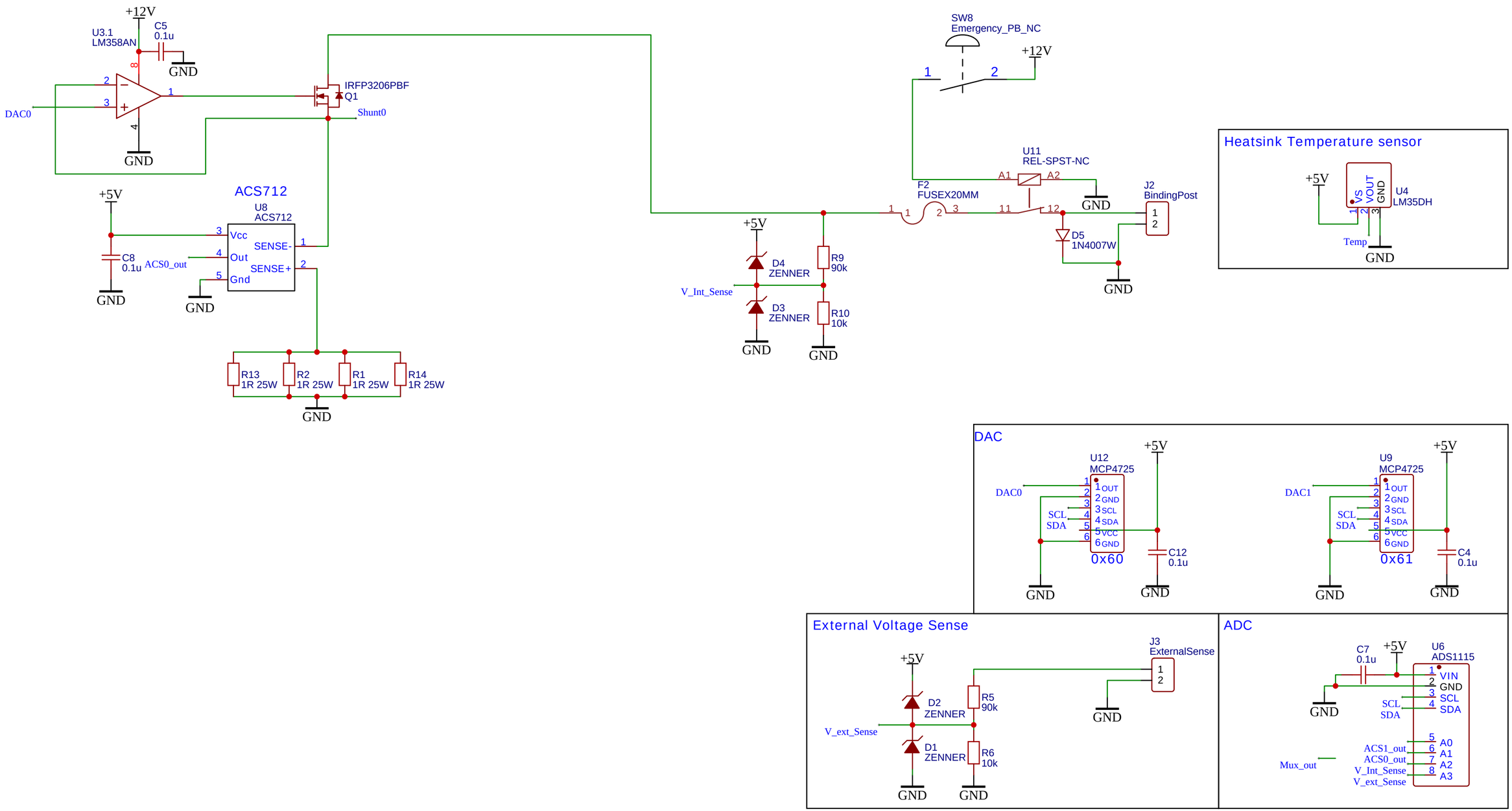

TITLE: Analog Board	REV: 1.2.0
Company: Your Company	Sheet: 1/2
Date: 2022-10-12 Drawn By: eimparas	