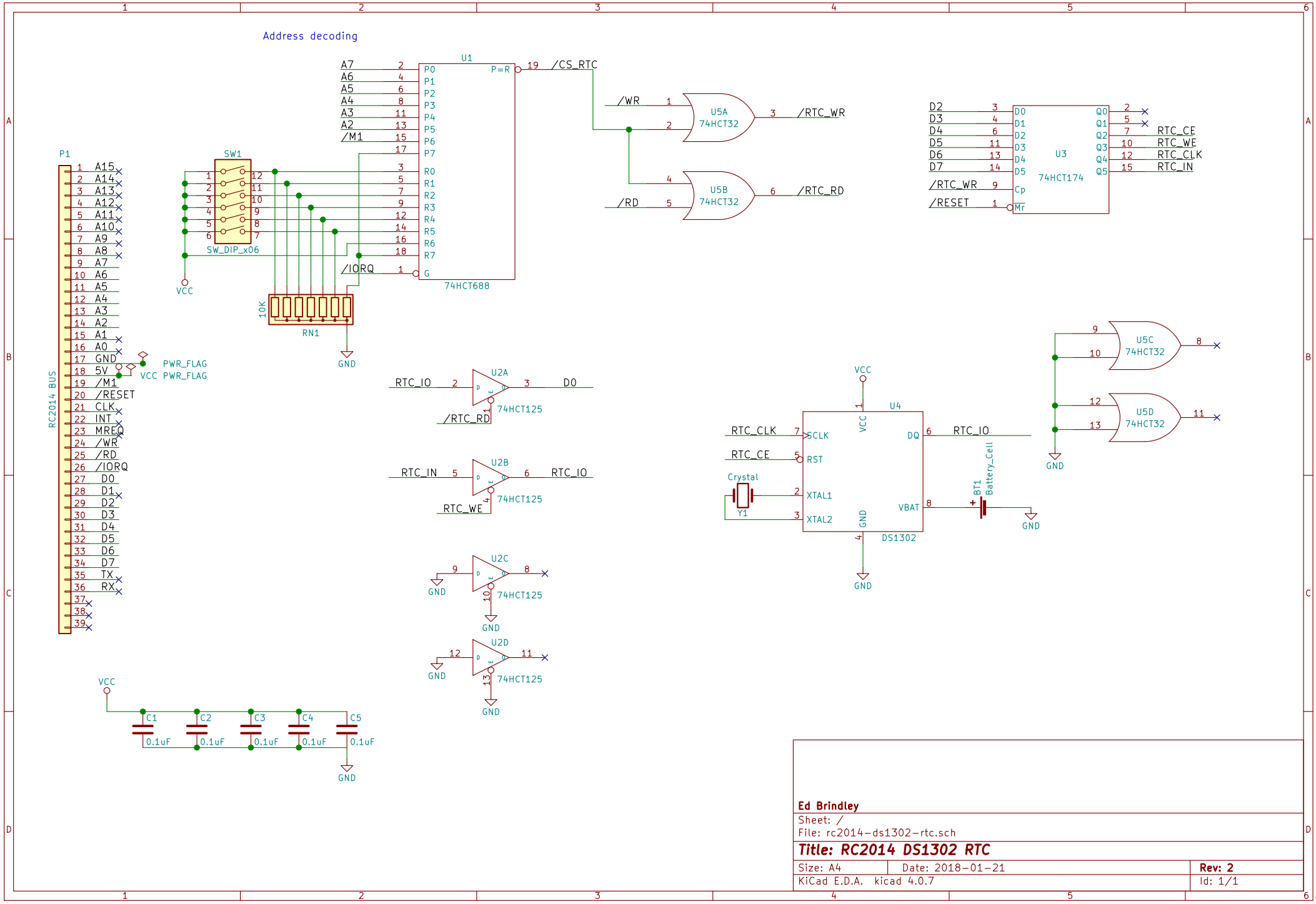

Ed Brindley

Sheet: /

File: rc2014-ds1302-rtc.sch

Title: RC2014 DS1302 RTC

Size: A4	Date: 2018-01-21	Rev: 2
KiCad E.D.A. kicad 4.0.7		Id: 1/1