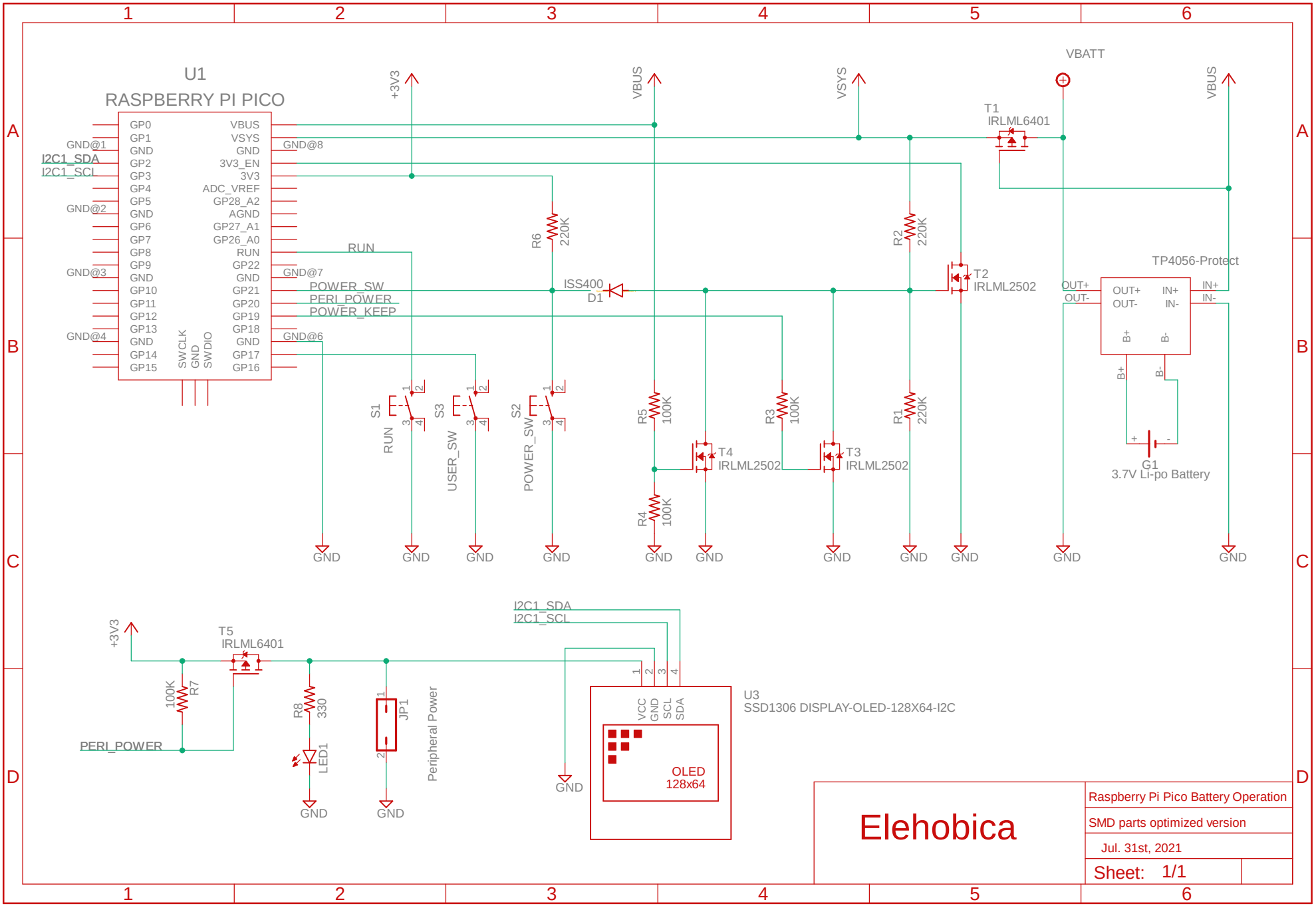
U1
RASPBERRY PI PICO
GP0
GP1
GND
GP2
GP3
GP4
GP5
GND
GP6
GP7
GP8
GP9
GND
GP10
GP11
GP12
GP13
GND
GP14
GP15
VBUS
VSYS
GND
3V3_EN
3V3
ADC_VREF
GP28_A2
AGND
GP27_A1
GP26_A0
RUN
GP22
GND
GP21
GP20
GP19
GP18
GND
GP17
GP16
SWCLK
GND
SWDIO
GND@1
I2C1_SDA
I2C1_SCL
GND@2
GND@3
GND@4
GND@8
GND@7
GND@6
POWER_SW
PERI_POWER
POWER_KEEP
+3V3
VBUS
VSYS
VBATT
T1
IRLML6401
R6
220K
R2
220K
ISS400
D1
T2
IRLML2502
TP4056-Protect
OUT+
OUT-
IN+
IN-
B+
B-
G1
3.7V Li-po Battery
S1
RUN
S3
USER_SW
S2
POWER_SW
R5
100K
R4
100K
R3
100K
R1
220K
T4
IRLML2502
T3
IRLML2502
GND
T5
IRLML6401
100K
R7
R8
330
LED1
JP1
Peripheral Power
PERI_POWER
U3
SSD1306 DISPLAY-OLED-128X64-I2C
VCC
GND
SCL
SDA
OLED
128x64
Elehobica
Raspberry Pi Pico Battery Operation
SMD parts optimized version
Jul. 31st, 2021
Sheet: 1/1