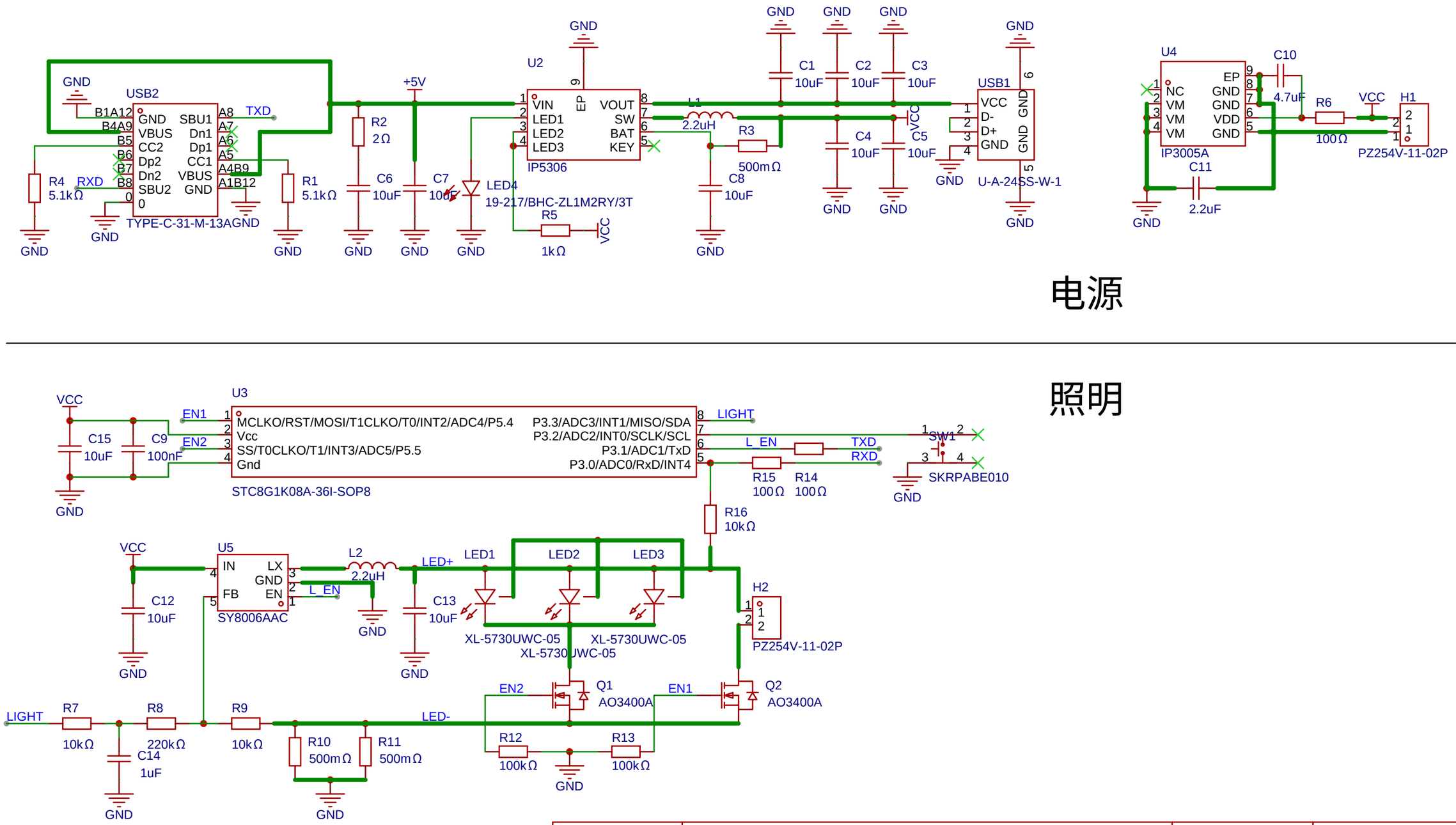

Schematic	Schematic1	Update Date	2023-02-02
		Create Date	2023-01-14
Page	P1	Part Number	
Drawed		FlashLight	
Reviewed			
		VER	SIZE	PAGE 1 OF 1
嘉立创EDA		V1.0	A4	嘉立创EDA