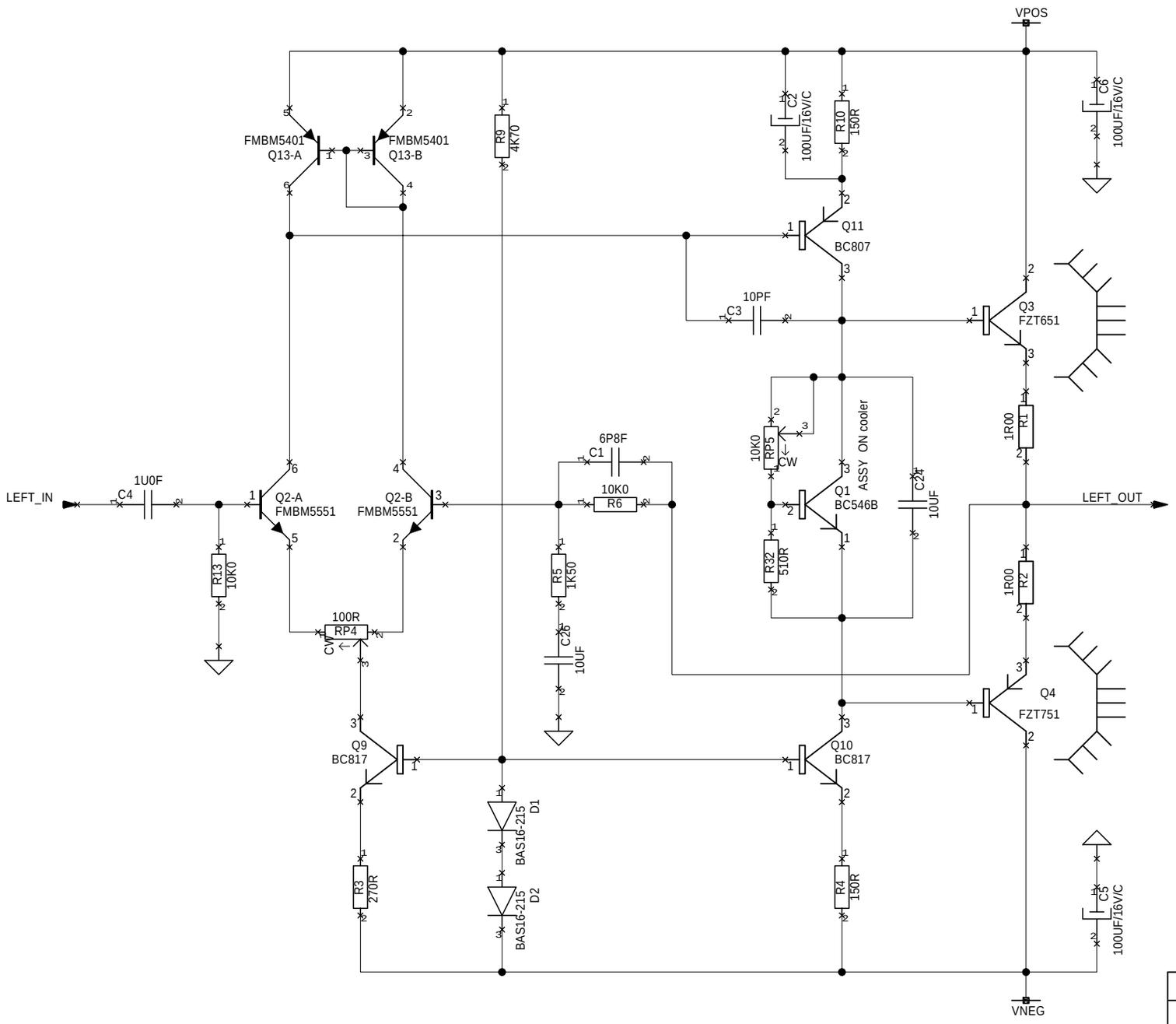


| | |
|---|---|
| PROJECT: | Discrete Power-OPAMP |
| DRAWING: | IMPROVED VERSION |
| DATE:2018_02_08 | UNIVERSITY OF OSLO |
| VER: 1.0 | Dept. of Physics |
| SHEET: 1 : 1 | (c) copyright. All rights reserved. |
| S. Lyng Nielsen | |