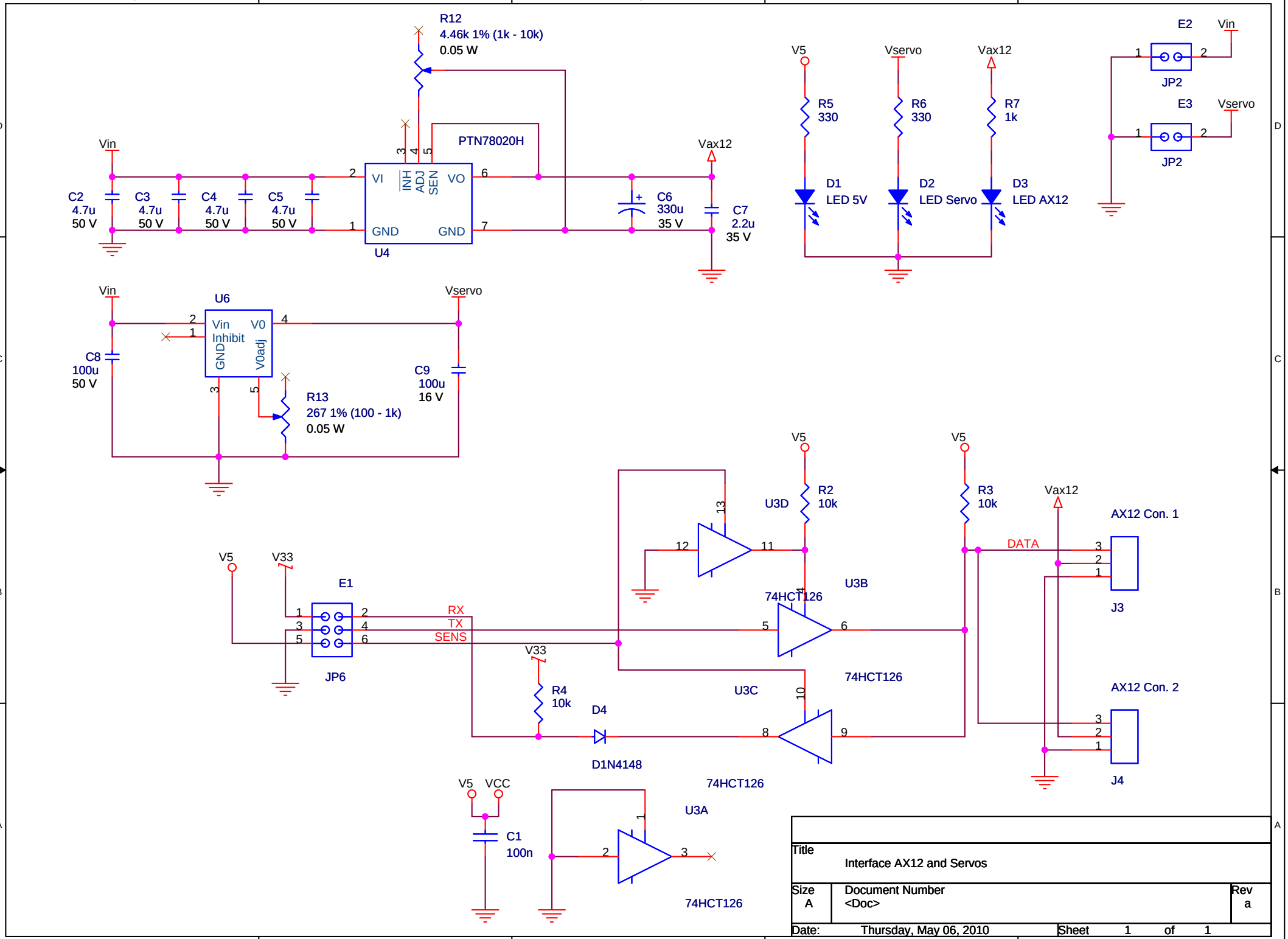
R12
4.46k 1% (1k - 10k)
0.05 W
PTN78020H
Vin
C2
4.7u
50 V
C3
4.7u
50 V
C4
4.7u
50 V
C5
4.7u
50 V
VI
INH
ADJ
SEN
VO
GND
GND
U4
C6
330u
35 V
C7
2.2u
35 V
Vax12
V5
Vservo
Vax12
R5
330
R6
330
R7
1k
D1
LED 5V
D2
LED Servo
D3
LED AX12
E2
Vin
JP2
E3
Vservo
JP2
Vin
U6
Vin
Inhibit
V0
GND
V0adj
Vservo
C8
100u
50 V
C9
100u
16 V
R13
267 1% (100 - 1k)
0.05 W
V5
V33
E1
JP6
RX
TX
SENS
V33
R4
10k
D4
D1N4148
U3D
R2
10k
U3B
74HCT126
U3C
74HCT126
V5
R3
10k
Vax12
DATA
AX12 Con. 1
J3
AX12 Con. 2
J4
V5
VCC
C1
100n
U3A
74HCT126
74HCT126
Title
Interface AX12 and Servos
Size
A
Document Number
<Doc>
Rev
a
Date:
Thursday, May 06, 2010
Sheet
1
of
1