5V TO 3V3@100mA

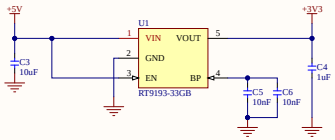

CH340E

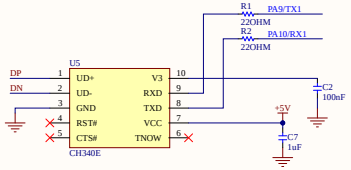

RS485

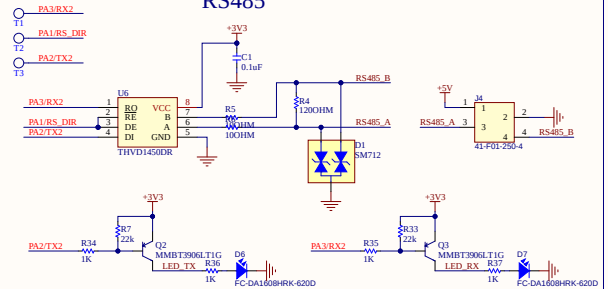

MODULE LCD OLED I2C

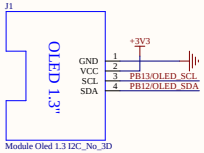

USB Type C

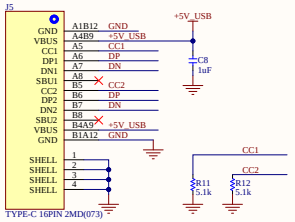

STM32L151C8T6

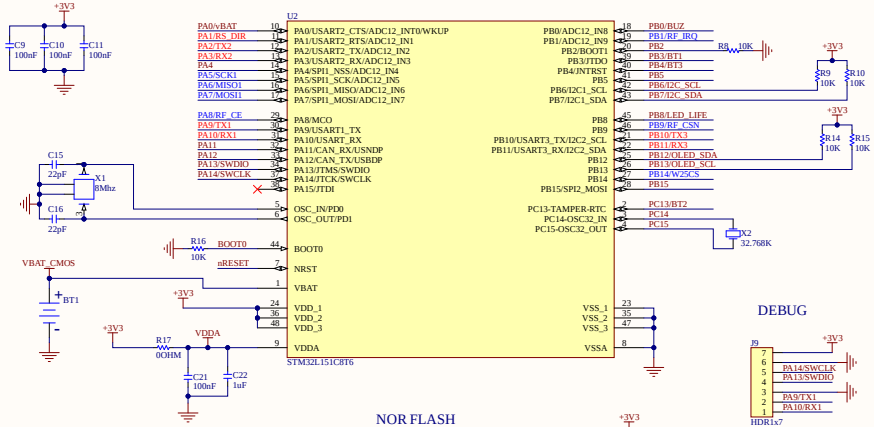

DEBUG

NOR FLASH

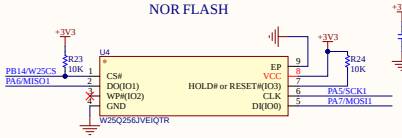

Test Point nRF

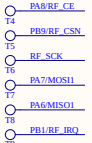

NRF24L01

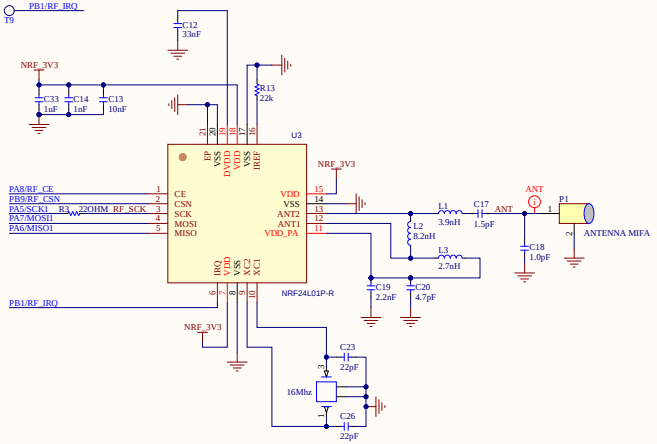

Battery Management BQ24074

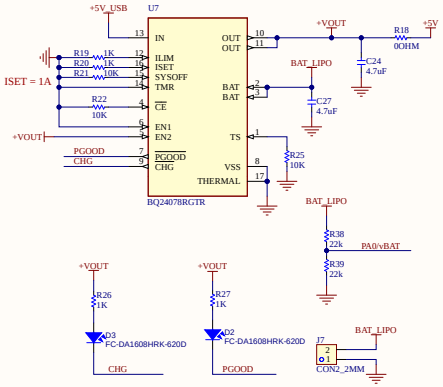

Test Point vBAT

RESET

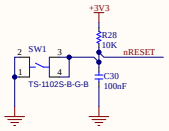

BUTTON

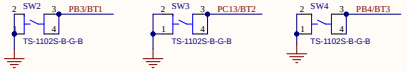

LED & BUZZER

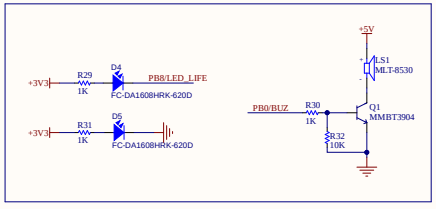

GROVE UART

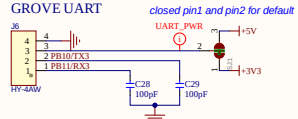

GROVE I2C

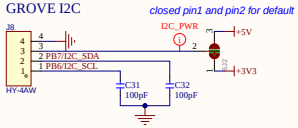

STM32 PINOUT

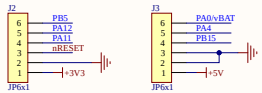

Mounting Hole

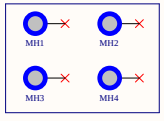

Logo STM32

Logo EPCB

ESD

Logo Grove Module

Dev Board STM32		
Title: Dev Board STM OLED 2.0.PrjPcb		
Page Contents:		
Size:	DWG NO: *	Revision: *
Date: 10:42:22 10/11/2022	Sheet 1 of 1	

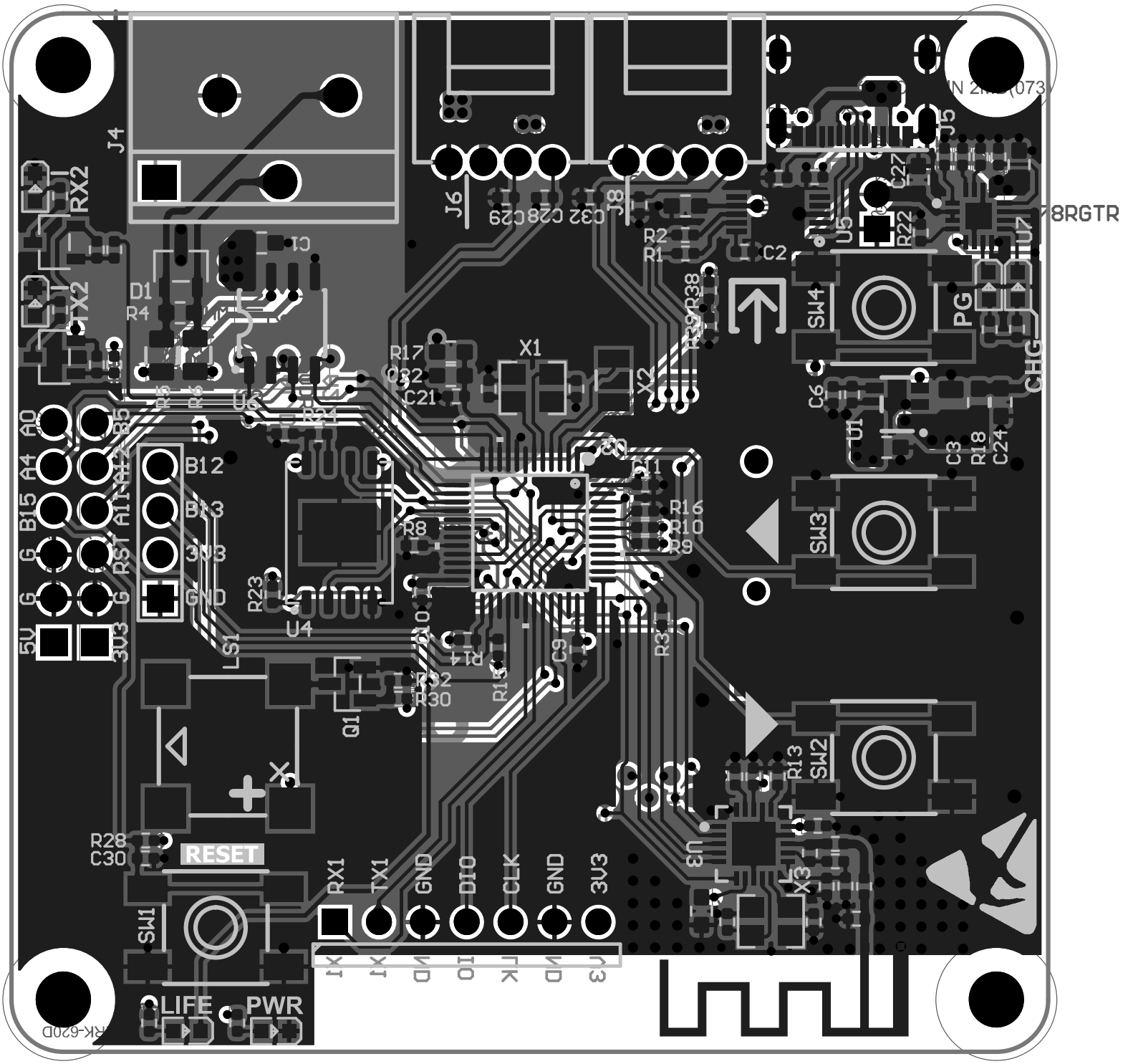

J4
RX2
TX2
D1
R4
C1
J6
C29
C28
C32
J8
R2
R1
C2
U5
R22
C27
J5
78RGTR
U7
SW4
PG
CHG
R38
R39
X1
X2
R17
C32
C21
R24
U6
A0
A4
B15
G
G
5V
3V3
B5
A12
A11
RST
G
B12
B13
3V3
GND
R23
U4
LS1
R8
R16
R10
R9
C6
U1
C3
R18
C24
SW3
R14
R13
C9
R3
R32
R30
Q1
R13
SW2
U3
X3
R28
C30
RESET
SW1
RX1
TX1
GND
DIO
CLK
GND
3V3
LIFE
PWR
RK-620D

Dev Board STM OLED 2.0.PrjPcb

	Comment	Designa	Footprint	LCSC Part Num	Manufacturer Part Numbe	Manufacturer	Quant	Description	Assembly Type	Link
1	CR1220-2ZX	BT1	BAT_CR1220_SMD	C969906	CR1220-2ZX	Q&J	1	SMD Battery Holders, Clips	SMT Assembly	
2	0.1uF	C1	C_0603	C14663	CC0603KRX7R9BB104	YAGEO	1	100NF 50V 0603 ROHS	SMT Assembly	
3	100nF	C2, C9, C	C_0402	C41851	0402B104K160NT	FH(Guangdong Fenghua Advanced	7	100nF 16V X7R ±10% 0402	SMT Assembly	
4	10uF	C3	C_0805	C15850	CL21A106KAYNNNE	Samsung Electro-Mechanics	1	10UF 25V 0805 ROHS	SMT Assembly	
5	1uF	C4, C7, C	C_0603	C15849	CL10A105KB8NNNC	Samsung Electro-Mechanics	5	1UF 50V 0603 ROHS	SMT Assembly	
6	10nF	C5, C6, C	C_0402	C1547	0402CG120J500NT	FH(Guangdong Fenghua Advanced	3	10nF 50V X7R ±10% 0402	SMT Assembly	
7	33nF	C12	C_0402	C106862	CC0402KRX7R9BB333	YAGEO	1	50V 33nF X7R ±10% 0402	SMT Assembly	
8	1nF	C14	C_0402	C1523	0402B102K500NT	FH(Guangdong Fenghua Advanced	1	1nF 50V X7R ±10% 0402 M	SMT Assembly	
9	22pF	C15, C16	C_0402	C1555	0402CG220J500NT	FH(Guangdong Fenghua Advanced	4	22pF 50V C0G ±5% 0402 M	SMT Assembly	
10	1.5pF	C17	C_0402	C1552	0402CG1R5C500NT	FH(Guangdong Fenghua Advanced	1	1.5pF 50V C0G ±0.25pF 04	SMT Assembly	
11	1.0pF	C18	C_0402	C1550	0402CG1R0C500NT	FH(Guangdong Fenghua Advanced	1	1.0pF 50V C0G ±5% 0402	SMT Assembly	
12	2.2nF	C19	C_0402	C1531	0402B222K500NT	FH(Guangdong Fenghua Advanced	1	2.2nF 50V C0G ±5% 0402	SMT Assembly	
13	4.7pF	C20	C_0402	C1569	0402CG4R7C500NT	FH(Guangdong Fenghua Advanced	1	4.7pF 50V C0G ±5% 0402	SMT Assembly	
14	4.7uF	C24, C27	C_0603	C19666	CL10A475KO8NNNC	Samsung Electro-Mechanics	2	4.7UF 16V 0603 ROHS	SMT Assembly	
15	100pF	C28, C29	C_0402	C1546	0402CG101J500NT	FH(Guangdong Fenghua Advanced	4	100pF 50V C0G ±5% 0402	SMT Assembly	
16	SM712	D1	SOT-23-3_L2.9-W1.6-P	C502564	SM712	MDD（Microdiode Electronics）	1	TVS DIODE 12V 21V SOT	SMT Assembly	
17	FC-DA1608HRK-620D	D2, D3, D	LED0603-RD_RED	C84263	FC-DA1608HRK-620D	NATIONSTAR	6	LED Red 0603 Light Emitti	SMT Assembly	
18	Module Oled 1.3 I2C_No	J1	Module Oled 1.3 - No 3D	N/A	N/A	EPCB.vn	1	Module Oled 1.3 I2C	Hand Soldering	
19	41-F01-250-4	J4	CONN-TH_41-F01-250-	C173392	41-F01-250-4	HIWA	1	Terminal Block 4 0.138"（	Hand Soldering	
20	TYPE-C 16PIN 2MD(073	J5	USB-C-SMD_TYPE-C1	C2765186	TYPE-C16PIN	SHOU HAN	1	5A 1 Surface Mount 16 Fer	SMT Assembly	
21	HY-4AW	J6, J8	CONN-TH_4P-P2.00_H	C146068	HY-4AW	BOOMELE	2	HY-4AW 1x4P 1 2mm 4 Pu	Hand Soldering	
22	CON2_2MM	J7	CONN-TH_2P-P2.00_X	C388730	X2016WV-02K-N0SN	XKB Connectivity	1	PH Header Male Pin 0.079"	Hand Soldering	
23	HDR1x7	J9	HDR1X7H		HDR1x7 Horizonal		1	Header IDC, 1x8 Pin horizo	Hand Soldering	
24	3.9nH	L1	L_0402	C317939	FHW0402UC3N9JST	FH(Guangdong Fenghua Advanced	1	3.9nH 840mA ±5% 66mΩ (	SMT Assembly	
25	8.2nH	L2	L_0402	C317946	FHW0402UC8N2JST	FH(Guangdong Fenghua Advanced	1	8.2nH 680mA ±5% 100mΩ	SMT Assembly	
26	2.7nH	L3	L_0402	C317935	FHW0402UC2N7KST	FH(Guangdong Fenghua Advanced	1	2.7nH 640mA ±10% 120m	SMT Assembly	
27	MLT-8530	LS1	BUZ-SMD_4P-L8.5-W8	C94599	MLT-8530	Jiangsu Huaneng Elec	1	BUZZERS MAGNETIC NO	SMT Assembly	
28	MMBT3904	Q1	SOT-23-3_L2.9-W1.3-P	C20526	MMBT3904	Changjiang Electronics Tech (CJ)	1	MMBT3904 TRANSISTORS	SMT Assembly	
29	MMBT3906LT1G	Q2, Q3	SOT-23-3_L2.9-W1.6-P	C53444	MMBT3906LT1G	ON Semicon	2	MMBT3906 TRANSISTORS	SMT Assembly	
30	22OHM	R1, R2, R	R_0402	C25092	0402WGF220JTCE	Uniroyal Elec	3	22Ω 0402 62.5mW Thick F	SMT Assembly	
31	120OHM	R4	R_0603	C22787	0603WAF1200T5E	Uniroyal Elec	1	120OHMS ±1% 1/10W 060	SMT Assembly	
32	10OHM	R5, R6	R_0805	C17415	0805W8F100JT5E	Uniroyal Elec	2	10OHMS ±1% 1/8W 0805	SMT Assembly	
33	22k	R7, R13,	R_0402	C25768	0402WGF2202TCE	Uniroyal Elec	5	22k 0402 62.5mW Thick Fi	SMT Assembly	
34	10K	R8, R9, R	R_0402	C25744	0402WGF1002TCE	Uniroyal Elec	13	10kΩ 0402 62.5mW Thick	SMT Assembly	
35	5.1k	R11, R12	R_0402	C25941	0402WGJ0512TCE	Uniroyal Elec	2	5.1KOHMS ±5% 1/16W 04	SMT Assembly	
36	0OHM	R17, R18	R_0603	C21189	0603WAF0000T5E	Uniroyal Elec	2	0OHMS ±1% 1/10W 0603	SMT Assembly	
37	1K	R19, R20	R_0402	C11702	0402WGF1001TCE	Uniroyal Elec	11	1kΩ 0402 62.5mW Thick F	SMT Assembly	
38	TS-1102S-B-G-B	SW1, SW	SW-SMD_4P-L6.0-W6.	C381064	TS-1102S-C-F-B	XKB Connectivity	4	Botton SMD TACTILE SWI	SMT Assembly	
39	RT9193-33GB	U1	SOT-23-5_L3.0-W1.7-P	C15651	RT9193-33GB	Richtek Tech	1	5.5V 300mV @ 300mA - - F	SMT Assembly	
40	STM32L151C8T6	U2	LQFP-48_L7.0-W7.0-P(	C9861	STM32L151C8T6	STMicroelectronics	1	STM32 ARM-based 32-bit M	SMT Assembly	
41	NRF24L01P-R	U3	QFN-20_L4.0-W4.0-P0.	C8791	NRF24L01P-R	NORDIC	1	NRF24L01P-R SPI QFN-20	SMT Assembly	
42	W25Q256JVEIQTR	U4	WSON-8_L8.0-W6.10-P	C97522	W25Q256JVEIQTR	Winbond Elec	1	W25Q256 WSON-8_8x6m	SMT Assembly	
43	CH340E	U5	MSOP-10_L3.0-W3.0-P0	0.50-LS5.0-BL		WCH(Jiangsu Qin Heng)	1	Transceiver USB 2.0 2Mbp	SMT Assembly	
44	THVD1450DR	U6	SOIC-8_3.9x4.9x1.27P	C2671361	THVD1450DR	Texas Instruments	1	THVD1450DR transceiver	SMT Assembly	
45	BQ24078RGTR	U7	QFN16_3MM	C473396	BQ24078RGTR	Texas Instruments	1	VQFN-16 Battery Managem	SMT Assembly	
46	8Mhz	X1	SMD-3225_4P	C133366	1C208000CE0Q	KDS Daishinku	1	8Mhz 3225 SMD CRYSTAL	SMT Assembly	
47	32.768K	X2	SMD-3215_2P	C32346	Q13FC1350000400	Seiko Epson	1	32.768K SMD CRYSTAL R	SMT Assembly	
48	16Mhz	X3	SMD-3225_4P	C13738	X322516MLB4SI	Yangxing Tech	1	16MHz SMD Crystal Reson	SMT Assembly	