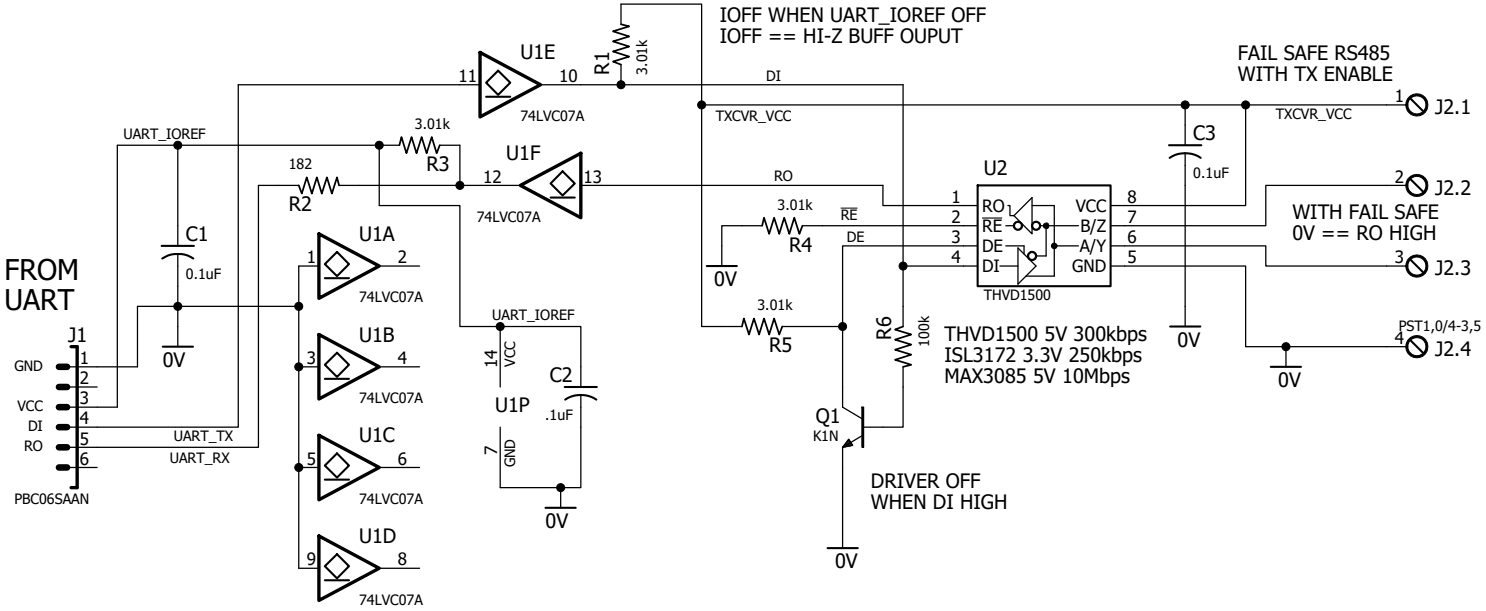

RPU BUS

RPUBUS.ORG
GITHUB.COM/EPCCS

Copyright (C) 2018 Ronald Sutherland
Released under the Creative Commons
Attribution-ShareAlike 4.0 International
(CC BY-SA 4.0)
http://creativecommons.org/licenses/by-sa/4.0/

SIZE A

BK black	GN green	Symbols = RD
BN brown	BU blue	Names = BU
RD red	VT violet	Values = GY
OG orange	GY gray	Label/Info = VT
YE yellow	WH white	Busses = Dark BU
		Net/Wire = GN
		Guide = YE

	DATE:	NAME:
Edit	9/8/18	RON S
Chk		

ADDR: 1627 W INVERNESS DR
TEMPE AZ 85282
E-MAIL: ronald.sutherland@gmail.com
PHONE: (480) 967-2851

Reference Designators:
B Battery
C Capacitor
D Diode
F Fuse/Breaker
H Hardware & Outline
J Connector/Link
K Relay
L Inductor
M Motor (and Related)
P Power supply
Q Transistor
R Resistor
S Switch
T Transformer
TP Test point
U Integrated circuit/module
Y Crystal or oscillator

REV	BUGZILLA ISSUE #	JDATE
^0	INIT	9/8/18

TO:

FROM:

DESCRIPTION: RS485 TXCVR WITH FS TX_EN AND IOFF BUFF

MODEL: 485TX_EN

DRAWING: 18250

1/1

9/8/2018 11:57 PM