REF INFO TO HELP WITH IDEAS:
5W CAN BE DISIPATED FROM A
HEAT SINK WITH VOLUME 3cm^3
WITH CONVECTION AIR FLOW.

20cm^2 BLACK BODY CAN HAVE 1W LOSS
BETWEEN 100C AND 50C SURFACE

Q4 POWER
RDS_ON = 0.065 OHM
(4.8A*0.065)*4.8A = 1.5W

D1 POWER
4.8A*0.5V = 2.4W

R6 POWER RATING IS 1/2W
(4.8A*0.018)*4.8A = 0.41W

12V OR 24V SOLAR
45V OC MAX

HIGH SIDE SWITCH

CURR SENSE

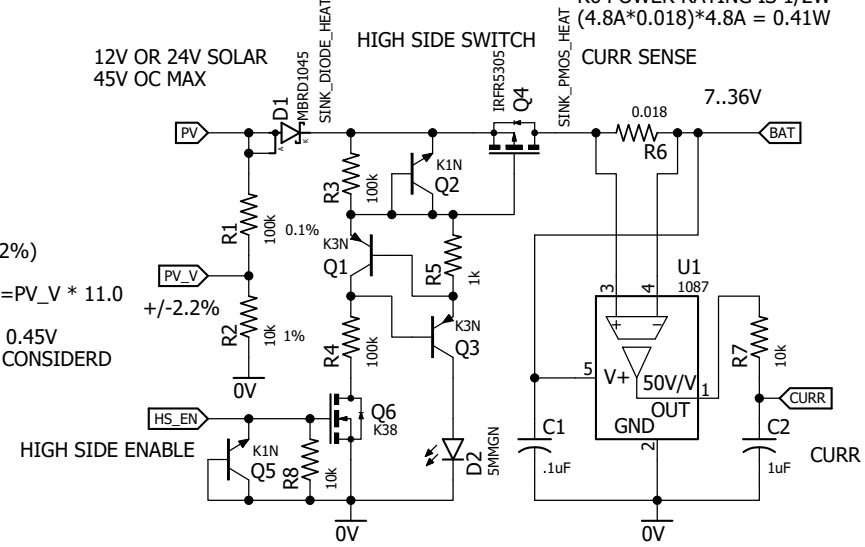

J1.1 1 PV
J1.2 2 BAT
PST1.0,2-3.5

PV_V ERROR
100k /w +/- 100 Ohm
10k /w +/- 100 Ohm
9091 = (100k||10k)
ERR is +/- 200 of 9091 (e.g. 2.2%)
THE ADC READS PV_V
PV = PV_V * (10k+100k)/10k =PV_V * 11.0
WHEN ADC READS 1.86V
PV = 1.86 * 11.0 = 20.46V +/- 0.45V
ADC ERRORS HAVE NOT BEEN CONSIDERD

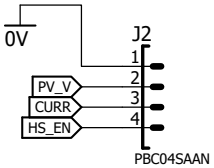

CURRENT I THRU R6
CURR = 50 * (I * 0.018)
I = CURR / (50 * 0.018) = CURR * 1.11
WHEN ADC READS 4.3V
I= 4.3 * 1.11 =4.773A

Reference Designators:
B Battery
C Capacitor
D Diode
F Fuse/Breaker
H Hardware & Outline
J Connector/Link
K Relay
L Inductor
M Motor (and Related)
P Power supply
Q Transistor
R Resistor
S Switch
T Transformer
TP Test point
U Integrated circuit/module
Y Crystal or oscillator

BK black	GN green	Symbols = RD
BN brown	BU blue	Names = BU
RD red	VT violet	Values = GY
OG orange	GY gray	Label/Info = VT
YE yellow	WH white	Busses = Dark BU
		Net/Wire = GN
		Guide = YE

RPU BUS
RPUBUS.ORG
GITHUB.COM/EPCCS

Copyright (C) 2018 Ronald Sutherland
Released under the Creative Commons
Attribution-ShareAlike 4.0 International
(CC BY-SA 4.0)
http://creativecommons.org/licenses/by-sa/4.0/

SIZE A

	DATE:	NAME:
Edit	3/15/18	RON S
Chk		

ADDR: 1627 W INVERNESS DR
TEMPE AZ 85282
E-MAIL: ronald.sutherland@gmail.com
PHONE: (480) 967-2851

REV	BUGZILLA ISSUE #	JDATE
^0	INIT	3/15/18

TO:
FROM:

DESCRIPTION: HIGH SIDE SWITCH WITH CURR SENSE
MODEL: PVSW
DRAWING: 18074
1/1
3/17/2018 12:05 AM